MINNESOTA DEPARTMENT OF TRANSPORTATION
ANOKA COUNTY

CONSTRUCTION PLAN FOR BITUMINOUS RECLAMATION, BITUMINOUS SURFACING

LOCATED ON CSAH 116 BETWEEN LIMONITE ST NW AND BASALT ST NW

BEGIN CP 16-15-116
CSAH 116, STA: 10+38

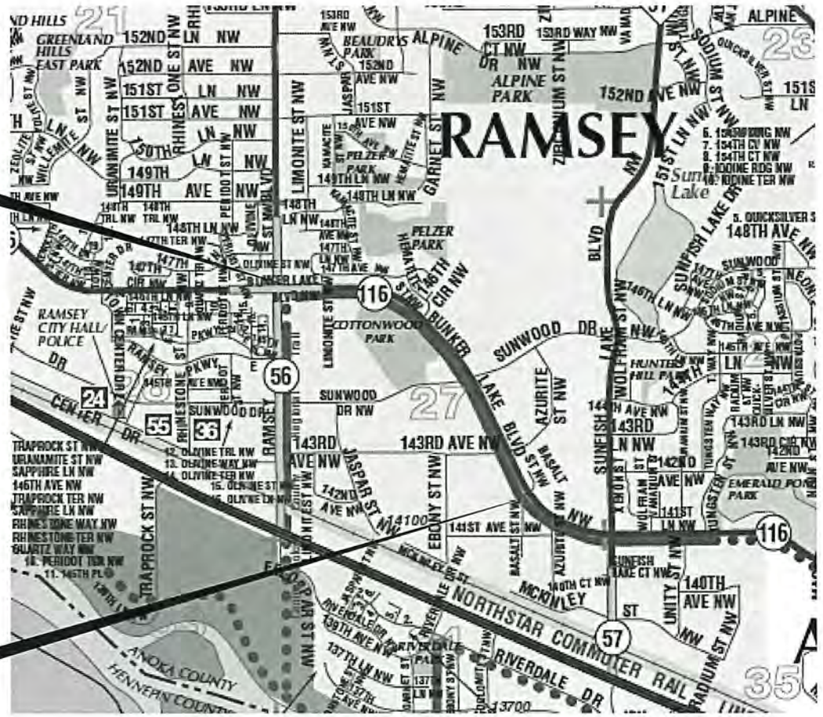

END CP 16-15-116
CSAH 116, STA: 60+72

CSAH 116

GROSS LENGTH	5034 FEET	0.953 MILES
EXCEPTIONS-LENGTH	0.00 FEET	0.000 MILES
NET LENGTH	5034 FEET	0.953 MILES

DESIGN SPEED 55 MPH

CURRENT ADT 7200

PROJECT LOCATION

CITY OF RAMSEY
ANOKA COUNTY
MN/DOT TRANSPORTATION DISTRICT - METRO
SECTION 27
TOWNSHIP 32 NORTH
RANGE 25 WEST

GOVERNING SPECIFICATIONS

THE 2016 EDITION OF THE MINNESOTA DEPARTMENT OF TRANSPORTATION "STANDARD SPECIFICATIONS FOR CONSTRUCTION" SHALL GOVERN. ALL TRAFFIC CONTROL DEVICES SHALL CONFORM AND BE INSTALLED IN ACCORDANCE TO THE "MINNESOTA MANUAL ON UNIFORM TRAFFIC CONTROL DEVICES" (MNMUTCD), AND PART VI, "FIELD MANUAL FOR TEMPORARY TRAFFIC CONTROL ZONE LAYOUTS."

THIS PLAN CONTAINS 23 SHEETS

INDEX

SHEET NO.	DESCRIPTION
1	TITLE SHEET
2	STATEMENT OF ESTIMATED QUANTITIES
3	SUPERELEVATION / GRADE CORRECTION
4 - 5	TYPICAL SECTIONS
6 - 7	DETAILS
8 - 9	CONSTRUCTION PLAN
10 - 18	SIGNING AND STRIPING PLANS
19 - 23	ORIGINAL SIGNAL PLANS

Approved [signature] 4/11/2016
ANOKA COUNTY ENGINEER

NO	DATE	BY	CKD	APPR	REVISION		
					REVISION	03/30/2016	11:01:44 AM

NAME: P:\16-01-00\CSAH_116(RamseyBlvd-BasaltSt)\Base\PROPOSED\PROPOSED.dgn

I HEREBY CERTIFY THAT THIS PLAN WAS PREPARED BY ME OR UNDER MY DIRECT SUPERVISION AND THAT I AM A DULY LICENSED PROFESSIONAL ENGINEER UNDER THE LAWS OF THE STATE OF MINNESOTA.
PRINT NAME: MATTHEW J. JOHN
SIGNATURE: [signature]
DATE: 4/6/2016 LICENSE NO. 51639

DRAWN BY SPH DATE 03/30/2016
DESIGN BY SAT DATE 03/30/2016
CHECKED BY MJJ DATE 03/30/2016

ANOKA COUNTY HIGHWAY DEPT.

COUNTY PROJECT 16-15-116

TITLE SHEET

Sheet 1 of 23 Sheets

mjjohn

STATEMENT OF ESTIMATED QUANTITIES

ITEM NUMBER	ITEM DESCRIPTION	NOTES	UNIT	TOTAL PROJECT QUANTITIES ESTIMATED
2021.501	MOBILIZATION		LUMP SUM	1
2104.503	REMOVE BITUMINOUS DRIVEWAY PAVEMENT	1	SQ YD	1440
2104.513	SAWING BIT PAVEMENT (FULL DEPTH)		LN FT	483
2123.503	MOTOR GRADER	2	HOUR	20
2130.501	WATER		MGAL	144
2211.501	AGGREGATE BASE CLASS 5	3	TON	810
2215.501	FULL DEPTH RECLAMATION		SQ YD	28280
2215.502	HAUL FULL DEPTH RECLAMINATION (LV)	4	CU YD	220
2221.501	SHOULDER BASE AGGREGATE CLASS 5		TON	440
2232.501	MILL BITUMINOUS SURFACE (2.0")	5	SQ YD	146
2357.502	BITUMINOUS MATERIAL FOR TACK COAT		GALLON	1400
2360.501	TYPE SP 12.5 WEARING COURSE MIX (3,B)	1	TON	335
2360.501	TYPE SP 12.5 WEARING COURSE MIX (4,E)		TON	6250
2504.602	ADJUST GATE VALVE	6, 7	EACH	5
2563.601	TRAFFIC CONTROL	8	LUMP SUM	1
2563.613	PORTABLE CHANGEABLE MESSAGE SIGN	9	UNIT DAY	14
2564.531	SIGN PANELS TYPE C		SQ FT	6.25
2581.501	REMOVABLE PREFORMED PAVEMENT MARKING TAPE	10	LN FT	404
2582.501	PAVEMENT MESSAGE PREFORMED THERMOPLASTIC	11	SQ FT	968
2582.502	4" SOLID LINE -EPOXY	12	LN FT	15515
2582.502	4" DOUBLE SOLID LINE -EPOXY	12	LN FT	6465
2582.502	4" BROKEN LINE -EPOXY	12	LN FT	220

CONSTRUCTION NOTES

1	ITEM FOR BITUMINOUS DRIVEWAYS AND STREET APPROACHES. CONTRACTOR IS RESPONSIBILE FOR CONTACTING PROPERTY OWNER 48 HOURS BEFORE STARTING OPERATION.
2	ITEM USED TO MOVE EXCESS RECLAIM MATERIAL AT THE RECLAIM AREA LIMITS TO CREATE A SMOOTH TRANSITION BETWEEN THE PROPOSED AND EXISTING PAVEMENT.
3	AGGREGATE BASE FOR PAVED STREET APPROACHES AND DRIVEWAYS, AND ALSO TO BRING PAVED SHOULDERS UP TO WEAR COURSE PAVING GRADE.
4	TO BE USED AT ENGINEERS DISGRESSION FOR GRADE & PROFILE CORRECTION
5	DETAIL MILLING AROUND MANHOLES, CATCH BASINS, GATE VALVES, AND ALONG CURB LINE IS INCIDENTAL TO THIS ITEM.
6	GATE VALVES TO BE ADJUSTED ONLY AS NECESSARY AS DETERMINED BY THE ENGINEER.
7	EACH ADJUST GATE VALVE INCLUDES TEMPORARY ADJUSTMENT BELOW RECLAIM / AGGREGATE BASE ELEVATION PRIOR TO OR IN CONJUNCTION WITH RECLAIMING OPERATION, AND FINAL ADJUSTMENT TO FINISH GRADE BETWEEN PAVING BASE AND WEAR LIFTS.
8	ALL TRAFFIC CONTROL DEVICES SHALL CONFORM TO, AND BE INSTALLED IN ACCORDANCE WITH, THE MOST CURRENT REVISION OF THE "**MINNESOTA MANUAL ON UNIFORM TRAFFIC CONTROL DEVICES**." DO NOT PASS, PASS WITH CARE, NO CENTER STRIPE, AND STOP HERE ON RED SIGNS SHALL BE REPLACED WHENEVER PAVEMENT MARKINGS ARE NOT PRESENT.
9	2 MESSAGE BOARDS, ONE ON THE EACH END OF PROJECT WILL BE INSTALLED 7 DAYS PRIOR TO ANY CONSTRUCTION; REFERENCE STRIPING PLAN FOR DETAILS.
10	CENTERLINE AND LANE DESIGNATION SKIPS TO BE APPLIED AS SOON AS POSSIBLE ON EACH NEW LIFT OF PAVEMENT; SKIPS MUST BE INPLACE BEFORE THE CONTRACTOR LEAVES FOR THE DAY. CONTRACTOR IS TO REMOVE PRIOR TO FINAL PAINT STRIPING.
11	INCLUDES ANY THERMOPLASTIC STOP BARS, GORE AREA HATCHING, CROSSWALKS, LANE DESIGNATION ARROWS, AND PAVEMENT MESSAGES.
12	FINAL STRIPING SHALL BE INSTALLED WITHIN 72 HOURS OF COMPLETION OF MAINLINE WEAR COURSE PAVING.

BASIS OF PLANNED QUANTITIES

2357	BITUMINOUS MATERIAL FOR TACK COAT	0.05 GAL / SQ YD
2211	AGGREGATE BASE CLASS 5	1.8 TONS / CU YD
2360	ALL BITUMINOUS PAVEMENT	115 LBS / SQ YD / IN
2581	REMOVABLE PREFORM PAVEMENT MARKING TAPE	2' AT 50' INTERVALS

NO	DATE	BY	CKD	APPR	REVISION		
						03/30/2016	11:19:14 AM

NAME: P:\16-01-00\CSAH_116(RamsayBlvd-BasaltSt)\Base\PROPOSED\PROPOSED.dgn

I HEREBY CERTIFY THAT THIS PLAN WAS PREPARED BY ME OR UNDER MY DIRECT SUPERVISION AND THAT I AM A DULY LICENSED PROFESSIONAL ENGINEER UNDER THE LAWS OF THE STATE OF MINNESOTA.

PRINT NAME: MATTHEW J. JOHN

SIGNATURE: Matthew J. John

DATE: 4/6/2016 LICENSE NO. 51639

DRAWN BY SPH DATE 03/30/2016

DESIGN BY SAT DATE 03/30/2016

CHECKED BY MJJ DATE 03/30/2016

ANOKA COUNTY

ANOKA COUNTY HIGHWAY DEPT.

COUNTY PROJECT 16-15-116

STATEMENT OF ESTIMATED QUANTITIES

Sheet 2 of 23 Sheets

GRADE CORRECTION / SUPERELEVATION TAB

STATION	FAR LT	OFFSET FROM 12' LT	GRADE	12' LT	GRADE	CLASS-5 CL (MAINLINE)	CLASS-5 CL (GORE)	GRADE	12' RT	GRADE	OFFSET FROM 12' RT	FAR RT		NOTE
12+00	881.69	9.5	-4.0%	882.07	-1.0%	882.19	882.03	-2.0%	881.79	-3.0%	7.5	881.57	EXISTING GRADES PROVIDED FOR REFERENCE	
12+50	881.35	9.89	-4.0%	881.75	-1.0%	881.87	881.73	-2.0%	881.49	-3.0%	8.1	881.25		
13+00	881.04	10.27	-4.0%	881.45	-1.0%	881.57	881.44	-2.0%	881.20	-3.3%	8.7	880.92		
13+50	880.59	10.66	-4.0%	881.02	-1.0%	881.14	881.03	-2.0%	880.79	-3.5%	9.2	880.47		
14+00	879.87	11.04	-4.0%	880.31	-0.8%	880.40	880.31	-2.0%	880.07	-3.0%	9.8	879.78		BEGIN SUPER LT
14+50	879.36	11.43	-4.0%	879.82	-0.5%	879.88	879.80	-2.0%	879.56	-3.0%	10.4	879.25		
15+00	878.56	11.81	-3.5%	878.97	-0.3%	879.00	878.95	-2.0%	878.71	-3.0%	11.0	878.38		
15+50	877.93	12.20	-3.0%	878.29	-0.2%	878.31	878.25	-2.4%	877.96	-3.0%	11.5	877.61		BEGIN SUPER RT
16+00	877.51	12.58	-1.5%	877.70	0.5%	877.64	877.57	-3.5%	877.15	-3.0%	12.1	876.79		
16+50	877.12	12.97	0.5%	877.06	1.0%	876.94	876.91	-3.8%	876.46	-4.0%	12.7	875.95		
17+00	876.53	13.35	1.5%	876.33	1.5%	876.15	876.14	-4.0%	875.66	-4.0%	13.3	875.13		
17+19	876.38	13.5	2.0%	876.11	2.0%	875.87		-4.0%	875.39	-4.1%	13.5	874.84		PC
17+50	876.24	13.5	2.5%	875.90	3.5%	875.48		-4.2%	874.98	-5.0%	13.5	874.30		
18+00	875.62	13.5	2.9%	875.23	4.3%	874.72		-5.5%	874.06	-5.5%	13.5	873.32		
18+50	875.11	13.5	3.5%	874.64	5.5%	873.98		-6.0%	873.26	-6.0%	13.5	872.45		BEGIN FULL SUPER
19+00	874.39	13.5	4.0%	873.85	6.0%	873.13		-6.5%	872.35	-6.0%	13.5	871.54		
19+50	873.62	13.5	4.0%	873.08	6.0%	872.36		-6.5%	871.58	-6.0%	13.5	870.77		
20+00	872.98	13.5	4.0%	872.44	6.0%	871.72		-6.5%	870.94	-6.0%	13.5	870.13		
20+50	872.31	13.5	4.0%	871.77	6.0%	871.05		-6.5%	870.27	-6.0%	13.5	869.46		
21+00	871.72	13.5	4.0%	871.18	6.0%	870.46		-6.5%	869.68	-6.0%	13.5	868.87		
21+50	871.21	13.5	4.0%	870.67	6.0%	869.95		-6.5%	869.17	-6.0%	13.5	868.36		
22+00	870.86	13.5	4.0%	870.32	5.5%	869.66		-6.5%	868.88	-5.5%	13.5	868.14		
22+50	870.76	13.5	4.0%	870.22	5.5%	869.56		-6.5%	868.78	-5.5%	13.5	868.04		
23+00	870.81	13.5	4.0%	870.27	5.3%	869.64		-6.5%	868.86	-5.5%	13.5	868.12		
23+50	871.17	13.5	4.0%	870.63	5.3%	869.99		-6.5%	869.21	-5.5%	13.5	868.47		
24+00	871.42	13.5	4.0%	870.88	5.3%	870.24		-6.5%	869.46	-5.5%	13.5	868.72		
24+38	871.62	13.5	4.0%	871.08	5.3%	870.44		-6.5%	869.66	-5.5%	13.5	868.92		BEGIN BYPASS
24+50	871.68	13.5	4.0%	871.14	5.3%	870.50		-6.5%	869.72	-5.5%	13.5	868.98		END FULL SUPER
25+00	871.92	13.5	3.5%	871.45	5.0%	870.85		-6.0%	870.13	-5.3%	13.5	869.42		
25+50	872.15	13.5	3.0%	871.74	4.5%	871.20		-5.5%	870.54	-4.8%	13.5	869.89		
26+00	872.12	13.5	1.8%	871.89	3.8%	871.43		-4.8%	870.86	-4.0%	13.5	870.32		
26+50	872.13	13.5	1.5%	871.93	2.9%	871.58		-4.0%	871.10	-3.5%	13.5	870.63		
26+51	871.94	13.5	0.8%	871.84	2.1%	871.59		-4.0%	871.11	-3.5%	13.5	870.64		PT
27+00	871.90	13.5	0.0%	871.90	1.5%	871.72		-3.3%	871.33	-3.5%	13.5	870.86		
27+50	871.59	13.5	-1.0%	871.72	0.3%	871.69		-2.9%	871.34	-3.5%	13.5	870.87		
28+00	871.28	13.5	-1.8%	871.52	-0.9%	871.62		-2.0%	871.38	-3.5%	13.5	870.91		END SUPER RT
28+24	871.24	13.5	-2.1%	871.52	-1.0%	871.64		-2.0%	871.40	-3.5%	13.5	870.93		BEGIN RTL (LT)
28+50	870.93	13.5	-2.5%	871.27	-1.3%	871.42		-2.0%	871.18	-3.0%	13.5	870.78		
29+00	870.67	13.5	-2.0%	870.94	-2.0%	871.18		-2.0%	870.94	-2.8%	13.5	870.57		END SUPER LT
29+50	870.43	13.5	-2.0%	870.70	-2.0%	870.94		-2.0%	870.70	-2.0%	13.5	870.43		
30+00	870.17	13.5	-2.0%	870.44	-2.0%	870.68		-2.0%	870.44	-2.0%	13.5	870.17		
30+50	869.70	13.5	-2.0%	869.97	-2.0%	870.21		-2.0%	869.97	-2.0%	13.5	869.70		BEGIN SUPER LT
30+64	869.63	13.5	-1.5%	869.84	-1.7%	870.04		-2.0%	869.80	-2.0%	13.5	869.53		END BYPASS
31+00	869.38	13.5	-1.5%	869.58	-1.5%	869.76		-2.0%	869.52	-2.0%	13.5	869.25		BEGIN SUPER RT
31+50	869.10	13.5	-1.0%	869.23	-1.0%	869.35		-2.5%	869.05	-2.8%	13.5	868.68	GRADES PROVIDED FOR GRADE AND SUPER CORRECTION	

GRADE CORRECTION / SUPERELEVATION TAB

STATION	FAR LT	OFFSET FROM 12' LT	GRADE	12' LT	GRADE	CLASS-5 CL (MAINLINE)	CLASS-5 CL (GORE)	GRADE	12' RT	GRADE	OFFSET FROM 12' RT	FAR RT		NOTE
32+00	868.69	13.5	-0.5%	868.76	-0.5%	868.82		-2.9%	868.47	-3.3%	13.5	868.03	GRADES PROVIDED FOR GRADE AND SUPER CORRECTION	
32+50	868.54	13.5	0.8%	868.44	0.8%	868.35		-3.1%	867.98	-3.7%	13.5	867.48		
32+90	868.42	13.5	1.3%	868.25	1.5%	868.07		-3.8%	867.62	-4.3%	13.5	867.05		PC
33+00	868.50	13.5	1.8%	868.26	2.1%	868.01	867.97	-4.0%	867.49	-4.0%	13.5	866.95		
33+04	868.46	13.5	1.8%	868.22	2.1%	867.97	867.93	-4.0%	867.45	-4.0%	13.5	866.91		END RTL (LT)
33+50	868.24	13.5	1.8%	868.00	2.8%	867.67	867.53	-4.0%	867.05	-4.0%	12.5	866.55		
34+00	867.95	13.5	1.8%	867.71	3.5%	867.29	867.07	-4.0%	866.59	-4.0%	11.5	866.13		
34+50	867.94	13.5	1.5%	867.74	3.5%	867.32	865.00	-4.0%	864.52	-4.0%	10.5	864.10		
35+00	868.27	13.5	1.0%	868.13	3.5%	867.71	867.26	-4.0%	866.78	-4.0%	9.5	866.40		
35+50	868.37	13.5	1.0%	868.23	3.5%	867.81	867.33	-4.0%	866.85	-4.0%	8.5	866.51		
35+92	868.39	13.5	1.0%	868.25	3.5%	867.83	867.29	-4.5%	866.75	-4.5%	7.7	866.41		BEGIN FULL SUPER
36+00	868.40	13.5	1.0%	868.26	3.5%	867.84	867.30	-4.5%	866.76	-4.5%	7.5	866.42		
36+50	868.49	13.5	1.0%	868.35	3.5%	867.93	867.39	-4.5%	866.85	-4.5%	7.5	866.51		
37+00	868.72	13.5	1.0%	868.58	3.5%	868.16	867.62	-4.5%	867.08	-4.5%	7.5	866.74		
37+50	869.05	13.5	1.0%	868.91	3.5%	868.49	867.95	-4.5%	867.41	-4.5%	7.5	867.07		
38+00	869.53	13.5	1.0%	869.39	3.5%	868.97	868.43	-4.5%	867.89	-4.5%	7.5	867.55		END FULL SUPER
38+50	869.91	13.5	1.0%	869.77	3.5%	869.35	868.87	-4.0%	868.39	-4.5%	7.5	868.05		
39+00	870.44	13.5	1.0%	870.30	3.5%	869.88	869.40	-4.0%	868.92	-4.5%	7.5	868.58		
39+50	870.99	13.5	0.5%	870.92	3.5%	870.50	870.02	-4.0%	869.54	-4.5%	7.5	869.20		
40+00	871.65	13.5	0.0%	871.65	3.5%	871.23	870.75	-4.0%	870.27	-4.5%	7.5	869.93		
40+50	872.40	13.5	-0.3%	872.43	3.5%	872.01	871.53	-4.0%	871.05	-4.5%	7.5	870.71		
41+00	873.21	13.5	0.3%	873.18	3.5%	872.76	872.28	-4.0%	871.80	-4.5%	7.5	871.46		
41+50	874.00	13.5	0.7%	873.91	3.5%	873.49	873.01	-4.0%	872.53	-4.3%	7.5	872.21		
42+00	874.77	13.5	1.0%	874.63	3.0%	874.27	873.81	-3.8%	873.36	-4.0%	7.5	873.06		
42+50	875.47	13.5	1.3%	875.31	2.8%	874.97	874.59	-3.2%	874.20	-4.0%	7.5	873.90		
43+00	876.19	13.5	1.5%	875.99	2.4%	875.70	875.36	-2.8%	875.03	-4.0%	7.5	874.73		
43+50	876.84	13.5	1.5%	876.64	2.0%	876.40	876.14	-2.2%	875.87	-4.0%	7.5	875.57		
43+91	877.39	13.5	1.5%	877.19	2.0%	876.95	876.69	-2.2%	876.42	-4.0%	7.5	876.12	PROPOSED CL 5 GRADES PROVIDED FOR REFERENCE	PT-RT
44+00	877.47	13.5	1.5%	877.27	2.0%	877.03	876.79	-2.0%	876.55	-4.0%	7.5	876.25		
44+50	878.17	13.5	1.2%	878.01	2.0%	877.77	877.54	-2.0%	877.30	-4.0%	8.2	876.97		END SUPER RT
45+00	878.86	13.5	1.0%	878.72	1.8%	878.51	878.30	-2.0%	878.06	-4.0%	8.8	877.71		
45+30	879.02	13.5	0.5%	878.95	1.2%	878.81	878.71	-2.0%	878.47	-4.0%	9.2	878.10		PT-LT
45+50	879.23	13.5	0.1%	879.22	1.0%	879.10	879.01	-2.0%	878.77	-4.0%	9.5	878.39		
46+00	879.64	13.5	-0.3%	879.67	-0.3%	879.71	879.64	-2.0%	879.40	-4.0%	10.2	878.99		
46+50	880.05	13.5	-1.0%	880.18	-1.0%	880.30	880.25	-2.0%	880.01	-4.0%	10.8	879.57		
47+00	880.49	13.5	-1.5%	880.69	-1.5%	880.87	880.83	-2.0%	880.59	-4.0%	11.5	880.13		
47+50	880.81	13.5	-2.3%	881.12	-1.5%	881.30	881.28	-2.0%	881.04	-4.0%	12.2	880.56		
47+94	880.98	13.5	-3.0%	881.38	-1.8%	881.60		-2.0%	881.36	-3.5%	12.8	880.91		
48+00	880.98	13.5	-3.0%	881.38	-2.0%	881.62		-2.0%	881.38	-3.5%	12.8	880.93		END SUPER LT
48+50	881.44	13.5	-3.0%	881.84	-2.0%	882.08		-2.0%	881.84	-3.5%	13.5	881.37		
49+00	881.74	13.5	-3.0%	882.14	-2.0%	882.38		-2.0%	882.14	-3.5%	13.5	881.67		
49+50	882.10	13.5	-3.0%	882.50	-2.0%	882.74		-2.0%	882.50	-3.5%	13.5	882.03		
50+00	882.35	13.5	-3.0%	882.75	-2.0%	882.99		-2.0%	882.75	-3.5%	13.5	882.28		
50+50	882.66	13.5	-3.0%	883.06	-2.0%	883.30		-2.0%	883.06	-3.5%	13.5	882.59		
51+00	882.83	13.5	-3.0%	883.23	-2.0%	883.47		-2.0%	883.23	-3.5%	13.5	882.76		
51+50	883.03	13.5	-3.0%	883.43	-2.0%	883.67		-2.0%	883.43	-3.5%	13.5	882.96		
52+00	883.01	13.5	-3.0%	883.41	-2.0%	883.65		-2.0%	883.41	-3.5%	13.5	882.94		
52+50	882.84	13.5	-3.0%	883.24	-1.5%	883.42		-1.5%	883.24	-3.5%	13.5	882.77		
53+00	882.63	13.5	-3.0%	883.03	-1.0%	883.15		-1.0%	883.03	-2.5%	13.5	882.69		
53+50	882.17	13.5	-3.0%	882.57	-2.0%	882.81		-1.5%	882.63	-3.5%	13.5	882.16		
54+00	881.76	13.5	-3.0%	882.16	-2.0%	882.40		-2.0%	882.16	-3.0%	13.5	881.76		
54+50	881.21	13.5	-3.0%	881.61	-2.0%	881.85		-2.0%	881.61	-3.0%	13.5	881.21		
55+00	880.55	13.5	-3.0%	880.95	-2.0%	881.19		-2.0%	880.95	-3.0%	13.5	880.55		
55+50	879.68	13.5	-3.0%	880.08	-2.0%	880.32		-1.5%	880.14	-2.5%	13.5	879.80		BEGIN SUPER RT
56+00	878.92	13.5	-3.0%	879.32	-2.0%	879.56		-1.0%	879.44	-1.5%	13.5	879.24		
56+50	878.01	13.5	-3.0%	878.41	-2.0%	878.65		0.3%	878.68	-0.5%	13.5	878.61		
57+00	876.97	13.5	-3.4%	877.43	-2.4%	877.72		1.0%	877.84	1.0%	13.5	877.98		BEGIN SUPER LT
57+50	875.68	13.5	-4.1%	876.24	-3.1%	876.61		1.8%	876.82	2.0%	13.5	877.09		
58+00	874.27	13.5	-4.5%	874.88	-3.5%	875.30		2.5%	875.60	2.5%	13.5	875.94		
58+50	872.89	13.5	-4.5%	873.50	-4.0%	873.98		3.3%	874.37	3.3%	13.5	874.81		
59+00	871.42	13.5	-4.5%	872.03	-4.5%	872.57		3.8%	873.03	3.5%	13.5	873.50		BEGIN FULL SUPER
59+50	869.99	13.5	-4.5%	870.60	-4.5%	871.14		4.0%	871.62	3.5%	13.5	872.09		
60+00	868.77	13.5	-4.5%	869.38	-4.5%	869.92		4.0%	870.40	3.5%	13.5	870.87		
60+50	867.54	13.5	-4.0%	868.08	-4.5%	868.62		4.0%	869.10	3.3%	13.5	869.54		
60+95	866.78	13.5	-4.0%	867.32	-4.5%	867.86		4.0%	868.34	3.0%	13.5	868.75		MATCH EXISTING

NO	DATE	BY	CKD	APPR	REVISION		
						03/30/2016	11:01:50 AM

NAME: P:\16-01-00\CSAH_116(RamseyBlvd-BasaltSt)\Base\PROPOSED\PROPOSED.dgn

I HEREBY CERTIFY THAT THIS PLAN WAS PREPARED BY ME OR UNDER MY DIRECT SUPERVISION AND THAT I AM A DULY LICENSED PROFESSIONAL ENGINEER UNDER THE LAWS OF THE STATE OF MINNESOTA.

PRINT NAME: MATTHEW J. JOHN

SIGNATURE: Matthew J. John

DATE: 4/6/2016 LICENSE NO. 51639

DRAWN BY SPH DATE 03/30/2016

DESIGN BY SAT DATE 03/30/2016

CHECKED BY MJJ DATE 03/30/2016

ANOKA COUNTY

ANOKA COUNTY HIGHWAY DEPT.

COUNTY PROJECT 16-15-116

SUPERELEVATION / GRADE CORRECTION

Sheet 3 of 23 Sheets

CSAH 116- Bunker Lake Boulevard
RECLAIM SECTION
10+38 - 17+19

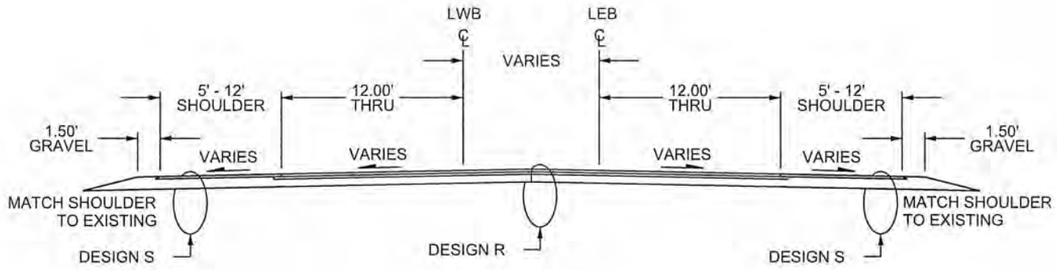

EXISTING SECTION
ENTIRE PROJECT

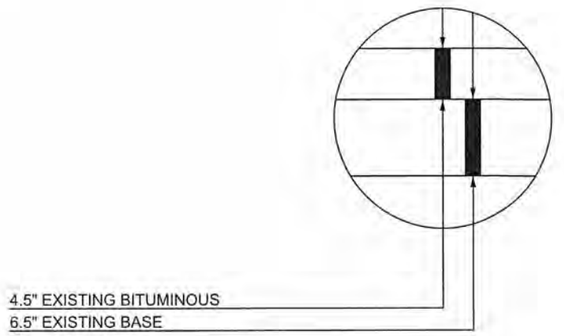

CSAH 116- Bunker Lake Boulevard

TURN SECTION
27+50 - 33+04

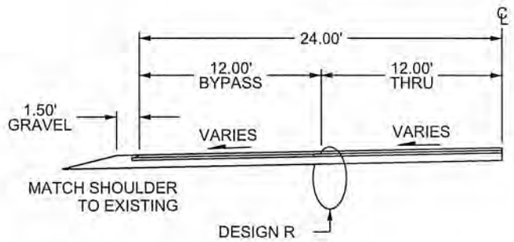

RECLAIM SECTION
17+19 - 32+90

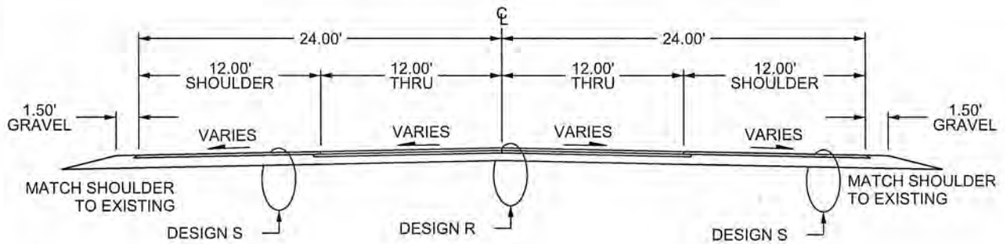

BYPASS SECTION
24+38 - 30+64

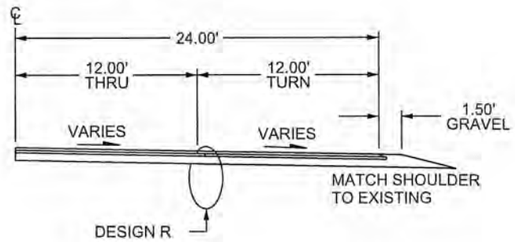

CSAH 116- Bunker Lake Boulevard
RECLAIM SECTION
32+90 - 35+92

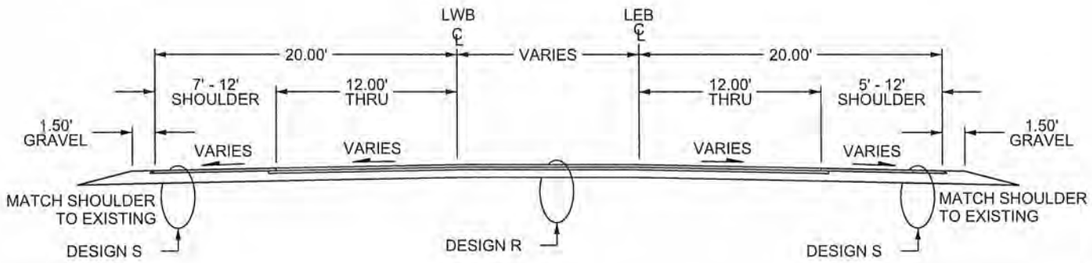

DESIGN S
RECLAIM SECTION

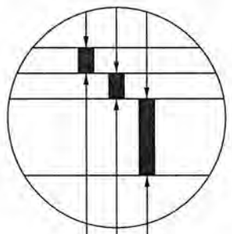

DESIGN R
RECLAIM SECTION

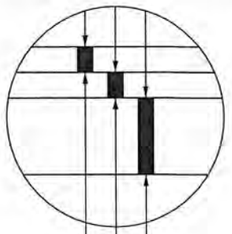

NO	DATE	BY	CKD	APPR	REVISION		
						03/30/2016	11:01:53 AM

NAME: P:\16-01-00\CSAH_116(RamseyBlvd-BasaltSt)\Base\PROPOSED\PROPOSED.dgn

I HEREBY CERTIFY THAT THIS PLAN WAS PREPARED BY ME OR UNDER MY DIRECT SUPERVISION AND THAT I AM A DULY LICENSED PROFESSIONAL ENGINEER UNDER THE LAWS OF THE STATE OF MINNESOTA.
PRINT NAME: MATTHEW J. JOHN
SIGNATURE:
DATE: 4/6/2016 LICENSE NO. 51639

DRAWN BY JJ DATE 03/30/2016
DESIGN BY SAT DATE 03/30/2016
CHECKED BY MJJ DATE 03/30/2016

ANOKA COUNTY
HIGHWAY DEPT.

COUNTY PROJECT 16-15-116

TYPICAL SECTIONS

Sheet 4 of 23 Sheets

CSAH 116- Bunker Lake Boulevard

BYPASS SECTION
38+78 - 45+73

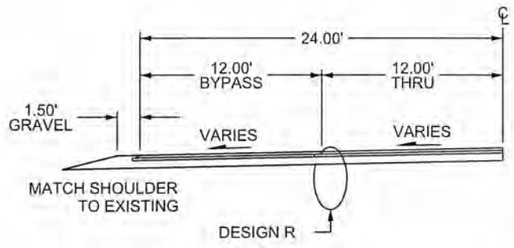

RECLAIM SECTION
35+92 - 43+89

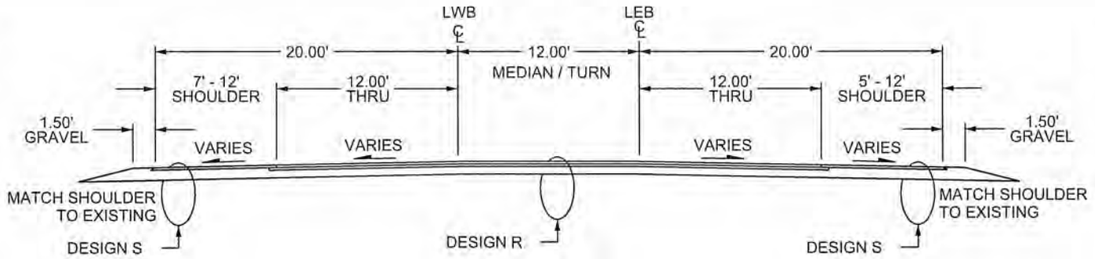

TURN SECTION
35+88 - 42+37

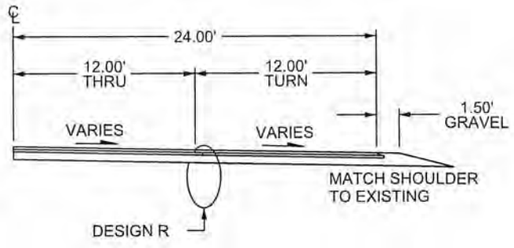

CSAH 116- Bunker Lake Boulevard

RECLAIM SECTION
43+89 - 47+93

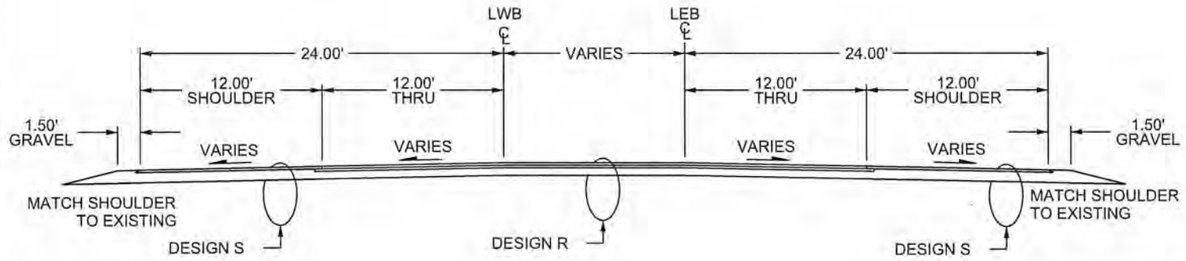

DESIGN S
RECLAIM SECTION

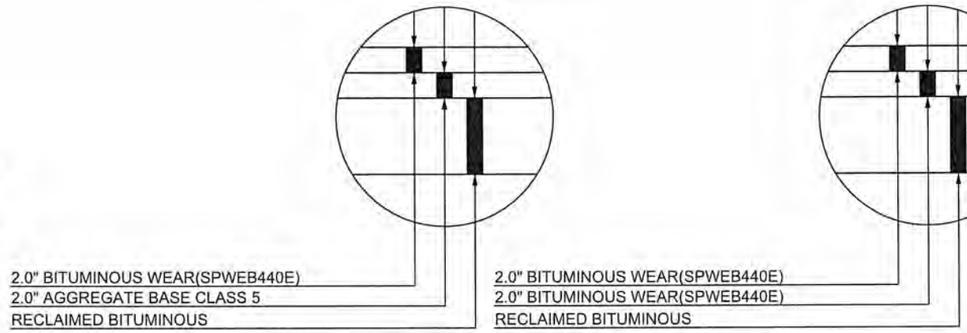

DESIGN R
RECLAIM SECTION

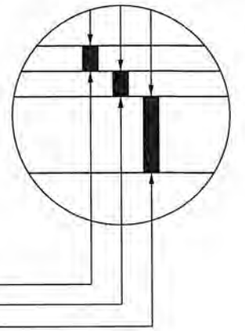

CSAH 116- Bunker Lake Boulevard

TURN SECTION
52+28 - 57+12

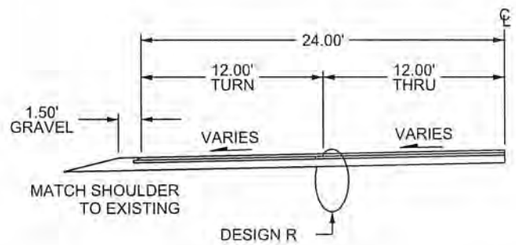

RECLAIM SECTION
47+93 - 60+72

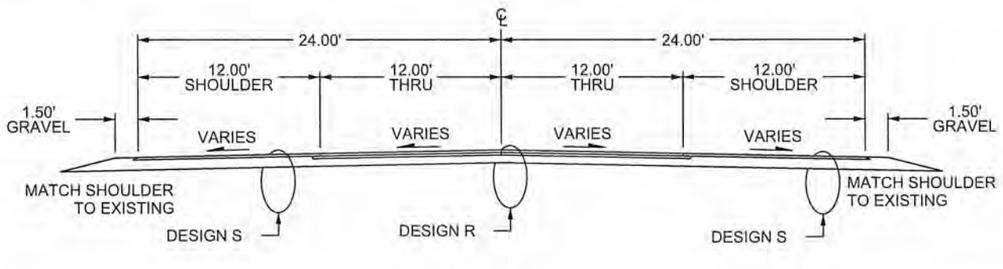

TURN SECTION
49+00 - 53+94

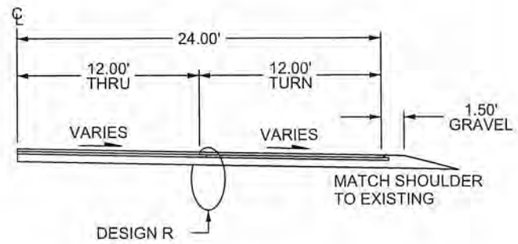

NO	DATE	BY	CKD	APPR	REVISION		
						03/30/2016	11:01:56 AM

NAME: P:\16-01-00\CSAH_116(RamseyBlvd-BasaltSt)\Base\PROPOSED\PROPOSED.dgn

I HEREBY CERTIFY THAT THIS PLAN WAS PREPARED BY ME OR UNDER MY DIRECT SUPERVISION AND THAT I AM A DULY LICENSED PROFESSIONAL ENGINEER UNDER THE LAWS OF THE STATE OF MINNESOTA.

PRINT NAME: MATTHEW J. JOHN

SIGNATURE: Matthew J. John

DATE: 4/6/2016 LICENSE NO. 51639

DRAWN BY JJ DATE 03/30/2016

DESIGN BY SAT DATE 03/30/2016

CHECKED BY MJJ DATE 03/30/2016

ANOKA COUNTY HIGHWAY DEPT.

COUNTY PROJECT 16-15-116

TYPICAL SECTIONS

Sheet 5 of 23 Sheets

STREET APPROACH DETAIL

BITUMINOUS STREET

PLAN VIEW

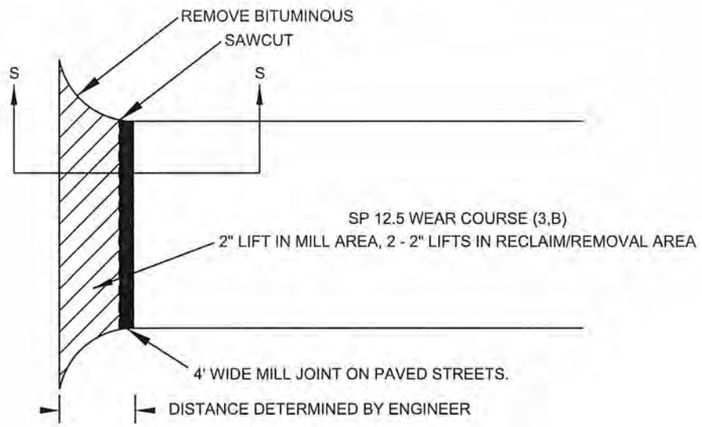

SECTION S - S

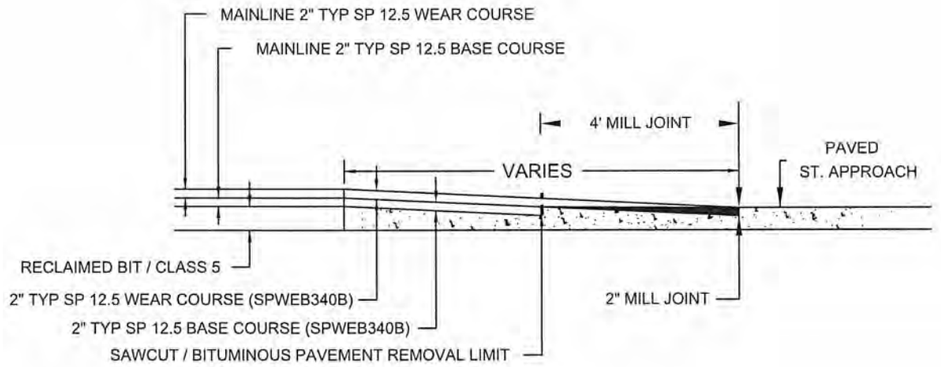

RECLAIM AREA - DRIVEWAY DETAIL

BITUMINOUS

PLAN VIEW

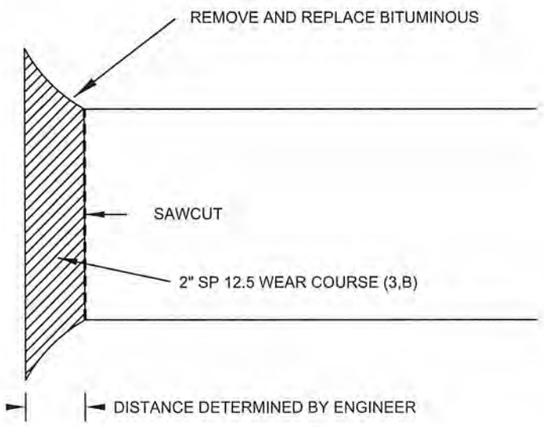

NO	DATE	BY	CKD	APPR	REVISION		
						03/30/2016	11:02:04 AM

NAME: P:\16-01-00\CSAH_116\RamseyBlvd-BasaltSt\Base\PROPOSED\PROPOSED.dgn

I HEREBY CERTIFY THAT THIS PLAN WAS PREPARED BY ME OR UNDER MY DIRECT SUPERVISION AND THAT I AM A DULY LICENSED PROFESSIONAL ENGINEER UNDER THE LAWS OF THE STATE OF MINNESOTA.

PRINT NAME: MATTHEW J. JOHN

SIGNATURE: Matthew J. John

DATE: 4/6/2016 LICENSE NO. 51639

DRAWN BY SPH DATE 03/30/2016

DESIGN BY SAT DATE 03/30/2016

CHECKED BY MJJ DATE 03/30/2016

ANOKA COUNTY HIGHWAY DEPT.

COUNTY PROJECT 16-15-116

DETAILS

Sheet 6 of 23 Sheets

mjohn

MAINLINE JOINT DETAIL

PLAN VIEW

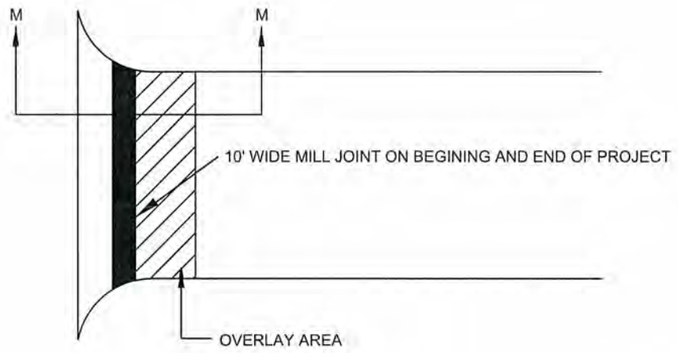

SECTION M - M

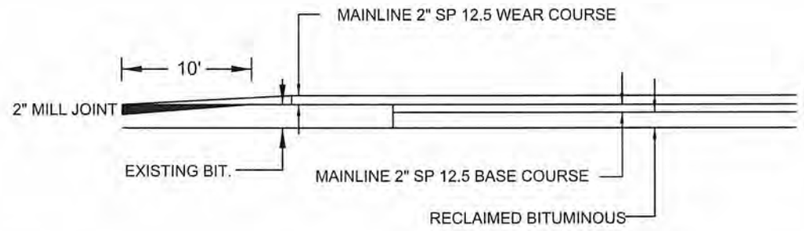

SHOULDER DETAIL

BITUMINOUS SAFETY EDGE
GRAVEL SHOULDER

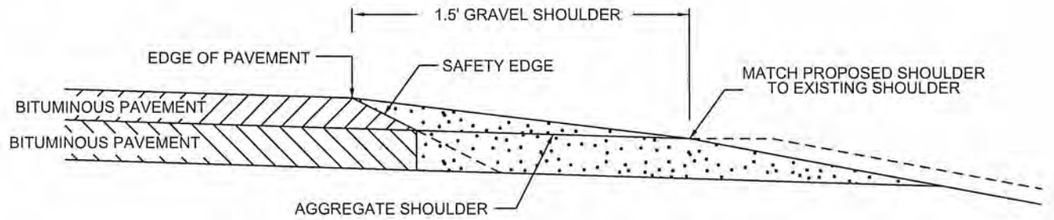

SAFETY EDGE TO BE USED IN ALL NON-CURB AREAS ON SHOULDER.

OPTIONAL DESIGN EXTENDS SAFETY EDGE DEEPER
THAN 6" AND WIDER THAN 10.5". SEE SPECIAL PROVISIONS .

NO	DATE	BY	CKD	APPR	REVISION	
						03/30/2016 11:02:09 AM

NAME P:\16-01-00\CSAH_116(RamseyBlvd-BasaltSt)\Base\PROPOSED\PROPOSED.dgn

I HEREBY CERTIFY THAT THIS PLAN WAS PREPARED BY ME OR UNDER MY DIRECT SUPERVISION AND THAT I AM A DULY LICENSED PROFESSIONAL ENGINEER UNDER THE LAWS OF THE STATE OF MINNESOTA.

PRINT NAME: MATTHEW J. JOHN
SIGNATURE: Matthew J. John
DATE: 4/6/2016 LICENSE NO. 51639

DRAWN BY SPH DATE 03/30/2016
DESIGN BY SAT DATE 03/30/2016
CHECKED BY MJJ DATE 03/30/2016

ANOKA COUNTY

ANOKA COUNTY HIGHWAY DEPT.

COUNTY PROJECT 16-15-116

DETAILS

Sheet 7 of 23 Sheets

mjohn

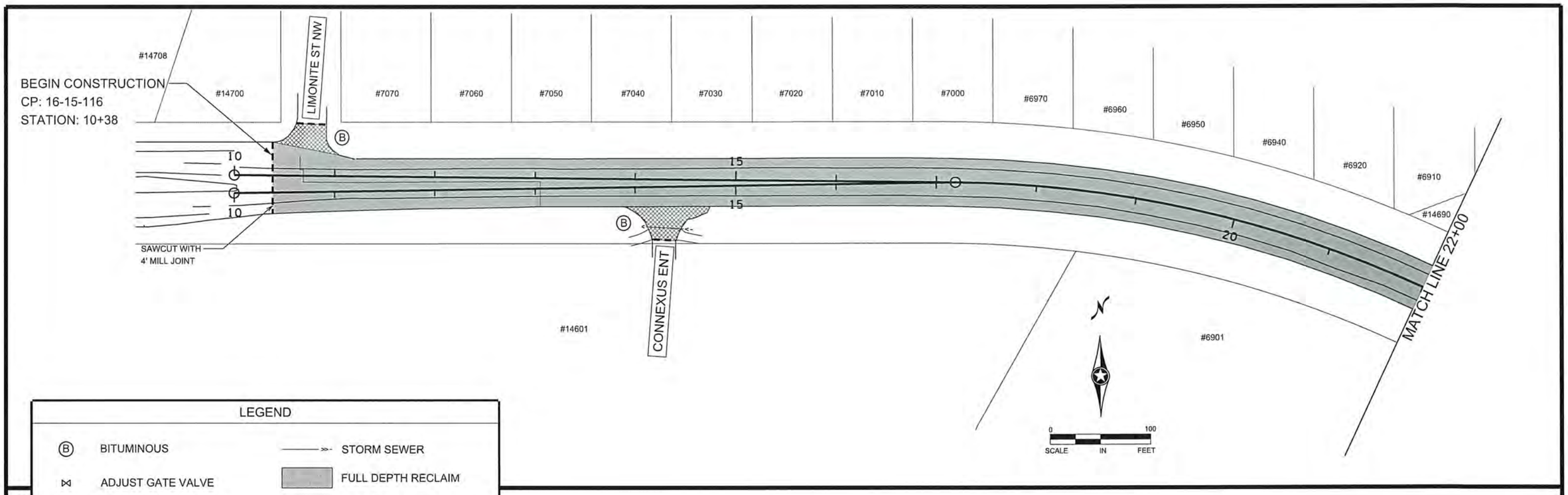

LEGEND

- Ⓑ BITUMINOUS
- ⋈ ADJUST GATE VALVE
- SAWCUT
- SUPER TRANSITION AREA
- STORM SEWER
- FULL DEPTH RECLAIM
- REMOVE BIT. PAVEMENT
- R / W

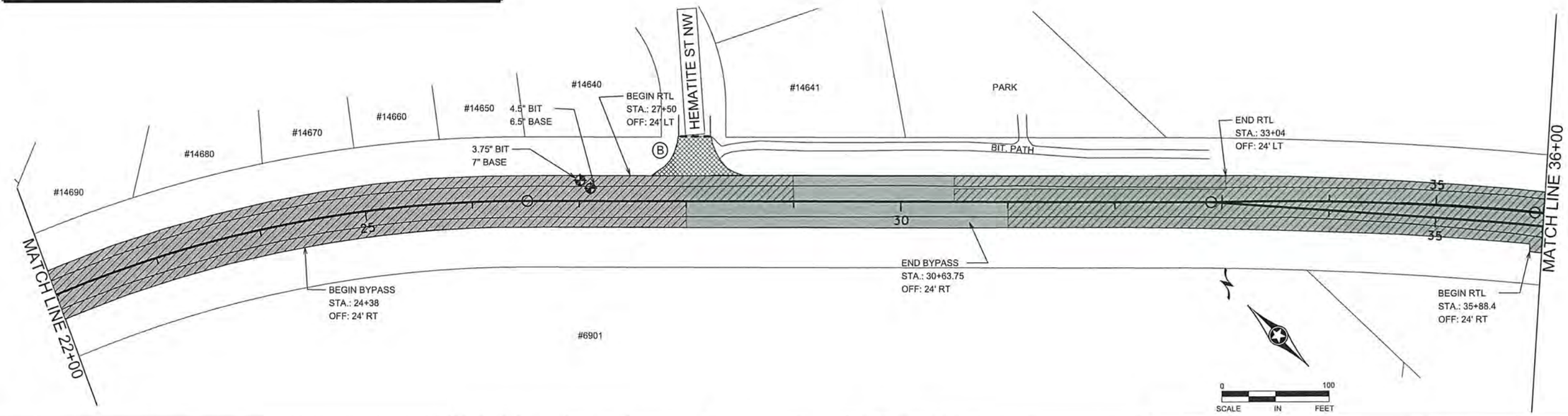

NO	DATE	BY	CKD	APPR	REVISION		
						03/30/2016	11:02:12 AM

NAME: P:\16-01-00\CSAH_116(RamseyBlvd-BasaltSt)\Base\PROPOSED\PROPOSED.dgn

I HEREBY CERTIFY THAT THIS PLAN WAS PREPARED BY ME OR UNDER MY DIRECT SUPERVISION AND THAT I AM A DULY LICENSED PROFESSIONAL ENGINEER UNDER THE LAWS OF THE STATE OF MINNESOTA.

PRINT NAME: MATTHEW J. JOHN

SIGNATURE: Matthew J. John

DATE: 4/6/2016 LICENSE NO. 51639

DRAWN BY SPH DATE 03/30/2016

DESIGN BY SAT DATE 03/30/2016

CHECKED BY MJJ DATE 03/30/2016

ANOKA COUNTY

ANOKA COUNTY HIGHWAY DEPT.

COUNTY PROJECT 16-15-116

CONSTRUCTION PLAN

STA 10+38 TO 36+00

Sheet 8 of 23 Sheets

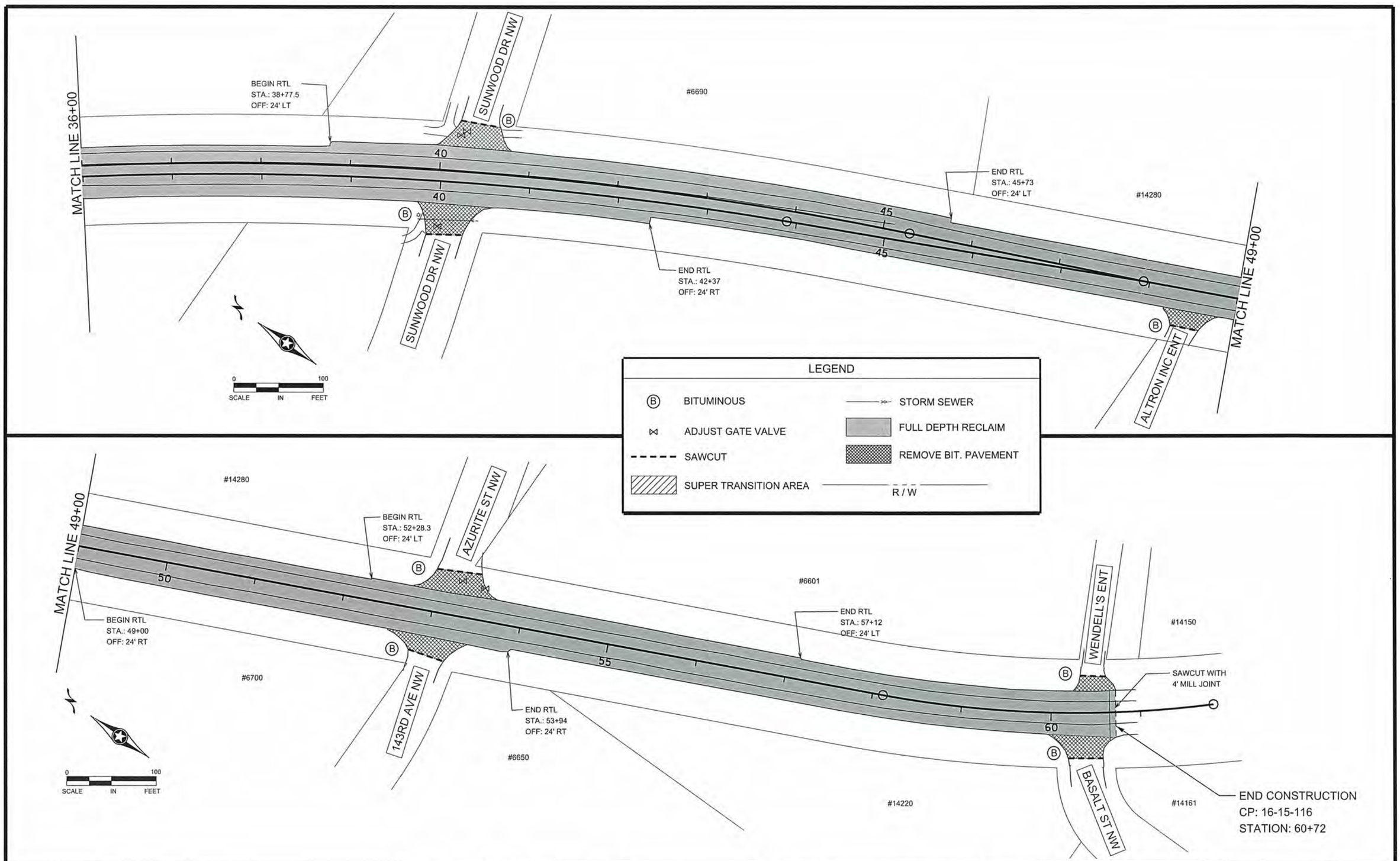

NO	DATE	BY	CKD	APPR	REVISION		
						03/30/2016	11:02:19 AM

NAME: P:\16-01-00\CSAH_116(RamseyBlvd-BasaltSt)\Base\PROPOSED\PROPOSED.dgn

I HEREBY CERTIFY THAT THIS PLAN WAS PREPARED BY ME OR UNDER MY DIRECT SUPERVISION AND THAT I AM A DULY LICENSED PROFESSIONAL ENGINEER UNDER THE LAWS OF THE STATE OF MINNESOTA.

PRINT NAME: MATTHEW J. JOHN

SIGNATURE: Matthew J. John

DATE: 4/6/2016 LICENSE NO. 51639

DRAWN BY SPH DATE 03/30/2016

DESIGN BY SAT DATE 03/30/2016

CHECKED BY MJJ DATE 03/30/2016

ANOKA COUNTY

ANOKA COUNTY HIGHWAY DEPT.

COUNTY PROJECT 16-15-116

CONSTRUCTION PLAN

STA 36+00 TO 60+72

Sheet 9 of 23 Sheets

PERMANENT PAVEMENT MARKING PLAN
NOTES AND GUIDELINES

GENERAL INFORMATION:
THE ENGINEER'S INVOLVEMENT IN THE APPLICATION OF THE MATERIAL SHALL BE LIMITED TO FIELD CONSULTATION AND INSPECTION. ANOKA COUNTY HIGHWAY DEPARTMENT WILL PLACE NECESSARY "SPOTTING" AT APPROPRIATE POINTS TO PROVIDE HORIZONTAL CONTROL FOR STRIPING AND TO DETERMINE NECESSARY STARTING AND CUTOFF POINTS, LONGITUDINAL JOINTS, PAVEMENT EDGES AND EXISTING MARKINGS MAY SERVE AS HORIZONTAL CONTROL WHEN SO DIRECTED.

EDGE LINES AND LANE LINES ARE TO BE BROKEN ONLY AT INTERSECTIONS WITH PUBLIC ROADS AND AT PRIVATE ENTRANCES IF THEY ARE CONTROLLED BY A YIELD SIGN, STOP SIGN OR TRAFFIC SIGNAL. THE BREAK POINT IS TO BE AT THE START OF THE RADIUS FOR THE INTERSECTION OR AT MARKED STOP LINES OR CROSSWALKS.

A TOLERANCE OF $\frac{1}{4}$ INCH UNDER OR $\frac{1}{4}$ INCH OVER THE SPECIFIED WIDTH WILL BE ALLOWED FOR STRIPING PROVIDED THE VARIATION IS GRADUAL AND DOES NOT DETRACT FROM THE GENERAL APPEARANCE. BROKEN LINE SEGMENTS MAY VARY UP TO ONE-HALF FOOT FROM THE SPECIFIED LENGTHS PROVIDED THE OVER AND UNDER VARIATIONS ARE REASONABLY COMPENSATORY. ALIGNMENT DEVIATIONS FROM THE CONTROL GUIDE SHALL NOT EXCEED 1 INCH. MATERIAL SHALL NOT BE APPLIED OVER LONGITUDINAL JOINTS, ESTABLISHMENT OF APPLICATION TOLERANCES SHALL NOT RELIEVE THE CONTRACTOR OF THEIR RESPONSIBILITY TO COMPLY AS CLOSELY AS PRACTICABLE WITH THE PLANNED DIMENSIONS.

EPOXY:
THE ROAD SURFACE SHALL BE CLEANED AT THE DIRECTION OF THE ENGINEER JUST PRIOR TO APPLICATION. PAVEMENT CLEANING SHALL CONSIST OF AT LEAST BRUSHING WITH A ROTARY BROOM (NON-METALLIC) OR AS RECOMMENDED BY THE MATERIAL MANUFACTURER AND ACCEPTABLE TO THE ENGINEER. NEW PORTLAND CEMENT CONCRETE SURFACES SHALL BE SANDBLAST CLEANED TO REMOVE ANY SURFACE TREATMENT AND/OR LAITANCE ON LOW SPEED (SPEED LIMIT 35 MPH OR LESS) URBAN PORTLAND CEMENT CONCRETE ROADWAYS. SANDBLAST CLEANING SHALL BE USED FOR ALL EPOXY PAVEMENT MARKINGS.

THE EPOXY MARKING APPLICATION SHALL IMMEDIATELY FOLLOW THE PAVEMENT CLEANING. GLASS BEADS SHALL BE APPLIED IMMEDIATELY AFTER APPLICATION OF THE EPOXY RESIN LINE TO PROVIDE AN IMMEDIATE NO-TRACK SYSTEM.

AN EPOXY RESIN LINE 4" WIDE AND 15 MILL THICKNESS (WET), REQUIRES AN APPLICATION RATE OF ONE (1) GALLON OF COMPONENTS FOR 320 FEET OF LINE. GLASS BEADS SHALL BE APPLIED AT A POUND PER GALLON RATE SUFFICIENT TO ACHIEVE AN ACCEPTABLE NO-TRACK SYSTEM.

OPERATIONS SHALL BE CONDUCTED ONLY WHEN THE ROAD PAVEMENT SURFACE TEMPERATURES ARE 50 DEGREES FAHRENHEIT OR GREATER.

PERMANENT PAVEMENT MARKINGS SHALL NOT BE PLACED OVER TEMPORARY TAPE MARKINGS.

PREFORMED THERMOPLASTIC:
THE PREFORMED THERMOPLASTIC MARKINGS SHALL BE APPLIED IN ACCORDANCE WITH THE MANUFACTURER'S RECOMMENDATIONS ON CLEAN AND DRY SURFACES. SEE SPECIAL PROVISIONS FOR PREFORMED THERMOPLASTIC MARKING SPECIFICATIONS.

PAINT:
AT THE TIME OF APPLYING THE MARKING MATERIAL, THE APPLICATION AREA SHALL BE FREE OF CONTAMINATION. THE CONTRACTOR SHALL CLEAN THE ROADWAY SURFACE PRIOR TO THE LINE APPLICAITON IN A MANNER AND TO THE EXTENT REQUIRED BY THE ENGINEER.

GLASS BEADS SHALL BE APPLIED IMMEDIATELY AFTER APPLICATION OF THE PAINT LINE.

EXCEPT WHEN USED AS A TEMPORARY MARKING, PAVEMENT MARKINGS SHALL ONLY BE APPLIED IN SEASONABLE WEATHER WHEN AIR TEMPERATURE IS 50 DEGREES FARHENHEIT OR HIGHER AND SHALL NOT BE APPLIED WHEN THE WIND OR OTHER CONDITIONS CAUSE A FILM OR DUST TO BE DEPOSITED ON THE PAVEMENT SURFACE AFTER CLEANING AND BEFORE THE MARKING MATERIAL CAN BE APPLIED.

THE FILLING OF TANKS, POURING OF MATERIALS OR CLEANING OF EQUIPMENT SHALL NOT BE PERFORMED ON UNPROTECTED PAVEMENT SURFACES UNLESS ADEQUATE PROVISIONS ARE MADE TO PREVENT SPILLAGE OF MATERIAL.

ITEM	UNIT	TOTAL QUANTITY
4" SOLID LINE WHITE - EPOXY PAINT	LIN FT	14480
4" BROKEN LINE WHITE - EPOXY PAINT	LIN FT	220
4" SOLID LINE YELLOW - EPOXY PAINT	LIN FT	1035
4" DOUBLE SOLID LINE YELLOW - EPOXY PAINT	LIN FT	6465
24" SOLID LINE YELLOW - PREFORMED THERMOPLASTIC	SQ FT	968

SYMBOLS & MATERIALS LEGEND

CROSSWALK BLOCK WHITE PREFORMED THERMOPLASTIC

PAVEMENT MESSAGE (LEFT ARROW) PREFORMED THERMOPLASTIC

STRIPING KEY

CIRCLE - EPOXY

SQUARE PREFORMED THERMOPLASTIC

TRIANGLE - PAINT

PENTAGON - REMOVABLE PREFORMED PLASTIC MARKING

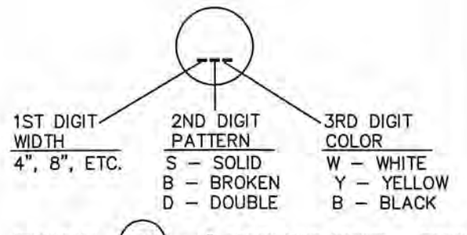

EXAMPLE: (4SW) = 4" SOLID LINE WHITE – EPOXY

NO	DATE	BY	CKD	APPR	REVISION

NAME: P:\16-01-00\CSAH 116\Base\Traffic\Perm pvmt mrkg guide notes_guidelines.dwg

I HEREBY CERTIFY THAT THIS PLAN WAS PREPARED BY ME OR UNDER MY DIRECT SUPERVISION AND THAT I AM A DULY LICENSED PROFESSIONAL ENGINEER UNDER THE LAWS OF THE STATE OF MINNESOTA.
PRINT NAME: MATTHEW J. JOHN
SIGNATURE:
DATE: 4/6/2016 LICENSE NO. 51639

DRAWN BY RLB DATE 2/14/14
DESIGN BY RLB DATE 2/14/14
CHECKED BY JR DATE 2/14/14

ANOKA COUNTY HIGHWAY DEPT.

STATE PROJECT NO.
STATE AID PROJECT NO.
STATE AID PROJECT NO.
COUNTY PROJECT NO. 16-15-116

PERMANENT MARKING TABULATION

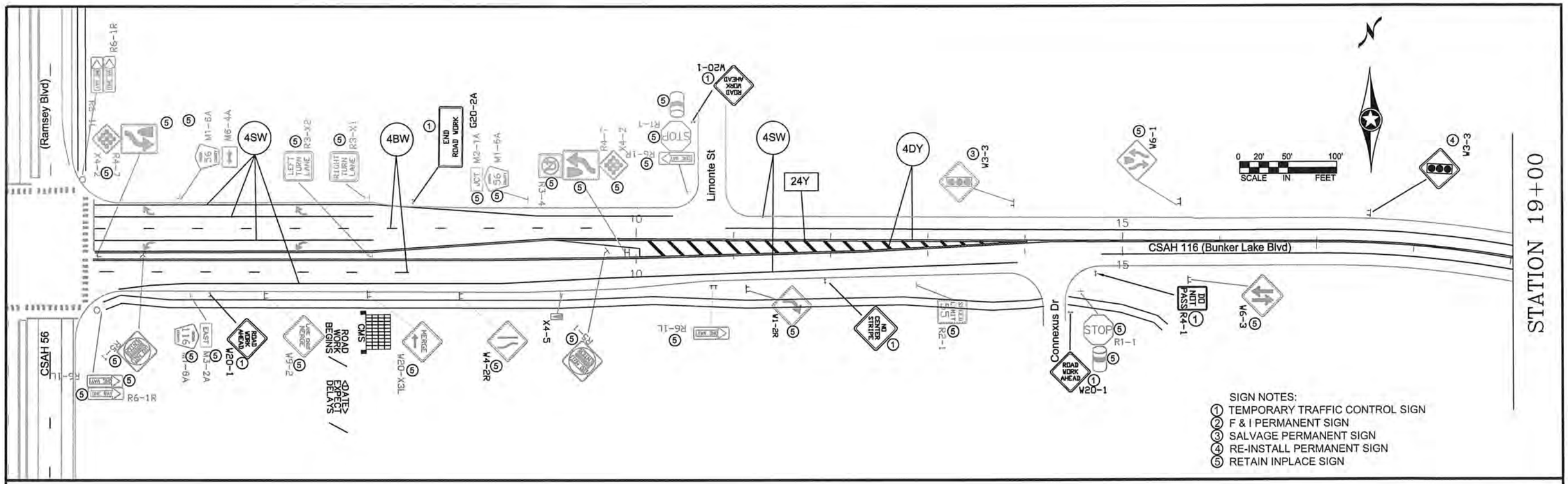

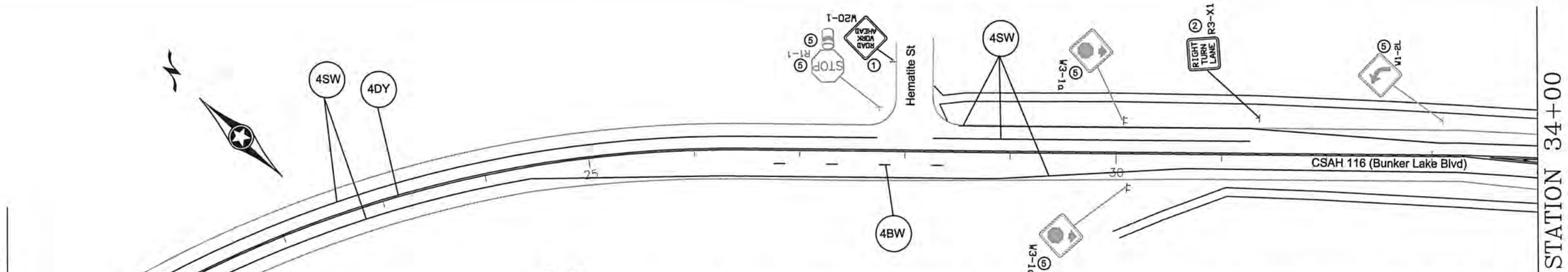

NOTES:

- ALL TRAFFIC CONTROL DEVICES SHALL CONFORM AND BE PLACED IN ACCORDANCE TO THE "MINNESOTA MANUAL ON UNIFORM TRAFFIC CONTROL DEVICES" (MN MUTCD), INCLUDING PART VI, "FIELD MANUAL FOR TEMPORARY TRAFFIC CONTROL ZONE LAYOUTS".
- CONTRACTOR SHALL COMPLY WITH THE LONGITUDINAL DROP-OFF GUIDELINES AS PER THE FIELD MANUAL.
- LOCATIONS OF PAVEMENT MARKINGS ARE APPROXIMATE. EXACT LOCATIONS WILL BE DETERMINED IN THE FIELD BY THE ENGINEER.
- CONTRACTOR SHALL SUPPLY AND INSTALL THE PORTABLE CHANGEABLE MESSAGE SIGN (CMS) A MINIMUM OF SEVEN DAYS PRIOR TO ACTUAL COMMENCEMENT OF ROAD WORK, TO A LOCATION AS SPECIFIED BY THE ENGINEER. SIGNS TO BE REMOVED WHEN ROAD WORK BEGINS. PAYMENT SHALL BE MADE AS PER ITEM 2563.613 PORTABLE CHANGEABLE MESSAGE SIGN BY THE UNIT/DAY.
- CONTRACTOR SHALL SUPPLY AND ERECT THE TEMPORARY TRAFFIC CONTROL SIGNS AS SHOWN ON THIS DRAWING AND DETAILED IN THE SPECIAL PROVISIONS FROM THE TIME WORK COMMENCES ON THIS ROADWAY UNTIL THIS ROADWAY IS PERMANENTLY STRIPED. ALL NECESSARY TEMPORARY TRAFFIC CONTROL SIGNS SHALL BE PAID FOR AS PART OF TRAFFIC CONTROL LUMP SUM.
- ALL PERMANENT STRIPING AND PAVEMENT MESSAGES SHALL BE PLACED WITHIN 72 HOURS OF MAINLINE PAVING.
- ANY REQUIRED PERMANENT SIGNING SHALL BE INSTALLED THE SAME DAY AS PERMANENT STRIPING
- ALL EXISTING SIGNING SHALL REMAIN IN PLACE DURING CONSTRUCTION. ALL SALVAGED AND REINSTALLED SIGNS SHALL BE INSTALLED ON TEMPORARY SUPPORTS UNTIL THE PERMANENT INSTALLATION CAN BE MADE. THIS WILL BE CONSIDERED AS INCIDENTAL TO INSTALL SIGN TYPE C.

NO	DATE	BY	CKD	APPR	REVISION

NAME: P:\16-01-00\CSAH 116\Base\Traffic\Signing_Striping.dwg

I HEREBY CERTIFY THAT THIS PLAN WAS PREPARED BY ME OR UNDER MY DIRECT SUPERVISION AND THAT I AM A DULY REGISTERED PROFESSIONAL ENGINEER UNDER THE LAWS OF THE STATE OF MINNESOTA.
PRINT NAME: MATTHEW J. JOHN
SIGNATURE:
DATE: 4/6/2016 REG. NO. 51639

DRAWN BY RLB DATE 1/7/14
DESIGN BY RLB DATE 1/7/14
CHECKED BY JR DATE 1/7/14

ANOKA COUNTY HIGHWAY DEPT.

STATE PROJECT NO.
STATE AID PROJECT NO.
STATE AID PROJECT NO.
COUNTY PROJECT NO. 16-15-116

TEMPORARY SIGNING, PERMANENT SIGNING AND STRIPING

Sheet 11 of 23 Sheets

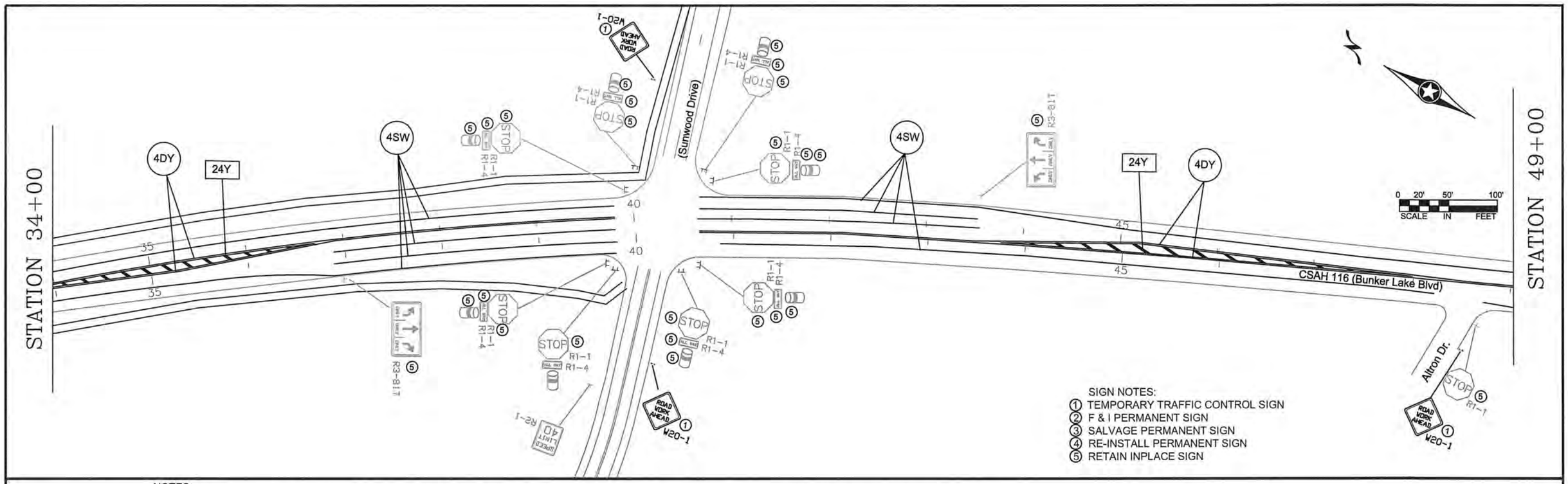

NOTES:

- ALL TRAFFIC CONTROL DEVICES SHALL CONFORM AND BE PLACED IN ACCORDANCE TO THE "MINNESOTA MANUAL ON UNIFORM TRAFFIC CONTROL DEVICES" (MN MUTCD), INCLUDING PART VI, "FIELD MANUAL FOR TEMPORARY TRAFFIC CONTROL ZONE LAYOUTS".
- CONTRACTOR SHALL COMPLY WITH THE LONGITUDINAL DROP-OFF GUIDELINES AS PER THE FIELD MANUAL.
- LOCATIONS OF PAVEMENT MARKINGS ARE APPROXIMATE. EXACT LOCATIONS WILL BE DETERMINED IN THE FIELD BY THE ENGINEER.
- CONTRACTOR SHALL SUPPLY AND INSTALL THE PORTABLE CHANGEABLE MESSAGE SIGN (CMS) A MINIMUM OF SEVEN DAYS PRIOR TO ACTUAL COMMENCEMENT OF ROAD WORK, TO A LOCATION AS SPECIFIED BY THE ENGINEER. SIGNS TO BE REMOVED WHEN ROAD WORK BEGINS. PAYMENT SHALL BE MADE AS PER ITEM 2563.613 PORTABLE CHANGEABLE MESSAGE SIGN BY THE UNIT/DAY.
- CONTRACTOR SHALL SUPPLY AND ERECT THE TEMPORARY TRAFFIC CONTROL SIGNS AS SHOWN ON THIS DRAWING AND DETAILED IN THE SPECIAL PROVISIONS FROM THE TIME WORK COMMENCES ON THIS ROADWAY UNTIL THIS ROADWAY IS PERMANENTLY STRIPED. ALL NECESSARY TEMPORARY TRAFFIC CONTROL SIGNS SHALL BE PAID FOR AS PART OF TRAFFIC CONTROL LUMP SUM.
- ALL PERMANENT STRIPING AND PAVEMENT MESSAGES SHALL BE PLACED WITHIN 72 HOURS OF MAINLINE PAVING.
- ANY REQUIRED PERMANENT SIGNING SHALL BE INSTALLED THE SAME DAY AS PERMANENT STRIPING
- ALL EXISTING SIGNING SHALL REMAIN IN PLACE DURING CONSTRUCTION. ALL SALVAGED AND REINSTALLED SIGNS SHALL BE INSTALLED ON TEMPORARY SUPPORTS UNTIL THE PERMANENT INSTALLATION CAN BE MADE. THIS WILL BE CONSIDERED AS INCIDENTAL TO INSTALL SIGN TYPE C.

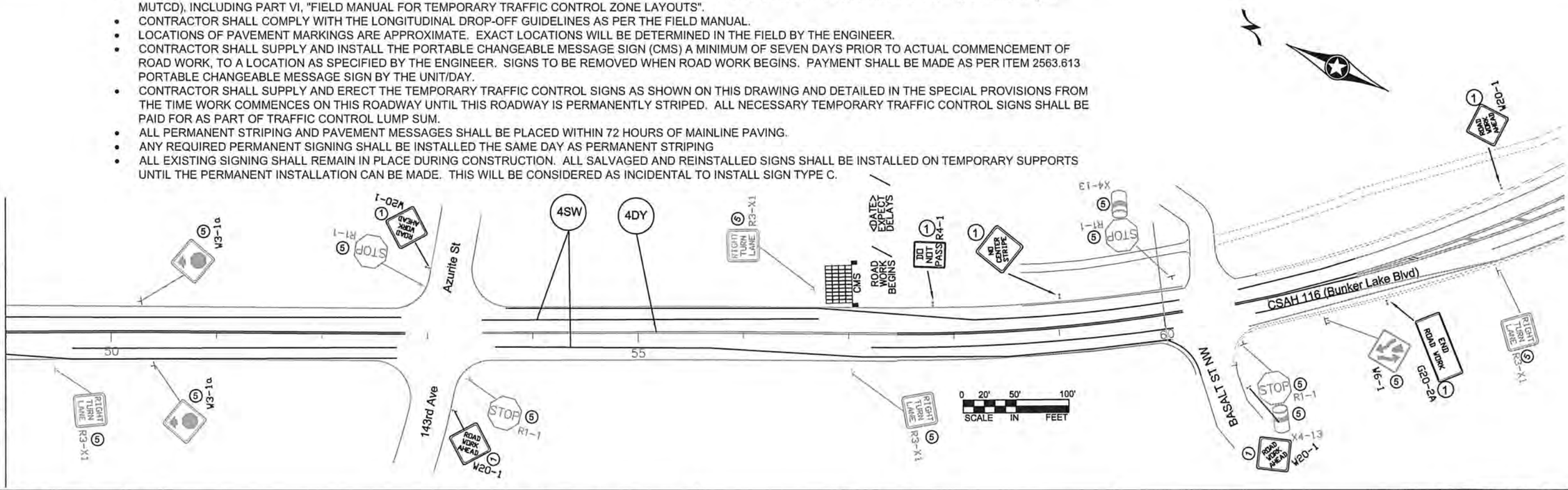

NO	DATE	BY	CKD	APPR	REVISION

NAME: P:\16-01-00\CSAH 116\Base\Traffic\Signing_Striping.dwg

I HEREBY CERTIFY THAT THIS PLAN WAS PREPARED BY ME OR UNDER MY DIRECT SUPERVISION AND THAT I AM A DULY REGISTERED PROFESSIONAL ENGINEER UNDER THE LAWS OF THE STATE OF MINNESOTA.

PRINT NAME: MATTHEW J. JOHN

SIGNATURE: Matthew J. John

DATE: 4/6/2016 REG. NO. 51639

DRAWN BY RLB DATE 1/7/14

DESIGN BY RLB DATE 1/7/14

CHECKED BY JR DATE 1/7/14

ANOKA COUNTY HIGHWAY DEPT.

STATE PROJECT NO. _____

STATE AID PROJECT NO. _____

STATE AID PROJECT NO. _____

COUNTY PROJECT NO. 16-15-116

TEMPORARY SIGNING, PERMANENT SIGNING AND STRIPING

Sheet 12 of 23 Sheets

TEMPORARY TRAFFIC CONTROL SIGNS

M.U.T.C.D. CODE	SIZE	PANEL AREA FT.²	INSERT	QUANTITY	No. POST	MOUNTING HEIGHT (TO PAVEMENT EDGE) FT.
W8-12	48" x 48"	16.00	NO CENTER STRIPE	2	2	7.0'
R4-1	24" x 30"	5.00	DO NOT PASS	2	1	7.0'
R4-2	24" x 30"	5.00	PASS WITH CARE	0	1	7.0'
G20-2A	48" x 24"	8.00	END ROAD WORK	2	2	7.0'
W8-1A	48" x 48"	16.00	BUMP AHEAD	AS NEEDED		
W8-1A	48" x 48"	16.00	BUMP	AS NEEDED		
W8-8	48" x 48"	16.00	ROUGH ROAD	AS NEEDED		
W8-9	48" x 48"	16.00	LOW SHOULDER	AS NEEDED		
	48" x 48"	16.00	NO SHOULDER	AS NEEDED		
W8-11	48" x 48"	16.00	UNEVEN LANES	AS NEEDED		
W20-1	48" x 48"	16.00	ROAD WORK AHEAD	AS NEEDED (ESTIMATED 9)		
CMS sign to be installed a minimum of seven days prior to actual commencement of road work. Signs to be removed when road work begins.				2		

NOTES:

- ALL TRAFFIC CONTROL DEVICES SHALL CONFORM AND BE PLACED IN ACCORDANCE TO THE "MINNESOTA MANUAL ON UNIFORM TRAFFIC CONTROL DEVICES" (MN MUTCD), INCLUDING PART VI, "FIELD MANUAL FOR TEMPORARY TRAFFIC CONTROL ZONE LAYOUTS".
- CONTRACTOR SHALL COMPLY WITH THE LONGITUDINAL DROP-OFF GUIDELINES AS PER THE FIELD MANUAL.
- LOCATIONS OF PAVEMENT MARKINGS ARE APPROXIMATE. EXACT LOCATIONS WILL BE DETERMINED IN THE FIELD BY THE ENGINEER.
- CONTRACTOR SHALL SUPPLY AND INSTALL THE PORTABLE CHANGEABLE MESSAGE SIGN (CMS) A MINIMUM OF SEVEN DAYS PRIOR TO ACTUAL COMMENCEMENT OF ROAD WORK, TO A LOCATION AS SPECIFIED BY THE ENGINEER. SIGNS TO BE REMOVED WHEN ROAD WORK BEGINS. PAYMENT SHALL BE MADE AS PER ITEM 2563.613 PORTABLE CHANGEABLE MESSAGE SIGN BY THE UNIT/DAY.
- CONTRACTOR SHALL SUPPLY AND ERECT THE TEMPORARY TRAFFIC CONTROL SIGNS AS SHOWN ON THIS DRAWING AND DETAILED IN THE SPECIAL PROVISIONS FROM THE TIME WORK COMMENCES ON THIS ROADWAY UNTIL THIS ROADWAY IS PERMANENTLY STRIPED. ALL NECESSARY TEMPORARY TRAFFIC CONTROL SIGNS SHALL BE PAID FOR AS PART OF TRAFFIC CONTROL LUMP SUM.
- ALL PERMANENT STRIPING AND PAVEMENT MESSAGES SHALL BE PLACED WITHIN 72 HOURS OF MAINLINE PAVING.
- ANY REQUIRED PERMANENT SIGNING SHALL BE INSTALLED THE SAME DAY AS PERMANENT STRIPING
- ALL EXISTING SIGNING SHALL REMAIN IN PLACE DURING CONSTRUCTION. ALL SALVAGED AND REINSTALLED SIGNS SHALL BE INSTALLED ON TEMPORARY SUPPORTS UNTIL THE PERMANENT INSTALLATION CAN BE MADE. THIS WILL BE CONSIDERED AS INCIDENTAL TO INSTALL SIGN TYPE C.

CHANGEABLE MESSAGE BOARD - MESSAGE SEQUENCE LAYOUT

		R	O	A	D		
		W	O	R	K		
	B	E	G	I	N	S	

	<	D	A	T	E	>	
	E	X	P	E	C	T	
	D	E	L	A	Y	S	

CMS sign to be installed a minimum of seven days prior to actual commencement of road work. Signs to be removed when road work begins.

SIGN PANELS TYPE C						E
SIZE	INSERT	QUANTITY	SQ FT PANEL AREA	SQ FT TOTAL AREA	MOUNTING POST PER INSTALLATION	MOUNTING HEIGHT
30" x 30"	RIGHT TURN LANE	1	6.25	6.25	1	7.0'

NO	DATE	BY	CKD	APPR	REVISION

NAME: P:\16-01-00\CSAH 116\Base\Traffic\Signing_Striping.dwg

I HEREBY CERTIFY THAT THIS PLAN WAS PREPARED BY ME OR UNDER MY DIRECT SUPERVISION AND THAT I AM A DULY REGISTERED PROFESSIONAL ENGINEER UNDER THE LAWS OF THE STATE OF MINNESOTA.
PRINT NAME: MATTHEW J. JOHN
SIGNATURE: Matthew J. John
DATE: 4/6/2016 REG. NO. 51639

DRAWN BY RLB DATE 1/7/14
DESIGN BY RLB DATE 1/7/14
CHECKED BY JR DATE 1/7/14

ANOKA COUNTY HIGHWAY DEPT.

STATE PROJECT NO.
STATE AID PROJECT NO.
STATE AID PROJECT NO.
COUNTY PROJECT NO. 16-15-116

TRAFFIC CONTROL QUANTITY

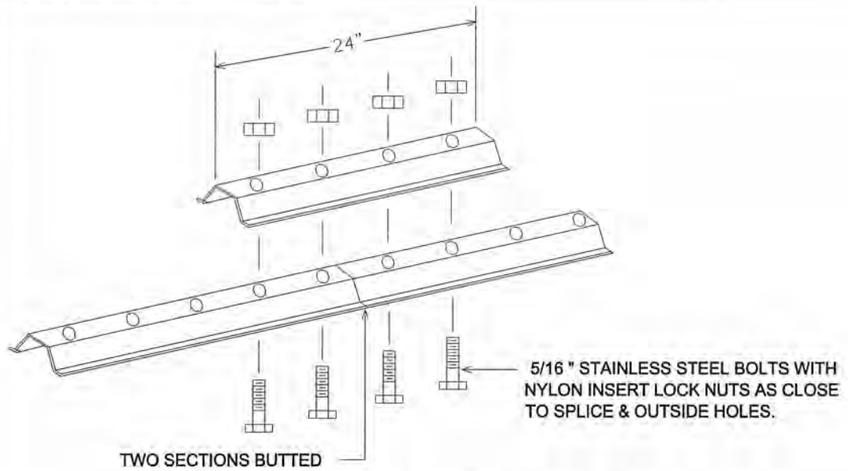

LATERAL BRACE OR STRINGER SPLICE DETAIL (EXPLODED VIEW)

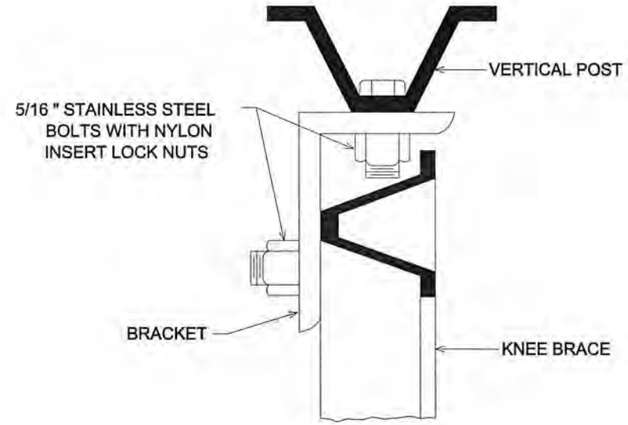

SECTION A-A

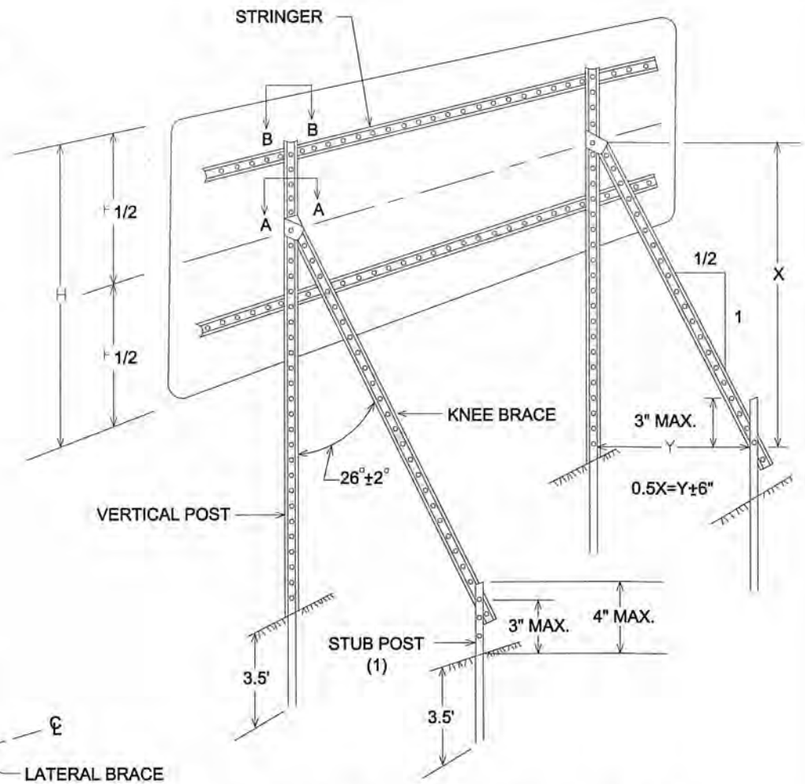

TYPICAL "A-FRAME" INSTALLATION TYPE "D" SIGNS

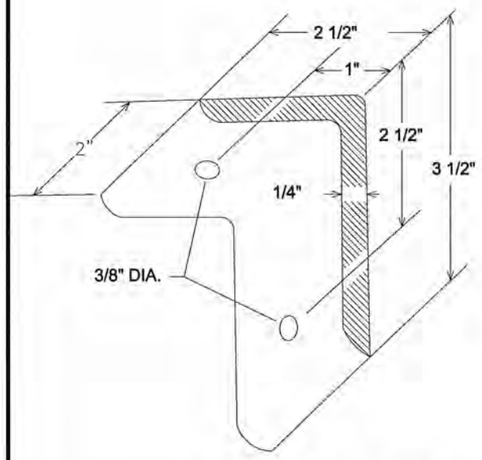

A-FRAME BRACKET

(STEEL MN/DOT 3306 GALVANIZED PER MN/DOT 3394)

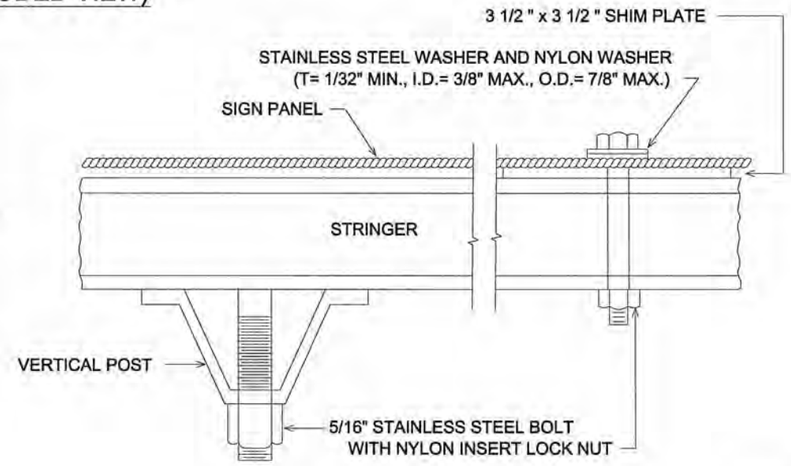

SECTION B-B

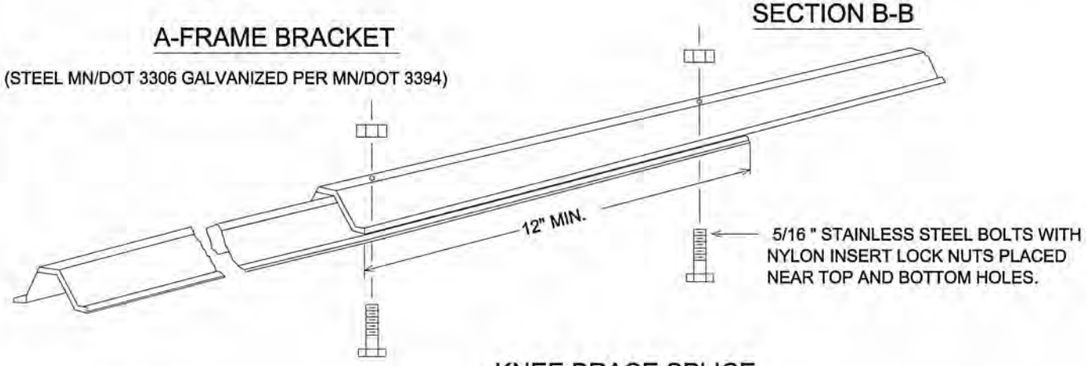

KNEE BRACE SPLICE

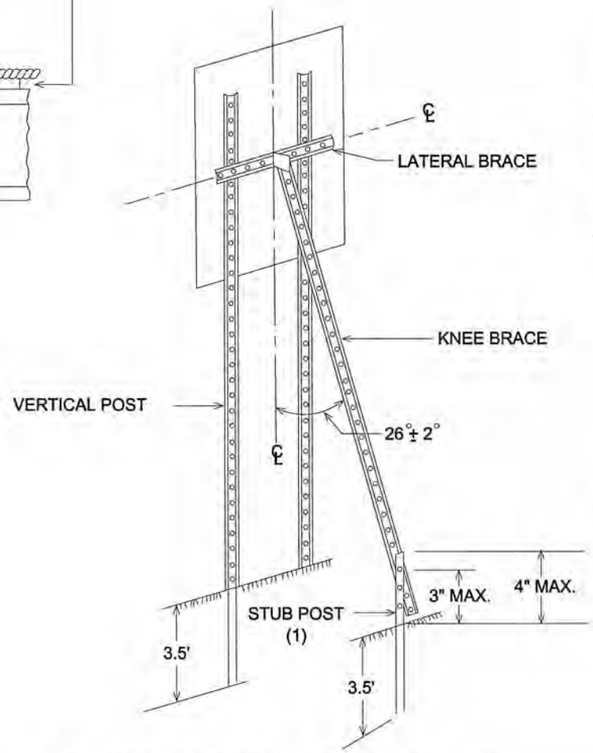

TYPICAL "A-FRAME" INSTALLATION TYPE "C" SIGNS

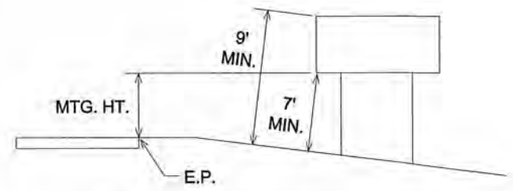

TYPICAL MOUNTING

(1) OFFSET STUB POST 1' TOWARD ROADWAY RELATIVE TO VERTICAL POST.

TYPE C & D SIGN STRUCTURAL DETAILS

NO	DATE	BY	CKD	APPR	REVISION

NAME: P:\16-01-00\CSAH 116\Base\Traffic\Signing_Striping.dwg

I HEREBY CERTIFY THAT THIS PLAN WAS PREPARED BY ME OR UNDER MY DIRECT SUPERVISION AND THAT I AM A DULY REGISTERED PROFESSIONAL ENGINEER UNDER THE LAWS OF THE STATE OF MINNESOTA.
PRINT NAME: MATTHEW J. JOHN
SIGNATURE:
DATE: 4/6/2016 REG. NO. 51639

DRAWN BY RLB DATE 2/6/14
DESIGN BY RLB DATE 2/6/14
CHECKED BY JR DATE 2/6/14

ANOKA COUNTY HIGHWAY DEPT.

STATE PROJECT NO.
STATE AID PROJECT NO.
STATE AID PROJECT NO.
COUNTY PROJECT NO. 16-15-116

SIGNING & STRIPING DETAILS

Sheet 14 of 23 Sheets

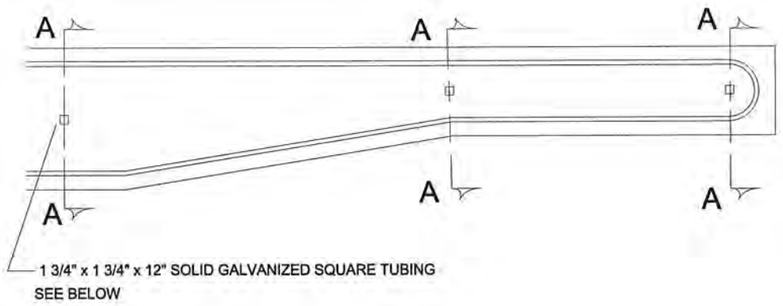

GROUND POST MOUNT SIGN
INSTALLATION TYPICAL

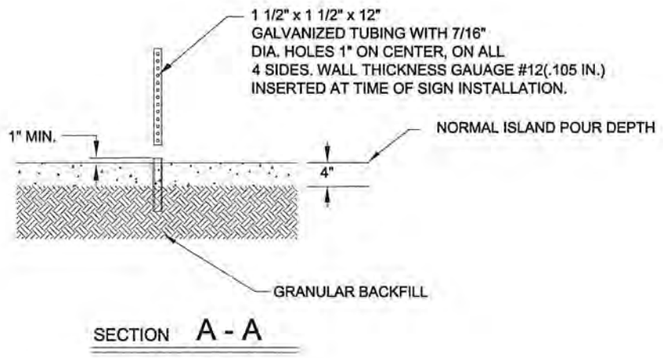

SECTION A - A

ISLAND MOUNT BREAK-AWAY SIGN
INSTALLATION TYPICAL

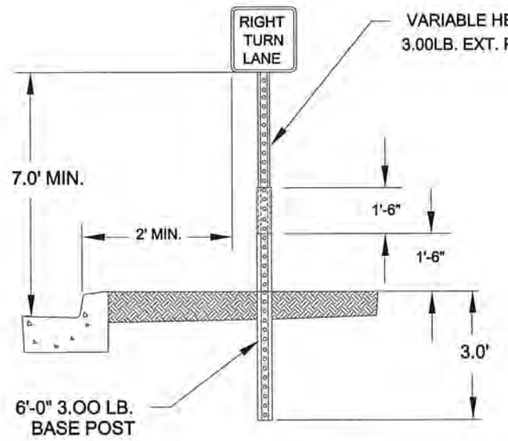

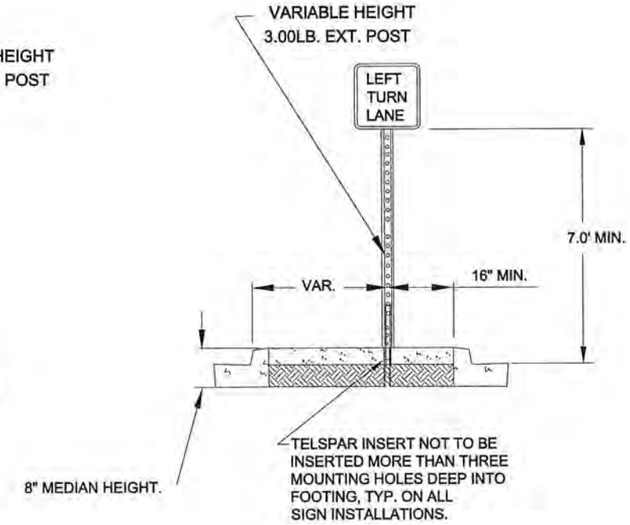

NO	DATE	BY	CKD	APPR	REVISION

NAME: P:\16-01-00\CSAH 116\Base\Traffic\Signing_Striping.dwg

I HEREBY CERTIFY THAT THIS PLAN WAS PREPARED BY ME OR UNDER MY DIRECT SUPERVISION AND THAT I AM A DULY REGISTERED PROFESSIONAL ENGINEER UNDER THE LAWS OF THE STATE OF MINNESOTA.
PRINT NAME: MATTHEW J. JOHN
SIGNATURE:
DATE: 4/6/2016 REG. NO. 51639

DRAWN BY RLB DATE 2/6/14
DESIGN BY RLB DATE 2/6/14
CHECKED BY JR DATE 2/6/14

ANOKA COUNTY
HIGHWAY DEPT.

STATE PROJECT NO.
STATE AID PROJECT NO.
STATE AID PROJECT NO.
COUNTY PROJECT NO. 16-15-116

SIGNING & STRIPING DETAILS

Sheet 15 of 23 Sheets

RURAL

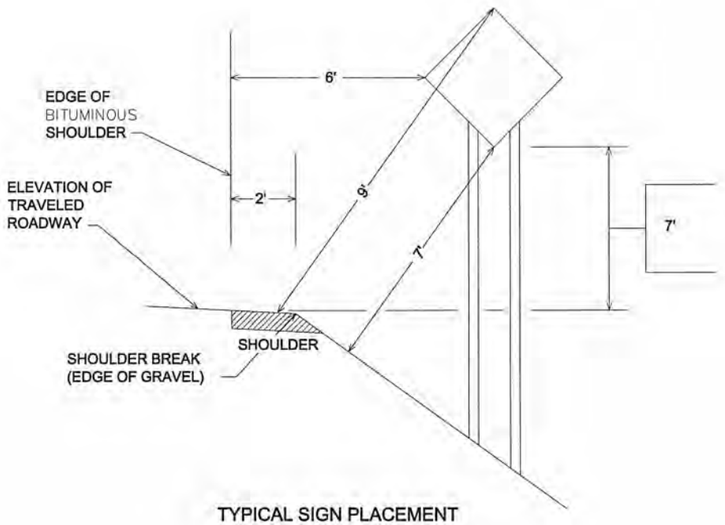

TYPICAL SIGN PLACEMENT

URBAN

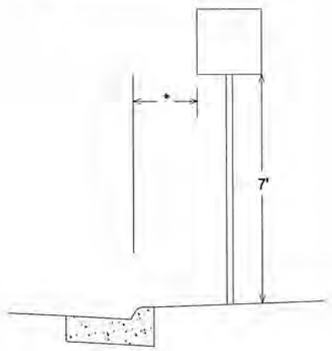

TYPICAL SIGN PLACEMENT

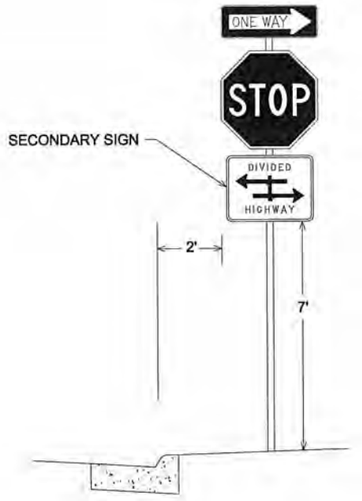

NOTE:

- ALL DIMENSIONS ARE MINIMUMS
- MAINTAIN 2' CLEAR FROM SIGNS TO BITUMINOUS TRAIL

NO	DATE	BY	CKD	APPR	REVISION

NAME: P:\16-01-00\CSAH 116\Base\Traffic\Signing_Striping.dwg

I HEREBY CERTIFY THAT THIS PLAN WAS PREPARED BY ME OR UNDER MY DIRECT SUPERVISION AND THAT I AM A DULY REGISTERED PROFESSIONAL ENGINEER UNDER THE LAWS OF THE STATE OF MINNESOTA.

PRINT NAME: MATTHEW J. JOHN

SIGNATURE:

DATE: 4/6/2016 REG. NO. 51639

DRAWN BY RLB DATE 2/6/14

DESIGN BY RLB DATE 2/6/14

CHECKED BY JR DATE 2/6/14

ANOKA COUNTY

ANOKA COUNTY HIGHWAY DEPT.

STATE PROJECT NO.

STATE AID PROJECT NO.

STATE AID PROJECT NO.

COUNTY PROJECT NO. 16-15-116

SIGNING & STRIPING DETAILS

Sheet 16 of 23 Sheets

TYPICAL MESSAGE PLACEMENT FOR TURN LANES

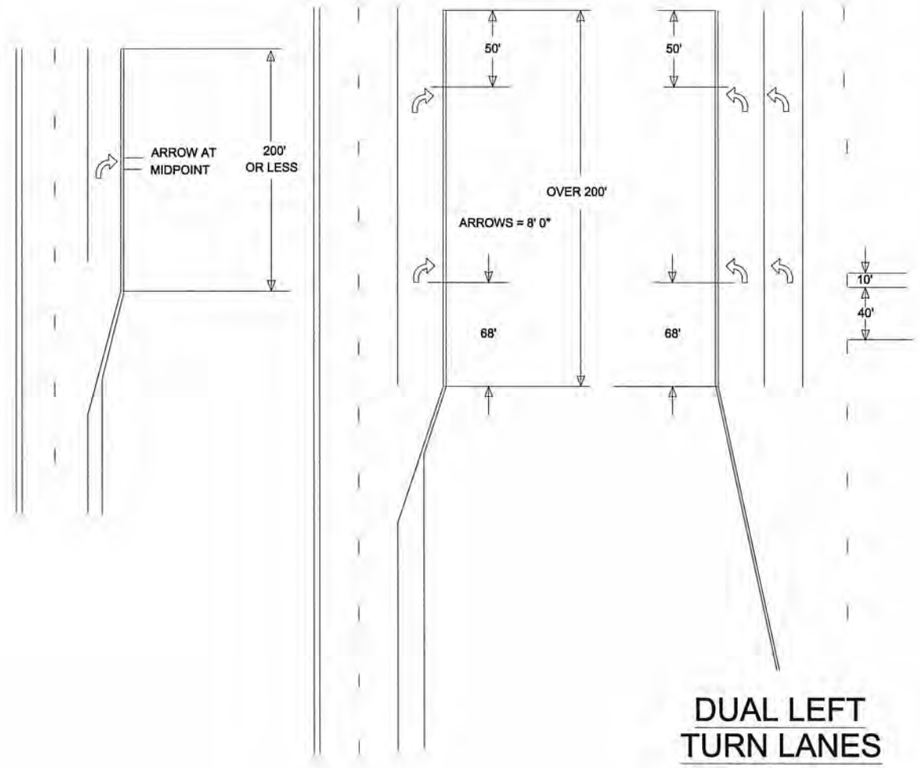

DUAL LEFT TURN LANES

TYPICAL MARKINGS FOR LEFT TURN ISLANDS

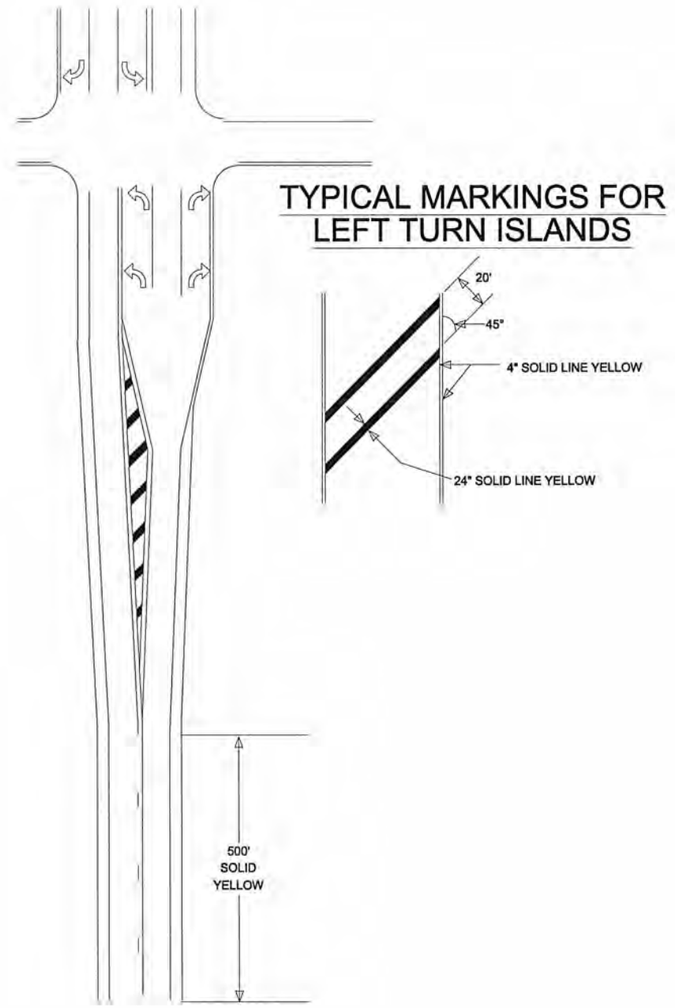

NO	DATE	BY	CKD	APPR	REVISION

NAME: P:\16-01-00\CSAH 116\Base\Traffic\Signing_Striping.dwg

I HEREBY CERTIFY THAT THIS PLAN WAS PREPARED BY ME OR UNDER MY DIRECT SUPERVISION AND THAT I AM A DULY REGISTERED PROFESSIONAL ENGINEER UNDER THE LAWS OF THE STATE OF MINNESOTA.

PRINT NAME: MATTHEW J. JOHN

SIGNATURE:

DATE: 4/6/2016 REG. NO. 51639

DRAWN BY RLB DATE 2/6/14

DESIGN BY RLB DATE 2/6/14

CHECKED BY JR DATE 2/6/14

ANOKA COUNTY

ANOKA COUNTY HIGHWAY DEPT.

STATE PROJECT NO.

STATE AID PROJECT NO.

STATE AID PROJECT NO.

COUNTY PROJECT NO. 16-15-116

SIGNING & STRIPING DETAILS

Sheet 17 of 23 Sheets

MARKINGS FOR PEDESTRIAN CROSSWALKS

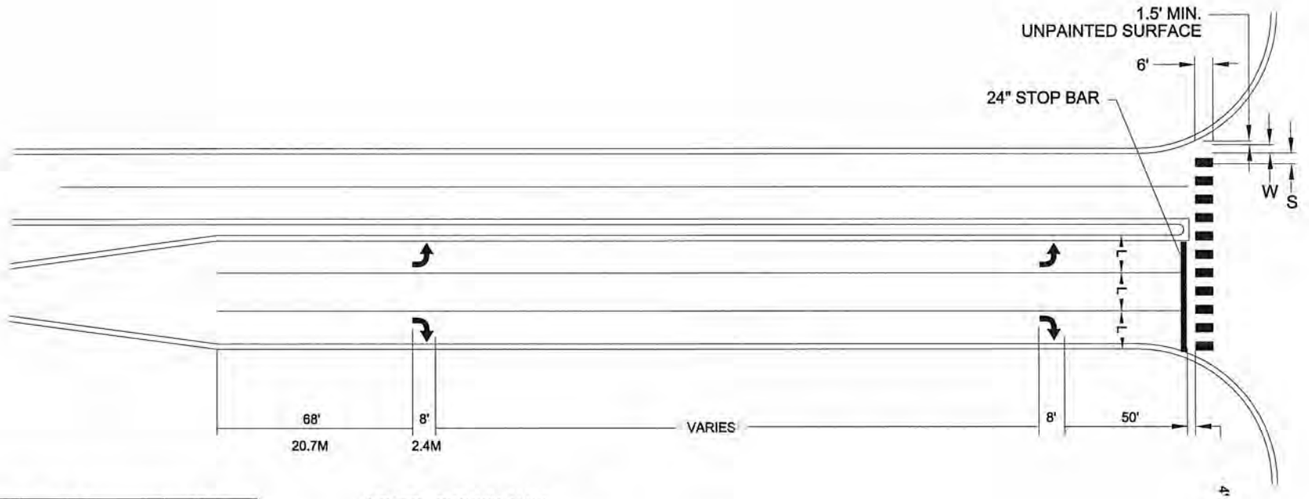

(L) WIDTH OF INSIDE LANE	(W) WIDTH OF PAINTED AREAS	(S) WIDTH OF SPACE
9'	2.0'	2.5'
10'	2.5'	2.5'
11'	2.5'	3.0'
12'	3.0'	3.0'
13'	3.0'	3.5'

NOTES: CROSSWALKS:

1.) PAINTED AREAS ARE TO BE CENTERED ON CENTER AND LANE LINES, EVEN IF INTERSECTION IS NOT ALIGNED.

2.) LOCATION OF ZEBRA CROSSWALKS AND STOP BARS, SIGNAL LOOPS AND PED RAMPS ARE APPROXIMATE. FINAL LOCATIONS ARE TO BE DETERMINED AND FIELD VERFIED DURING CONSTRUCTION BY THE FIELD ENGR.

3.) ZEBRA CROSSWALKS ARE TO BE PARALLEL TO THE DRIVING LANE OR LANES. EVEN IF THE STREET IS ON AN ANGLE TO THE INTERSECTION.

4.) A MIN. OF 1.5' (450mm) CLEAR DISTANCE MUST BE LEFT ADJACENT TO THE CURB. IF LAST PAINTED AREA FALLS INTO THIS AREA, IT MUST BE OMITTED.

5.) ON TWO LANE STREETS, USE SPACING SHOWN FOR AN 11' (3.3mm) INSIDE LANE.

NO	DATE	BY	CKD	APPR	REVISION

NAME:

I HEREBY CERTIFY THAT THIS PLAN WAS PREPARED BY ME OR UNDER MY DIRECT SUPERVISION AND THAT I AM A DULY REGISTERED PROFESSIONAL ENGINEER UNDER THE LAWS OF THE STATE OF MINNESOTA.

PRINT NAME: MATTHEW J. JOHN

SIGNATURE: Matthew J. John

DATE: 4/6/2016 REG. NO. 51639

DRAWN BY RLB DATE 2/6/14

DESIGN BY RLB DATE 2/6/14

CHECKED BY JR DATE 2/6/14

ANOKA COUNTY

ANOKA COUNTY HIGHWAY DEPT.

STATE PROJECT NO. _____

STATE AID PROJECT NO. _____

STATE AID PROJECT NO. _____

COUNTY PROJECT NO. 15-26-116

SIGNING & STRIPING DETAILS

Sheet 18 of 23 Sheets

2294

FOR REFERENCE PURPOSES ONLY

LOOP DETECTORS			
NUMBER	SIZE (FEET)	FUNCTION	LOCATION
D1-1,D1-2	6' x 6'	1	10' AND 40'
D2-1,D2-2	6' x 6'	1	440'
D3-1,D3-2	6' x 6'	1	10' AND 40'
D4-1	6' x 6'	3,8	465'
D4-2	6' x 6' AND 6'x10'	7	AS SHOWN
D4-3,D4-4	2-6' x 6'	1	-5' AND 4'
D5-1,D5-2	6' x 6'	1	10' AND 40'
D6-1	6' x 6'	1	475'
D7-1,D7-2	6' x 6'	1	10' AND 40'
D8-1	6' x 6'	3,8	475'
D8-2	6' x 6' AND 6'x10'	7	AS SHOWN
D8-3,D8-4	2-6' x 6'	1	-5' AND 4'

LOOP DETECTORS FUNCTIONS
1) CALL AND EXTEND
3) EXTEND ONLY
7) DELAY CALL/IMMEDIATE EXTEND
8) CARRY OVER (STRETCH)
NOTE:
LOCATION = DISTANCE FROM STOP BAR TO FRONT OF LOOP DETECTOR

SIGNAL INDICATIONS ALL INDICATIONS SHALL BE 12" LED						
FACE	R	Y	G	RLTA	YLTA	GLTA
1-1,1-2				←	←	←
2-1,2-2,2-3	●	●	●			
3-1,3-2				←	←	←
4-1,4-2,4-3	●	●	●			
5-1,5-2				←	←	←
6-1,6-2,6-3	●	●	●			
7-1,7-2				←	←	←
8-1,8-2,8-3	●	●	●			

SIGNAL SYSTEM OPERATION

THE SIGNAL SYSTEM FLASH MODE IS ALL RED.

NORMAL OPERATION IS 8 PHASE, WITH PHASE 1, 3, 5, AND 7 BEING PROTECTED LEFT TURN PHASES.

PHASES 2 AND 6 ARE ON VEHICLE RECALL.

SCALE IN FEET
0 10 20 40

NOTES:
1) THE EXACT LOCATION OF POLES, FOUNDATIONS, LOOP DETECTORS AND HANDHOLES SHALL BE DETERMINED IN THE FIELD BY THE ENGINEER.
2) EACH SIGNAL FACE SHALL HAVE A BACKGROUND SHIELD.
3) ALL VEHICLE INDICATIONS AND ALL PEDESTRIAN SIGNAL INDICATIONS SHALL BE LED.
4) LUMINAIRES SHALL BE "COBRAHEAD" STYLE.
5) A 3/4" HALF COUPLING, 3/4 " PIPE NIPPLE AND CONDUIT OUTLET BODY FOR EMERGENCY VEHICLE PREEMPTION EQUIPMENT SHALL BE F&I 6' FROM THE END OF EACH MAST ARM.
6) FOR SERVICE CABINET DETAILS SEE SHEET NO. 54.
7) FOR N.M.C. LOOP DETAILS SEE SHEET NO. 53.
8) FOR SIGN DETAILS SEE SHEET NO. 55.
9) (INTERCONNECT) DENOTES ITEMS TO BE MEASURED AND PAID FOR UNDER ITEM 2565-601 (TRAFFIC CONTROL INTERCONNECTION)

MATCHLINE - CR 116 WB STA. 1076+00

MATCHLINE - CR 56 SB STA. 73+00

MATCHLINE - CR 56 SB STA. 78+50

CR 116 (BUNKER LAKE BLVD.) (55 MPH)

CR 56 (RAMSEY BLVD.) (55 MPH)

MATCHLINE - CR 116 WB STA. 1079+50

CONTROLLER PHASING, PEDESTRIAN INDICATIONS AND PUSH BUTTONS

DATE: 3/2/2006 TIME: 3:24:55 PM
FILENAME: K:\vr2\Ramsey-City\3132_000\sw\prdgn\sw\plan\sht\cr56_sig8l.dgn

DRAWN BY: SFH
CHECKED BY: BDP
CERTIFIED BY _____ LIC. NO. 22405 DATE 3-1-06
LICENSED PROFESSIONAL ENGINEER

TKDA
TOLTZ, KING, DUVALL, ANDERSON AND ASSOCIATES, INCORPORATED
ENGINEERS • ARCHITECTS • PLANNERS SAINT PAUL, MINNESOTA

INTERSECTION LAYOUT - SYSTEM "B"
CR 56 (RAMSEY BLVD) / CR 116 (BUNKER LK BLVD)

C.P. 05-20
Sheet No. 61 of 94 Sheets

NO	DATE	BY	CKD	APPR	REVISION		
						03/30/2016	11:02:23 AM

NAME: P:\16-01-00\CSAH_116(RamseyBlvd-BasaltSt)\Base\PROPOSED\PROPOSED.dgn

I HEREBY CERTIFY THAT THIS PLAN WAS PREPARED BY ME OR UNDER MY DIRECT SUPERVISION AND THAT I AM A DULY LICENSED PROFESSIONAL ENGINEER UNDER THE LAWS OF THE STATE OF MINNESOTA.
PRINT NAME: MATTHEW J. JOHN
SIGNATURE:
DATE: 4/6/2016 LICENSE NO. 51839

DRAWN BY SPH DATE 03/30/2016
DESIGN BY SAT DATE 03/30/2016
CHECKED BY MJJ DATE 03/30/2016

ANOKA COUNTY HIGHWAY DEPT.

COUNTY PROJECT 16-15-116

SIGNAL PLAN
STA 00+00 TO 00+00
Sheet 19 of 23 Sheets

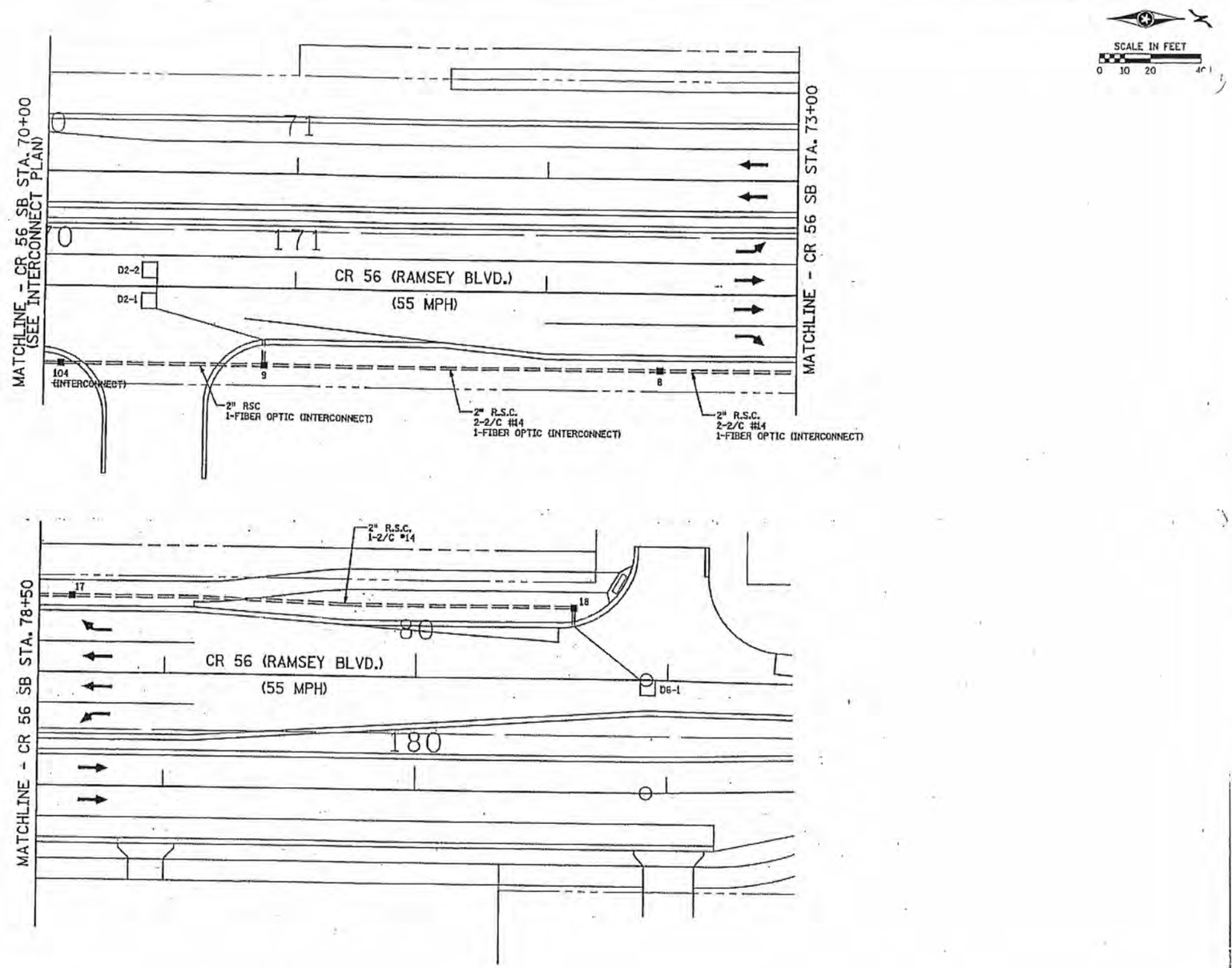

FOR REFERENCE PURPOSES ONLY

DATE: 3/2/2006 TIME: 3:24:59 PM
FILENAME: K:\n-z\Ramsey-City\13132_000\twy-brdg\twy\pln-sh\cr56_sig82.dgn

DRAWN BY: SFH CHECKED BY: BDP	CERTIFIED BY [signature] LICENSED PROFESSIONAL ENGINEER LIC. NO. 22405 DATE 3-1-06	TKDA TOLTZ, KING, DUVALL, ANDERSON AND ASSOCIATES, INCORPORATED ENGINEERS·ARCHITECTS·PLANNERS SAINT PAUL, MINNESOTA	MATCHLINE LAYOUT - SYSTEM "B" CR 56 (RAMSEY BLVD) / CR116 (BUNKER LK BLVD)	C.P. 05-20 Sheet No. 62 of 94 Sheets

NO	DATE	BY	CKD	APPR	REVISION	03/30/2016	11:02:27 AM

NAME: P:\16-01-00\CSAH_116(RamseyBlvd-BasaltSt)\Base\PROPOSED\PROPOSED.dgn

I HEREBY CERTIFY THAT THIS PLAN WAS PREPARED BY ME OR UNDER MY DIRECT SUPERVISION AND THAT I AM A DULY LICENSED PROFESSIONAL ENGINEER UNDER THE LAWS OF THE STATE OF MINNESOTA.
PRINT NAME: MATTHEW J. JOHN
SIGNATURE: [signature]
DATE: 4/6/2016 LICENSE NO. 51639

DRAWN BY SPH DATE 03/30/2016
DESIGN BY SAT DATE 03/30/2016
CHECKED BY MJJ DATE 03/30/2016

ANOKA COUNTY
ANOKA COUNTY HIGHWAY DEPT.

COUNTY PROJECT 16-15-116

SIGNAL PLAN
STA 00+00 TO 00+00
Sheet 20 of 23 Sheets

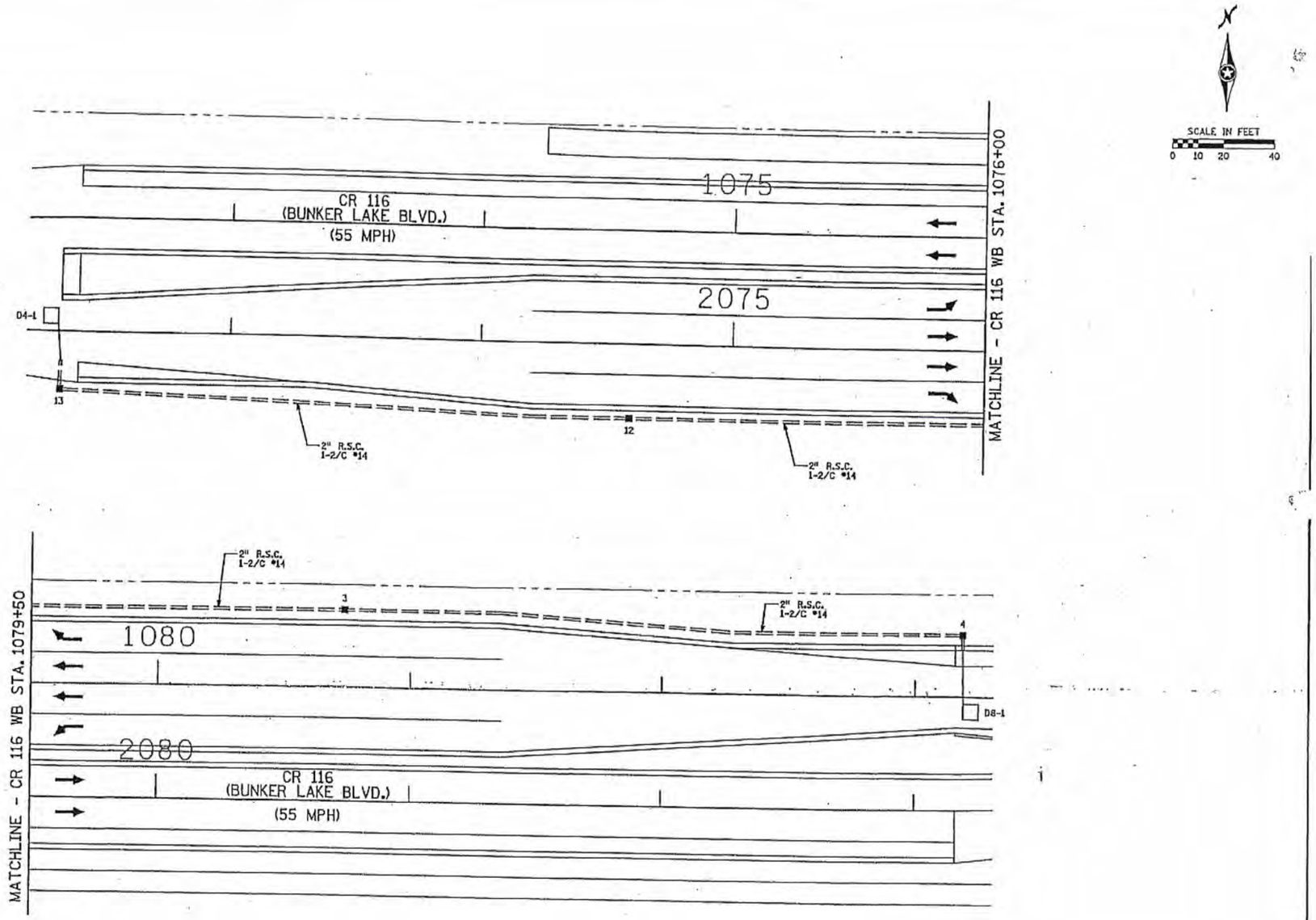

FOR REFERENCE PURPOSES ONLY

DATE: 3/2/2006 TIME: 3:25:02 PM
FILENAME: K:\rz\Ramsey-City\3132_000\twy-prdg\twy\pln-sht\cr56_sig83.dgn

DRAWN BY: SFH CHECKED BY: BDP	CERTIFIED BY Joseph Wasser LICENSED PROFESSIONAL ENGINEER LIC. NO. 22405 DATE 3-1-06	TKDA TOLTZ, KING, DUVALL, ANDERSON AND ASSOCIATES, INCORPORATED ENGINEERS·ARCHITECTS·PLANNERS SAINT PAUL, MINNESOTA	MATCHLINE LAYOUT - SYSTEM "B" CR 56 (RAMSEY BLVD) / CR 116 (BUNKER LK BLVD)
			C.P. 05-20 Sheet No. 63 of 94 Sheets

NO	DATE	BY	CKD	APPR	REVISION	03/30/2016	11:02:31 AM

NAME: P:\16-01-00\CSAH_116(RamseyBlvd-BasaltSt)\Base\PROPOSED\PROPOSED.dgn

I HEREBY CERTIFY THAT THIS PLAN WAS PREPARED BY ME OR UNDER MY DIRECT SUPERVISION AND THAT I AM A DULY LICENSED PROFESSIONAL ENGINEER UNDER THE LAWS OF THE STATE OF MINNESOTA.
PRINT NAME: MATTHEW J. JOHN
SIGNATURE: Matt J. John
DATE: 4/6/2016 LICENSE NO. 51639

DRAWN BY SPH DATE 03/30/2016
DESIGN BY SAT DATE 03/30/2016
CHECKED BY MJJ DATE 03/30/2016

ANOKA COUNTY
ANOKA COUNTY HIGHWAY DEPT.

COUNTY PROJECT 16-15-116

SIGNAL PLAN
STA 00+00 TO 00+00
Sheet 21 of 23 Sheets

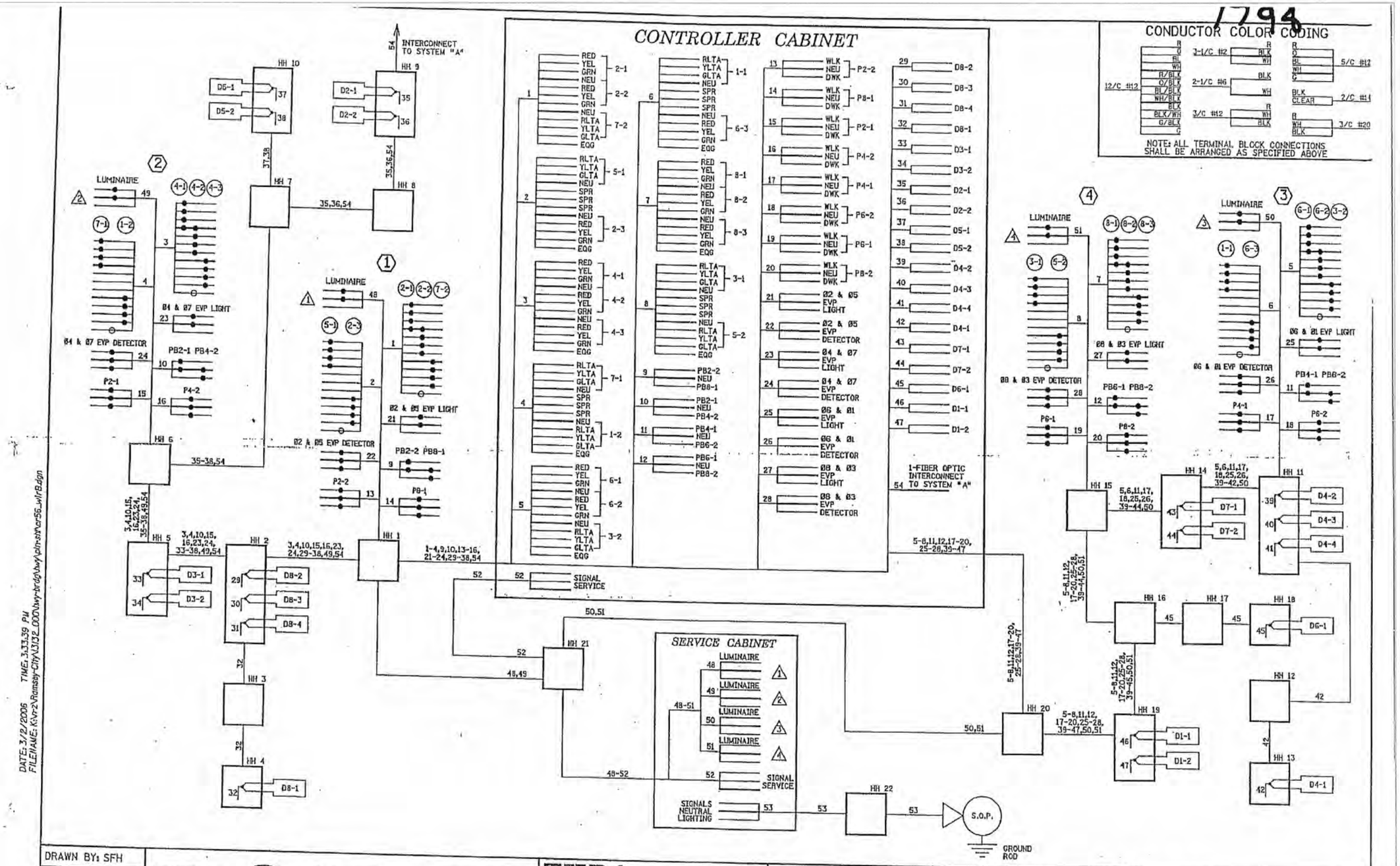

FOR REFERENCE PURPOSES ONLY

DRAWN BY: SFH	CERTIFIED BY [signature] LICENSED PROFESSIONAL ENGINEER LIC. NO. 22405 DATE 3-1-06	TKDA TOLTZ, KING, DUVALL, ANDERSON AND ASSOCIATES, INCORPORATED ENGINEERS·ARCHITECTS·PLANNERS SAINT PAUL, MINNESOTA	WIRE DIAGRAM - SYSTEM "B" CR 56 (RAMSEY BLVD) / CR 116 (BUNKER LK BLVD)
CHECKED BY: BDP			C.P. 05-20 Sheet No. 64 of 94 Sheets

NO	DATE	BY	CKD	APPR	REVISION	03/30/2016	11:02:37 AM

NAME: P:\16-01-00\CSAH_116(RamseyBlvd-BasaltSt)\Base\PROPOSED\PROPOSED.dgn

I HEREBY CERTIFY THAT THIS PLAN WAS PREPARED BY ME OR UNDER MY DIRECT SUPERVISION AND THAT I AM A DULY LICENSED PROFESSIONAL ENGINEER UNDER THE LAWS OF THE STATE OF MINNESOTA.

PRINT NAME: MATTHEW J. JOHN

SIGNATURE: [signature]

DATE: 4/6/2016 LICENSE NO. 51639

DRAWN BY SPH DATE 03/30/2016

DESIGN BY SAT DATE 03/30/2016

CHECKED BY MJJ DATE 03/30/2016

ANOKA COUNTY

ANOKA COUNTY HIGHWAY DEPT.

COUNTY PROJECT 16-15-116

SIGNAL PLAN

STA 00+00 TO 00+00

Sheet 22 of 23 Sheets

7798

SCALE IN FEET
0 10 20 40

NOTES:

1) THE EXACT LOCATION OF HANDHOLES SHALL BE DETERMINED IN THE FIELD BY THE ENGINEER.

2) (INTERCONNECT) DENOTES ITEMS TO BE MEASURED AND PAID FOR UNDER ITEM 2565-601 (TRAFFIC CONTROL INTERCONNECTION

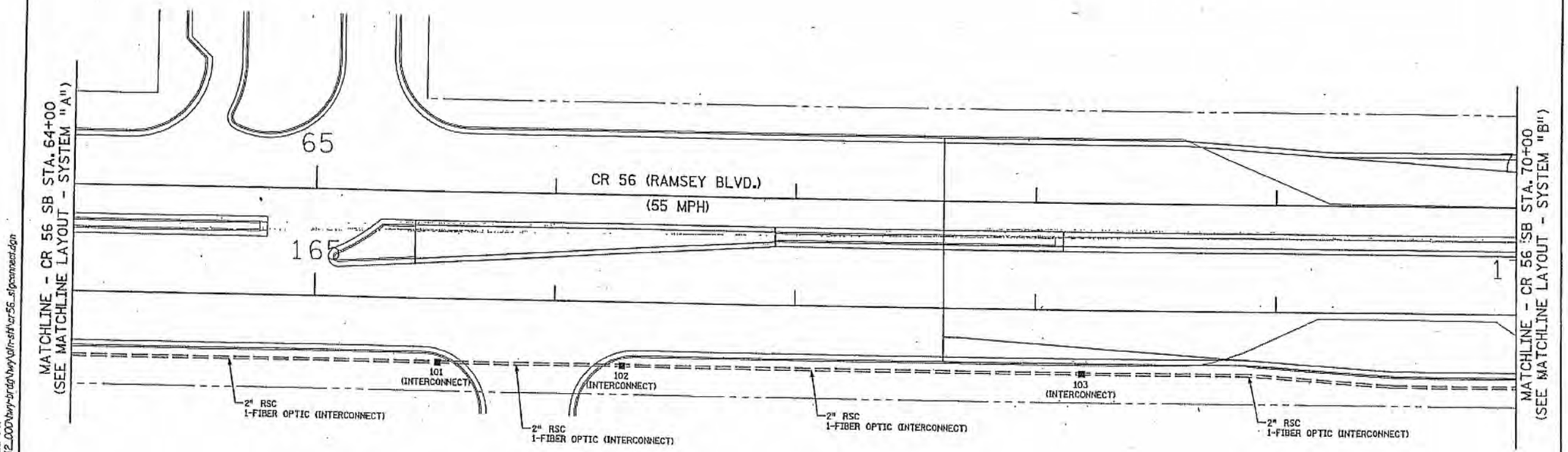

FOR REFERENCE PURPOSES ONLY

DATE: 3/2/2006 TIME: 3:20:53 PM
FILENAME: K:\vr-2\Ramsey-City\13132.000\hwy-brdg\hwy\sln-sht\sr56_sfpconnect.dgn

DRAWN BY: SFH	CERTIFIED BY _____ LICENSED PROFESSIONAL ENGINEER LIC. NO. 22405 DATE 3-1-06	TKDA TOLTZ, KING, DUVALL, ANDERSON AND ASSOCIATES, INCORPORATED ENGINEERS·ARCHITECTS·PLANNERS SAINT PAUL, MINNESOTA	TRAFFIC SIGNAL INTERCONNECT CR 56 (RAMSEY BOULEVARD) STA. 64+00 TO 70+0
CHECKED BY: BDP			C.P. 05-20 Sheet No. 65 of 94 Sheets

NO	DATE	BY	CKD	APPR	REVISION		
						03/30/2016	11:02:40 AM

NAME: P:\16-01-00\CSAH_116(RamseyBlvd-BasaltSt)\Base\PROPOSED\PROPOSED.dgn

I HEREBY CERTIFY THAT THIS PLAN WAS PREPARED BY ME OR UNDER MY DIRECT SUPERVISION AND THAT I AM A DULY LICENSED PROFESSIONAL ENGINEER UNDER THE LAWS OF THE STATE OF MINNESOTA.
PRINT NAME: MATTHEW J. JOHN
SIGNATURE: _____
DATE: 4/6/2016 LICENSE NO 51639

DRAWN BY SPH DATE 03/30/2016
DESIGN BY SAT DATE 03/30/2016
CHECKED BY MJJ DATE 03/30/2016

ANOKA COUNTY HIGHWAY DEPT.

COUNTY PROJECT 16-15-116

SIGNAL PLAN
STA 00+00 TO 00+00
Sheet 23 of 23 Sheets