MINNESOTA DEPARTMENT OF TRANSPORTATION

CITY OF EAST BETHEL ANOKA COUNTY, MINNESOTA

CONSTRUCTION PLAN FOR GRADING, BITUMINOUS PAVING, CONCRETE CURB AND GUTTER, AND MISCELLANEOUS CONSTRUCTION

LOCATED ON DAVENPORT STREET NE	FROM 35' SOUTH OF 186TH AVE NE	TO VIKING BOULEVARD
LOCATED ON 187TH LANE NE	FROM TRUNK HIWAY 65	TO DAVENPORT STREET NE
LOCATED ON 186TH AVE NE	FROM FRONTAGE ROAD	TO DAVENPORT STREET NE
LOCATED ON VIKING BOULEVARD	FROM 525' EAST OF HIWAY 65	TO 1563' EAST OF HIWAY 65

STATE AID PROJ. NO. 203-127-001
STATE PROJ. NO. 0208-166

GROSS LENGTH	4161.00	FEET 0.788	MILES
BRIDGES-LENGTH		FEET	MILES
EXCEPTIONS-LENGTH		FEET	MILES
NET LENGTH	4161.00	FEET 0.788	MILES

STATE AID PROJ. NO. 203-111-005
STATE PROJ. NO. 0208-166

GROSS LENGTH	414.00	FEET 0.078	MILES
BRIDGES-LENGTH		FEET	MILES
EXCEPTIONS-LENGTH		FEET	MILES
NET LENGTH	414.00	FEET 0.078	MILES

STATE AID PROJ. NO. 203-113-003
STATE PROJ. NO. 0208-166

GROSS LENGTH	466.00	FEET 0.088	MILES
BRIDGES-LENGTH		FEET	MILES
EXCEPTIONS-LENGTH		FEET	MILES
NET LENGTH	466.00	FEET 0.088	MILES

186TH AVE NE
STATE PROJ. NO. 0208-166

GROSS LENGTH	747.00	FEET 0.141	MILES
BRIDGES-LENGTH		FEET	MILES
EXCEPTIONS-LENGTH		FEET	MILES
NET LENGTH	747.00	FEET 0.141	MILES

VIKING BOULEVARD
STATE PROJ. NO. 0208-166

GROSS LENGTH	1038.00	FEET 0.197	MILES
BRIDGES-LENGTH		FEET	MILES
EXCEPTIONS-LENGTH		FEET	MILES
NET LENGTH	1038.00	FEET 0.197	MILES

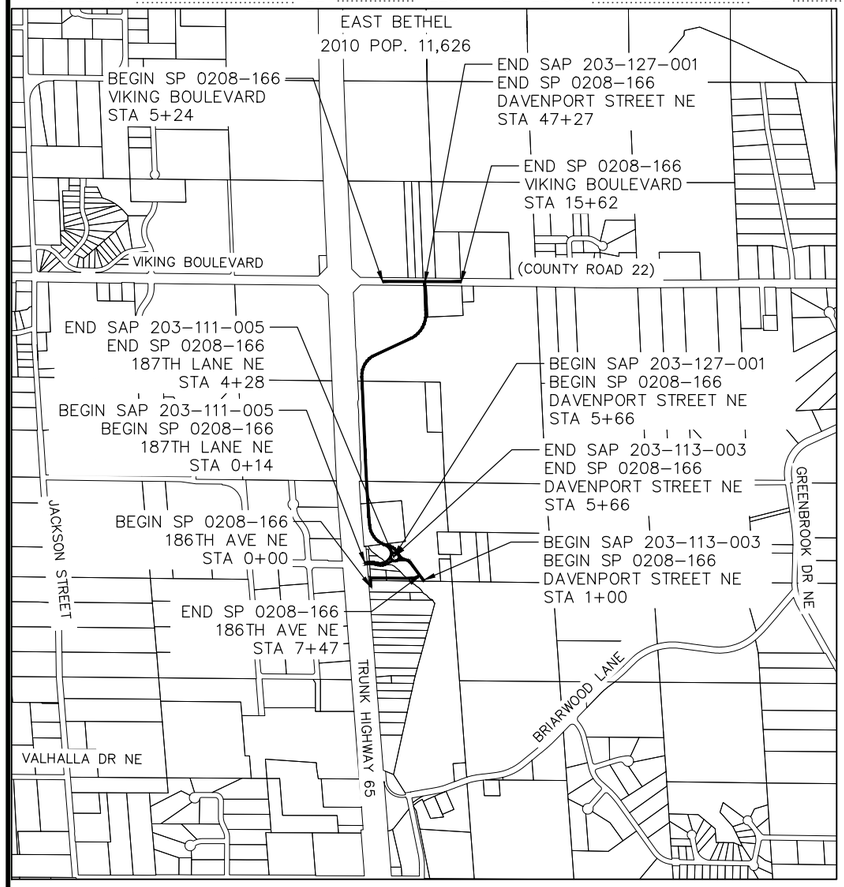

AGREEMENT NO. XXXXXX
CITY OF EAST BETHEL
SP 0208-166 (TH 65=005)
STATE FUNDS
METRO DISTRICT

STATE AID APPROVALS:

Date:
District State Aid Engineer: Reviewed for Compliance with State-Aid Rules/Policy

Date:
Approved for State Aid Funding: State Aid Engineer

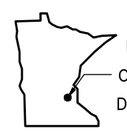

PROJECT LOCATION
COUNTY :ANOKA
DISTRICT :METRO

SECTION 29 & 32, T 33N, R 23W

N

1000 0 1000 2000
SCALE IN FEET

DESIGN DESIGNATION 187TH LANE NE

Design ESALS	= 361,000		
ADT (Current Year) 2020	= 1,500	Design Speed 30	MPH
ADT (Future Year) 2040	= 4,200	Based on STOPPING	Sight Distance
DHV (Design Hr. Vol.)	= 410	Height of eye 3.5'	Height of object 2.0'
D (Directional Distr.)	= 85 %	Design Speed not achieved at: N/A	
T (Heavy Commercial)	= 3.5 %		
R-VALUE	= 50		
PAVEMENT DESIGN	= 10 TON		

DESIGN DESIGNATION DAVENPORT STREET NE

Design ESALS	= 197,000		
ADT (Current Year) 2020	= 0	Design Speed 30	MPH
ADT (Future Year) 2040	= 3,100	Based on STOPPING	Sight Distance
DHV (Design Hr. Vol.)	= 300	Height of eye 3.5'	Height of object 2.0'
D (Directional Distr.)	= 85 %	Design Speed not achieved at: ROUND-A-BOUT	
T (Heavy Commercial)	= 3.5 %		
R-VALUE	= 50		
PAVEMENT DESIGN	= 10 TON		

DESIGN DESIGNATION 186TH AVE NE

Design ESALS	= 139,00		
ADT (Current Year) 2020	= 0	Design Speed 30	MPH
ADT (Future Year) 2040	= 1,100	Based on STOPPING	Sight Distance
DHV (Design Hr. Vol.)	= 110	Height of eye 3.5'	Height of object 2.0'
D (Directional Distr.)	= 85 %	Design Speed not achieved at: N/A	
T (Heavy Commercial)	= 3.5 %		
R-VALUE	= 50		
PAVEMENT DESIGN	= 10 TON		

STATE PROJ. NO. 0208-166

GOVERNING SPECIFICATIONS

THE 2018 EDITION OF THE MINNESOTA DEPARTMENT OF TRANSPORTATION "STANDARD SPECIFICATIONS FOR CONSTRUCTION" SHALL GOVERN.

ALL TRAFFIC CONTROL DEVICES SHALL CONFORM AND BE PLACED IN ACCORDANCE TO THE MOST RECENT EDITION OF THE "MINNESOTA MANUAL ON UNIFORM TRAFFIC CONTROL DEVICES" (MNMUTCD) AND PART VI, "FIELD MANUAL FOR TEMPORARY TRAFFIC CONTROL ZONE LAYOUTS".

INDEX

THIS PLAN CONTAINS 112 SHEETS

I HEREBY CERTIFY THAT THIS PLAN WAS PREPARED BY ME OR UNDER MY DIRECT SUPERVISION AND THAT I AM A DULY LICENSED PROFESSIONAL ENGINEER UNDER THE LAWS OF THE STATE OF MINNESOTA.

PRINT NAME: CRAIG J. JOCHUM LICENSE # 23461

DATE: 8/7/20 SIGNATURE: Craig J. Jochum

RECOMMENDED FOR APPROVAL 2020
COUNTY ENGINEER

RECOMMENDED FOR APPROVAL 2020
DISTRICT TRANSPORTATION ENGINEER

RECOMMENDED FOR APPROVAL 2020
DISTRICT MATERIALS ENGINEER

RECOMMENDED FOR APPROVAL 2020
DISTRICT WATER RESOURCES/HYDRAULICS ENGINEER

RECOMMENDED FOR APPROVAL 2020
DISTRICT TRAFFIC ENGINEER

RECOMMENDED FOR APPROVAL 2020
STATE PRE-LETTING ENGINEER

OFFICE OF LAND MANAGEMENT APPROVAL 2020
DIRECTOR, LAND MANAGEMENT

APPROVED 2020
STATE DESIGN ENGINEER

PLAN REVISIONS		
DATE	SHEET NO.	APPROVER

I HEREBY CERTIFY THAT THE FINAL FIELD REVISIONS, IF ANY, WERE PREPARED BY ME OR UNDER MY DIRECT SUPERVISION AND THAT I AM A DULY LICENSED PROFESSIONAL ENGINEER UNDER THE LAWS OF THE STATE OF MINNESOTA.

PRINT NAME: ..... LICENSE #. .....

DATE: ..... SIGNATURE: .....

S.A.P. 203-127-001, 203-111-005, 203-113-003
STATE PROJ. NO. 0208-116 (TH 65 =005) SHEET NO. 1 OF 109 SHEETS

Aug 19, 2020 - 1:06pm
K:\MUNICIPAL\EB351\ENGINEERING\EB351 TITLE1.dwg

EB351

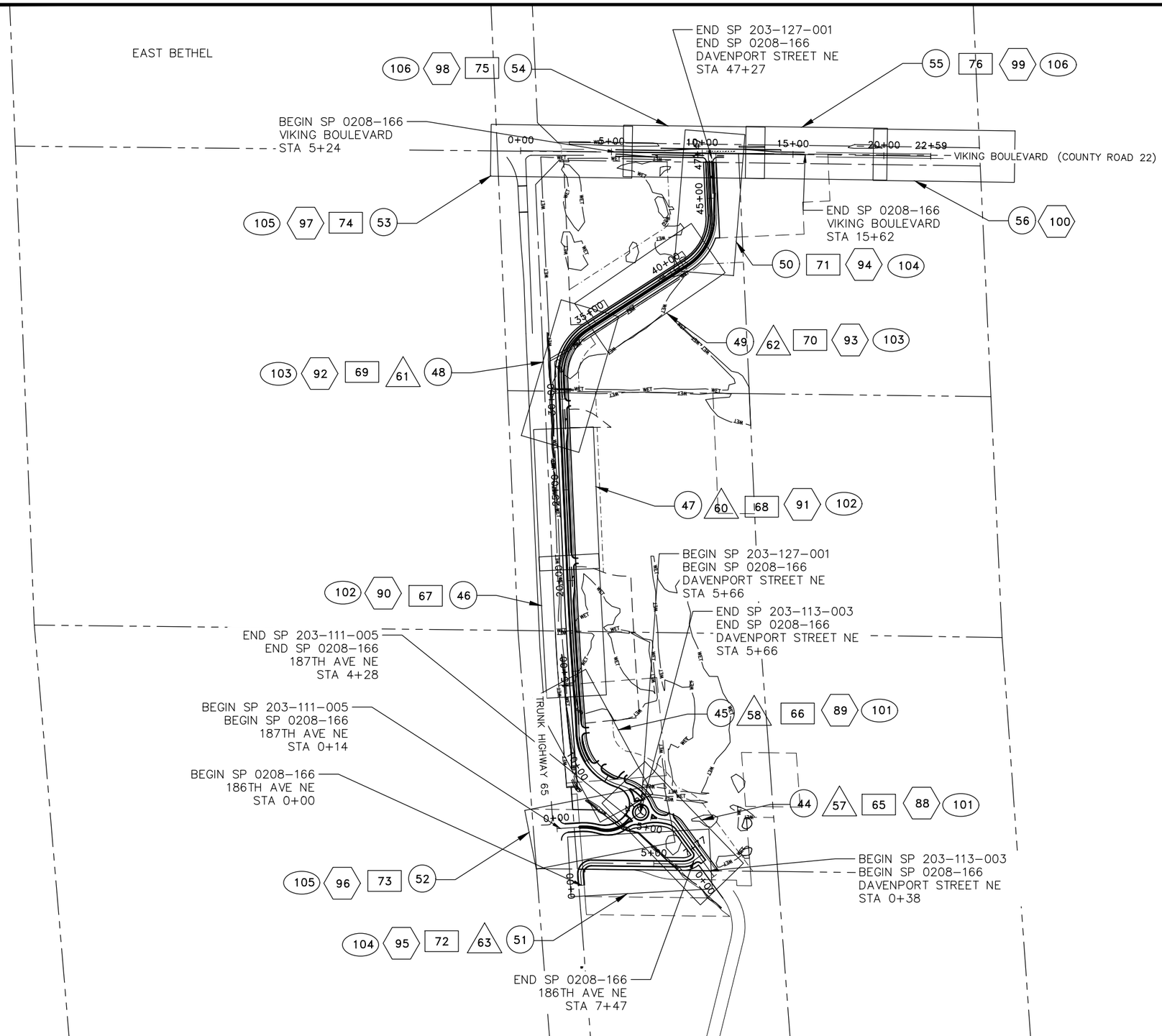

LEGEND

- XX — EXISTING TOPOGRAPHY AND REMOVALS
- XX — SANITARY SEWER AND WATERMAIN CONSTRUCTION PLAN
- XX — STREET AND STORM SEWER CONSTRUCTION PLAN
- XX — EROSION CONTROL
- XX — SIGNING AND STRIPING

N

300 0 300 600
SCALE IN FEET

DATE	REVISION

I hereby certify that this plan, specification, or report was prepared by me or under my direct supervision and that I am a duly Licensed Professional Engineer under the laws of the State of Minnesota.

CRAIG J. JOCHUM, P.E.
Date 8/7/20 Lic. No. 23461

DESIGNED BY: CJJ
DRAWN BY: SGJ
CHECKED BY: TAE

Hakanson Anderson
Civil Engineers and Land Surveyors
3601 Thurston Ave., Anoka, Minnesota 55303
763-427-5860 FAX 763-427-0520
www.hakanson-anderson.com

STATE PROJ. NO 0208-166 (TH65=005)
SAP 203-127-001, SAP 203-111-005,
SAP 203-113-003

GENERAL LAYOUT

TH 65 EAST SERVICE ROAD PROJECT

SHEET 2 OF 109 SHEETS

EB351

Aug 19, 2020 - 1:06pm
K:\MUNICIPAL\EB351\ENGINEERING\EB351 GENERAL LAYOUT.dwg

GENERAL CONSTRUCTION AND SOILS NOTES:

1. TOP OF THE GRADING SUBGRADE IS DEFINED AS THE BOTTOM OF THE CLASS 5 AGGREGATE BASE. ALL UNSTABLE MATERIAL SUCH AS TOPSOIL, SILTS, ORGANIC MATERIALS, MUCK, ETC. ENCOUNTERED DURING EXCAVATION WHICH IS NOT ACCOUNTED FOR IN THE ESTIMATED QUANTITIES WILL BE PAID AS "COMMON EXCAVATION".
2. STRIP AND STOCKPILE ALL INPLACE TOPSOIL AND SLOPE DRESSING IN AREAS TO BE DISTURBED BY CONSTRUCTION AND REUSE AS SLOPE DRESSING. IN AREAS OF STREET, SHOULDER, AND INTERSECTION CONSTRUCTION, THE EXPOSED SAND SHALL BE SURFACE COMPACTED TO AT LEAST 100% OF THE STANDARD PROCTOR MAXIMUM DRY DENSITY, ASTM D698, IN AT LEAST THE UPPER 3 FT.
3. UNLESS OTHERWISE SHOWN IN THESE PLANS, THE GRADING SUBGRADE SHALL BE CONSTRUCTED OF SUITABLE GRADING MATERIAL. THE FILL SHALL BE PLACED IN 8" TO 10" LOOSE LIFTS, AND COMPACTED TO 100% OF THE STANDARD PROCTOR MAXIMUM DRY DENSITY. ALL IMPORTED GRANULAR MATERIALS SHALL ALSO BE COMPACTED AS PREVIOUSLY DISCUSSED.
4. SUITABLE GRADING MATERIAL FOR THIS PROJECT SHALL CONSIST OF GRANULAR BORROW AND ALL ONSITE SOILS ENCOUNTERED WITH THE EXCEPTION OF TOPSOIL, SILT, DEBRIS, ORGANIC MATERIAL AND OTHER UNSTABLE MATERIAL. THE MATERIAL SHALL HAVE A CLASSIFICATION OF SP, SM OR SP-SM (USCS CLASSIFICATIONS).
5. IN ANY PAVEMENT WIDENING THE CONTRACTOR SHALL STRIVE TO SUBSTANTIALLY MATCH BACKFILL MATERIAL WITH IN PLACE SOILS TO FORESTALL ABRUPT FROST DIFFERENTIAL. GRANULAR FILL SHALL NOT BE PLACED BESIDE NON GRANULAR SOILS AND VICE VERSA.
6. WHEN PLACING NEW PAVEMENT ADJACENT TO INPLACE PAVEMENT CUT VERTICALLY TO THE BOTTOM OF INPLACE SURFACING OR TOP OF GRADING SUBGRADE WHICHEVER IS DEEPER AT A 1(V):2(H) TO THE BOTTOM OF EXCAVATION.
7. PROVIDE A SAW CUT WHEN PLACING NEW PAVEMENT ADJACENT TO INPLACE PAVEMENT AND AT TERMINI OF CONSTRUCTION TO ENSURE A UNIFORM JOINT.
8. BITUMINOUS AND CONCRETE ITEMS DISTURBED BY CONSTRUCTION SHALL BECOME THE PROPERTY OF THE CONTRACTOR AND SHALL BE DISPOSED OF IN ACCORDANCE WITH MN/DOT SPEC. 2104.
9. USE TACK COAT BETWEEN ALL BITUMINOUS MIXTURES. THE BITUMINOUS TACK COAT MATERIAL SHALL BE APPLIED AT A UNIFORM RATE OF 0.05 GAL/SY TO 0.07 GAL/SY BETWEEN BITUMINOUS LAYERS. THE APPLICATION RATES ARE FOR UNDILUTED EMULSIONS.
10. PERFORMANCE GRADED (PG) ASPHALT BINDER PG 58-28, SPEC. 3151, SHALL BE USED FOR ALL BITUMINOUS MIXES ON THIS PROJECT. SPECIFIC PG GRADES SHALL BE STATED IN THE SPECIAL PROVISIONS AND AT THE END OF THE MIX DESIGNATION NUMBER SHOWN ON THE TYPICAL SECTION.
11. THE BITUMINOUS MIXTURES SHALL MEET THE REQUIREMENTS OF SPECIFICATIONS 2360 AND 3139.
12. IF NECESSARY, THE UTILITY COMPANIES WILL RELOCATE THEIR FACILITIES CONCURRENTLY WITH THE CONSTRUCTION OPERATIONS UNDER THIS CONTRACT. CONTRACTOR SHALL SCHEDULE CONSTRUCTION IN COOPERATION WITH UTILITY RELOCATION.
13. CATEGORY 3 EROSION CONTROL BLANKET SHALL BE PLACED AS SHOWN ON THE PLANS AND IN AREAS OF POSSIBLE EROSION AS DIRECTED BY THE ENGINEER.
14. USE CLASS C BEDDING FOR ALL STORM SEWER.
15. ALL TRENCH AND OTHER EXCAVATIONS GREATER THAN 24 INCHES DEEP SHALL BE BACKFILLED AT THE END OF EACH WORK DAY. EXTRA WORK REQUIRED TO BACKFILL AND CORRESPONDINGLY REMOVE MATERIAL THE NEXT WORK DAY SHALL BE INCIDENTAL.
16. ALL LABOR, MATERIAL, EQUIPMENT AND WORK REQUIRED TO PROTECT CONCRETE CURB AGAINST COLD WEATHER SHALL BE INCIDENTAL.
17. THE CONTRACTOR SHALL POST THE SWPPP, AND OTHER REQUIRED DOCUMENTS ON SITE. THE METHOD OF POSTING SHALL BE APPROVED BY THE ENGINEER.
18. PAVEMENT CONSTRUCTION AT VALVE BOXES, MANHOLE CASTINGS AND CURBS SHALL BE PER THE DETAILS SHOWN ON SHEET 8.
19. UTILITY COMPANIES MAY HAVE NEW CONDUITS THAT CROSS THE STREET IN CERTIAN LOCATIONS. IF INSTALLATION OF NEW CONDUITS IS REQUIRED THE UTILITY COMPANY WILL FURNISH THE CONDUIT AND CONTRACTOR SHALL INSTALL THEM. THIS WORK SHALL BE INCIDENTAL.

PERMANENT PAVEMENT MARKING GENERAL NOTES AND GUIDELINES:

1. THE ENGINEER'S INVOLVEMENT IN THE APPLICATION OF THE MATERIAL SHALL BE LIMITED TO FIELD CONSULTATION AND INSPECTION. THE CONTRACTOR WILL PLACE NECESSARY "SPOTTING" AT APPROPRIATE POINTS TO PROVIDE HORIZONTAL CONTROL FOR STRIPING AND TO DETERMINE NECESSARY STARTING AND CUTOFF POINTS. LONGITUDINAL JOINTS, PAVEMENT EDGES AND EXISTING MARKINGS MAY SERVE AS HORIZONTAL CONTROL WHEN SO DIRECTED.
2. EDGE LINES AND LANE LINES ARE TO BE BROKEN ONLY AT INTERSECTIONS WITH PUBLIC ROADS AND AT PRIVATE ENTRANCES IF THEY ARE CONTROLLED BY A YIELD SIGN, STOP SIGN OR TRAFFIC SIGNAL. THE BREAK POINT IS TO BE AT THE START OF THE RADIUS FOR THE INTERSECTION OR AT MARKED STOP LINES OR CROSSWALKS.
3. A TOLERANCE OF 1/4 INCH UNDER OR 1/4 OVER THE SPECIFIED WIDTH WILL BE ALLOWED FOR STRIPING PROVIDED THE VARIATION IS GRADUAL AND DOES NOT DETRACT FROM THE GENERAL APPEARANCE. BROKEN LINE SEGMENTS MAY VARY UP TO ONE-HALF FOOT FROM THE SPECIFIED LENGTHS PROVIDED THE OVER AND UNDER VARIATIONS ARE REASONABLY COMPENSATORY. ALIGNMENT DEVIATIONS FROM THE CONTROL GUIDE SHALL NOT EXCEED 1 INCH. MATERIAL SHALL NOT BE APPLIED OVER LONGITUDINAL JOINTS. ESTABLISHMENT OF APPLICATION TOLERANCES SHALL NOT RELIEVE THE CONTRACTOR OF THEIR RESPONSIBILITY TO COMPLY AS CLOSELY AS PRACTICABLE WITH THE PLANNED DIMENSIONS.
4. THE ROAD SURFACE SHALL BE CLEANED AT THE DIRECTION OF THE ENGINEER JUST PRIOR TO APPLICATION. PAVEMENT CLEANING SHALL CONSIST OF AT LEAST BRUSHING WITH A ROTARY BROOM (NON-METALLIC) OR AS RECOMMENDED BY THE MATERIAL MANUFACTURER AND ACCEPTABLE TO THE ENGINEER. THIS WORK SHALL BE INCIDENTAL.
5. THE EPOXY MARKING APPLICATION SHALL IMMEDIATELY FOLLOW THE PAVEMENT CLEANING. GLASS BEADS SHALL BE APPLIED IMMEDIATELY AFTER APPLICATION OF THE EPOXY RESIN LINE TO PROVIDE AN IMMEDIATE NO-TRACK SYSTEM.
6. FOR 20 MIL APPLICATIONS, GLASS BEADS SHALL BE APPLIED AT A RATE OF AT LEAST 25 LB/GAL. THE "NO-TRACKING" CONDITION SHALL BE DETERMINED ON AN APPLICATION OF SPECIFIED THICKNESS TO THE PAVEMENT AND COVERED WITH GLASS BEADS AT THE RATE OF AT LEAST 25 LB/GAL.
7. OPERATIONS SHALL BE CONDUCTED ONLY WHEN THE ROAD PAVEMENT SURFACE TEMPERATURES ARE 50 DEGREES (°F) OR GREATER.
8. PERMANENT PAVEMENT MARKINGS SHALL NOT BE PLACED OVER TEMPORARY TAPE MARKINGS.

LEGEND

- 903 — EXISTING CONTOUR
- RIGHT-OF-WAY
- SECTION LINE
- EXISTING EASEMENT
- PROPOSED PERMANENT DRAINAGE AND UTILITY EASEMENT
- PROPOSED TEMPORARY CONSTRUCTION EASEMENT
- W — DELINEATED WETLAND
- G — GAS MAIN
- T-BUR — BURIED TELEPHONE CABLE
- U-OH — OVERHEAD UTILITY
- P-OH — OVERHEAD ELECTRIC
- P-BUR — BURIED ELECTRIC
- WIRE FENCE
- CHAIN LINK FENCE
- EXISTING STORM SEWER
- EXISTING SANITARY SEWER
- PROPOSED STORM SEWER
- PROPOSED SANITARY SEWER
- PROPOSED WATERMAIN
- EXISTING CONCRETE CURB AND GUTTER
- PROPOSED CONCRETE CURB AND GUTTER
- DRIPLINE
- DECIDUOUS AND CONIFEROUS TREES
- UTILITY PEDESTAL
- POWER POLE
- GUY WIRE
- CATCH BASIN INLETS
- STORM SEWER MANHOLE
- STORM SEWER APRON
- M — MAILBOX
- SIGN
- 2/3 — DETAIL NUMBER / SHEET NUMBER
- SB-5 — SOIL BORING

DATE	REVISION

I hereby certify that this plan, specification, or report was prepared by me or under my direct supervision and that I am a duly Licensed Professional Engineer under the laws of the State of Minnesota.

CRAIG J. JOCHUM, P.E.
Date 8/7/20 Lic. No. 23461

DESIGNED BY: CJJ
DRAWN BY: SGJ
CHECKED BY: TAE

Hakanson Anderson
Civil Engineers and Land Surveyors
3601 Thurston Ave., Anoka, Minnesota 55303
763-427-5860 FAX 763-427-0520
www.hakanson-anderson.com

STATE PROJ. NO 0208-166 (TH65=005)
SAP 203-127-001, SAP 203-111-005,
SAP 203-113-003

LEGEND AND SOILS AND CONSTRUCTION NOTES

TH 65 EAST SERVICE ROAD PROJECT

THE FOLLOWING STANDARD PLATES, APPROVED BY THE FEDERAL HIGHWAY ADMINISTRATION, SHALL APPLY ON THIS PROJECT	
STANDARD PLATES	
PLATE NO.	**DESCRIPTION**
3000M	REINFORCED CONCRETE PIPE (6 SHEETS)
3006H	GASKET JOINT FOR R.C. PIPE (2 SHEETS)
3007F	SHEAR REINFORCEMENT FOR PRECAST DRAINAGE STRUCTURES
3100G	CONCRETE APRON FOR REINFORCED CONCRETE PIPE
3133D	RIPRAP AT RCP OUTLETS
3145G	CONCRETE PIPE OR PRECAST BOX CULVERT TIES
4003B	30" PRECAST CATCH BASIN - DESIGN N
4006L	MANHOLE OR CATCH BASIN PRECAST - DESIGNS G AND H
4007C	PRECAST MECHANICAL JOINT SEWER MANHOLE
4010H	CONCRETE SHORT CONE & ADJUSTING RING (SECTIONAL CONCRETE)
4011E	PRECAST CONCRETE BASE
4018A	MANHOLE OR CATCH BASIN (REDUCER CONE SECTION PRECAST) - DESIGN D
4020J	MANHOLE OR CATCH BASIN (FOR USE WITH OR WITHOUT TRAFFIC LOADS) (2 SHEETS)
4026A	CONCRETE ENCASED CONCRETE ADJUSTING RINGS
4101D	RING CASTING FOR MANHOLE OR CATCH BASIN
4110F	COVER CASTING FOR MANHOLE (FOR USE IN ALL TRAFFIC AREAS) – CASTING NO. 715 AND 716
4126F	CATCH BASIN FRAME CASTING – CASTING N0. 801
4143E	STOOL GRATE & CONCRETE FRAME (MEDIAN DRAINS) - CASTING NO. 731
4149C	GRATE CASTING FOR CATCH BASIN - CASTING NO. 810
4160D	CURB BOX CASTING FOR CATCH BASIN - CASTING NO. 823A AND 833A
4180J	MANHOLE OR CATCH BASIN STEP
7038A	DETECTABLE WARNING SURFACE TRUNCATED DOMES
7100H	CONCRETE CURB AND GUTTER (DESIGN B AND DESIGN V)
7102K	CONCRETE CURB AND GUTTER (DESIGN D, DESIGN S, AND DESIGN R)
7105C	CONCRETE MEDIAN (MOUNTABLE TYPE)
7107I	ENTRANCE NOSE (URBAN DESIGN)
7108G	EXIT NOSE (URBAN DESIGN)
7109C	MEDIAN NOSE AND ISLAND (UNDIVIDED TO DIVIDED ROADWAY)
7111J	INSTALLATION OF CATCH BASIN CASTINGS (CONCRETE CURB AND GUTTER)
7112C	INSTALLATION & REINFORCEMENT OF CATCH BASIN & MANHOLE CASTINGS (CONCRETE INTEGRANT CURBS)
7113A	CONCRETE APPROACH NOSE DETAIL
8000J	CHANNELIZERS
8002G	PERMANENT BARRICADE
9000E	APPROACHES AND ENTRANCES - RECOMMENDED STANDARDS

BASIS OF ESTIMATED QUANTITIES	
AGGREGATE BASE CLASS 5	100 lbs/yd^2/in
NON WEARING BITUMINOUS COURSE MIXTURE	110 lbs/yd^2/in
WEARING COURSE BITUMINOUS MIXTURE	110 lbs/yd^2/in
BITUMINOUS MATERIAL FOR TACK COAT	0.05 gal/yd^2
SEED MIXTURE 25-121	122 lbs/acre
SEED MIXTURE 35-221	36.5 lbs/acre
MULCH MATERIAL TYPE 1	2 ton/acre
TYPE 1, COMMERCIAL FERTILIZER	300 lbs/acre

INPLACE UTILITY TABULATION CONTACTS					
UTILITY OWNER	STREET	STATION	OFFSET	ITEM	REMARKS
CONNEXUS ENERGY	DAVENPORT STREET	8+35	1' RT	POWER POLE	REMOVE
CONNEXUS ENERGY	DAVENPORT STREET	8+36	140' LT TO 105' RT	OVERHEAD POWER	REMOVE
CONNEXUS ENERGY	DAVENPORT STREET	11+00 TO 32+00	70' LT	OVERHEAD POWER	LEAVE AS IS
CONNEXUS ENERGY	DAVENPORT STREET	47+65	750' LT TO 450' RT	OVERHEAD POWER	PROTECT
CONNEXUS ENERGY	226TH AVENUE	0+95	7' RT	POWER POLE	REMOVE
CONNEXUS ENERGY	226TH AVENUE	1+20	20' LT TO 20' RT	OVERHEAD POWER	REMOVE
CENTERPOINT ENERGY	DAVENPORT STREET	47+52	750' LT TO 450' RT	BURIED GAS	PROTECT
CENTERPOINT ENERGY	226TH AVENUE	1+00	90' LT TO 65' RIGHT	BURIED GAS	PROTECT
CENTURYLINK	DAVENPORT STREET	11+00 TO 32+00	70' LT	BURIED TELEPHONE	LEAVE AS IS
CENTURYLINK	DAVENPORT STREET	47+10	750' LT TO 450' RT	BURIED TELEPHONE	PROTECT
CENTURYLINK	DAVENPORT STREET	47+60	750' LT TO 450' RT	BURIED TELEPHONE	PROTECT
CENTURYLINK	187TH LANE	1+30	50' LT TO 50' RT	BURIED TELEPHONE	PROTECT
CENTURYLINK	226TH AVENUE	1+00	90' LT TO 65' RIGHT	BURIED TELEPHONE	PROTECT
MIDCONTINENT COMMUNICATIONS	DAVENPORT STREET	47+20	750' LT TO 450' RT	BURIED CABLE TV	PROTECT
ZAYO GROUP	DAVENPORT STREET	47+15	750' LT TO 450' RT	BURIED FIBER	PROTECT
CITY OF EAST BETHEL	DAVENPORT STREET	25+35	25' LT	SEWER MANHOLE	PROTECT
CITY OF EAST BETHEL	DAVENPORT STREET	25+45	40' LT	WATERMAIN	PROTECT
CITY OF EAST BETHEL	226TH AVENUE	0+00 TO 1+00	0'	SANITARY SEWER	PROTECT
CITY OF EAST BETHEL	226TH AVENUE	0+00 TO 1+00	10'RT	WATERMAIN	PROTECT

PUBLIC UTILITIES CONTACTS	
UTILITY OWNER	CONTACT NUMBER
CENTERPOINT ENERGY MINNESOTA GAS	800-778-9140
CENTURYLINK	800-283-4237
CITY OF EAST BETHEL PUBLIC WORKS	763-367-7876
CONNEXUS ENERGY	763-323-4215
MIDCONTINENT COMMUNICATIONS	605-271-0202
ZAYO GROUP, LLC	888-267-1063

Aug 19, 2020 – 1:07pm
K:\MUNICIPAL\EB351\ENGINEERING\EB351 DETAILS.dwg

DATE	REVISION

I hereby certify that this plan, specification, or report was prepared by me or under my direct supervision and that I am a duly Licensed Professional Engineer under the laws of the State of Minnesota.

CRAIG J. JOCHUM, P.E.
Date 8/7/20 Lic. No. 23461

DESIGNED BY: CJJ
DRAWN BY: SGJ
CHECKED BY: TAE

Hakanson Anderson
Civil Engineers and Land Surveyors
3601 Thurston Ave., Anoka, Minnesota 55303
763-427-5860 FAX 763-427-0520
www.hakanson-anderson.com

STATE PROJ. NO 0208-166 (TH65=005)
SAP 203-127-001, SAP 203-111-005,
SAP 203-113-003

INPLACE UTILITY TABULATION AND CONTACTS

TH 65 EAST SERVICE ROAD PROJECT

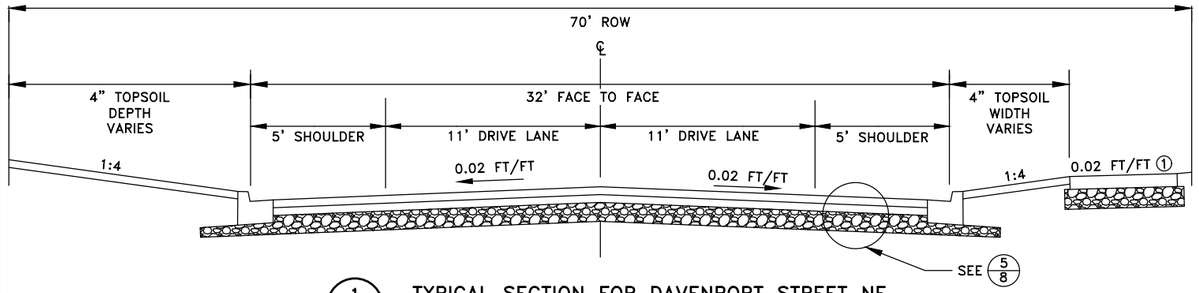

1/8 TYPICAL SECTION FOR DAVENPORT STREET NE

NO SCALE

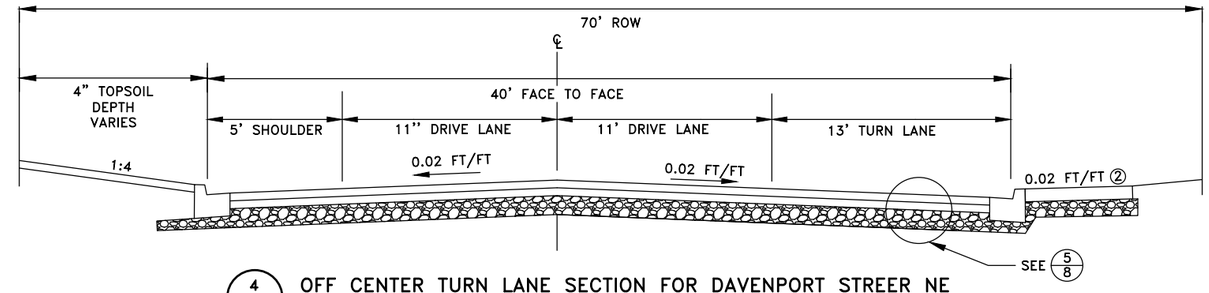

4/8 OFF CENTER TURN LANE SECTION FOR DAVENPORT STREER NE

NO SCALE

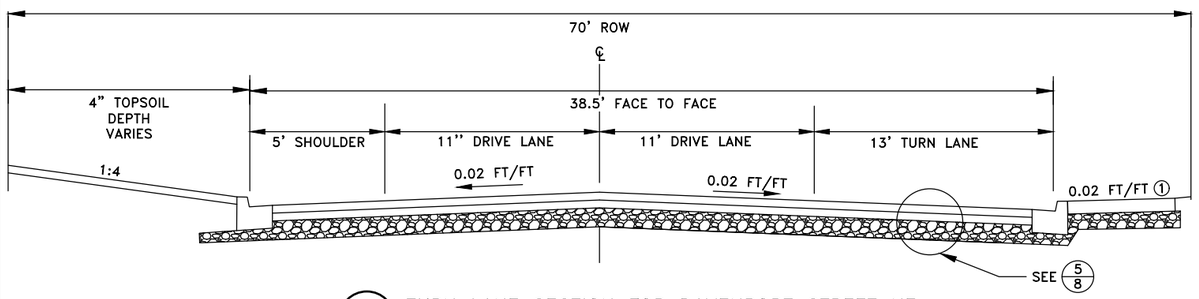

2/8 TURN LANE SECTION FOR DAVENPORT STREET NE

NO SCALE

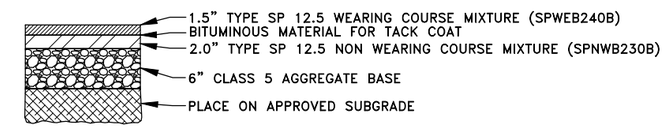

5/8 TYPICAL STREET SECTION

NO SCALE

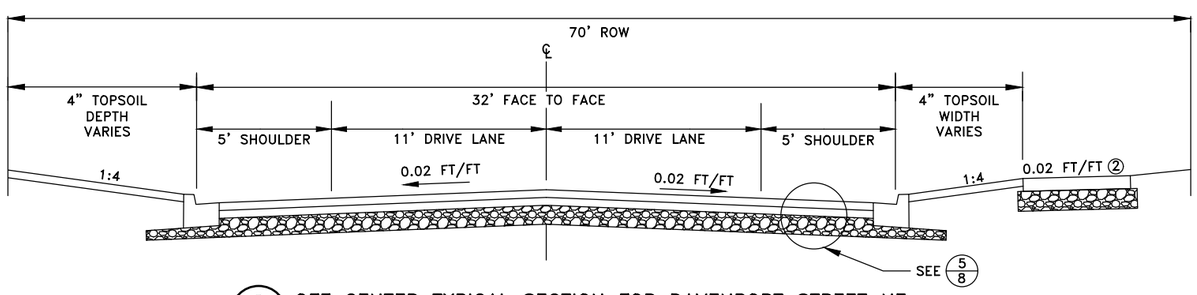

3/8 OFF CENTER TYPICAL SECTION FOR DAVENPORT STREET NE

NO SCALE

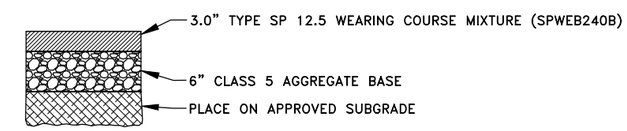

6/8 TYPICAL TRAIL SECTION

NO SCALE

REFERENCE NOTES:

① BITUMINOUS TRIAL WILL BE 8' WIDE AND SHALL BE PAVED 1' OFF OF THE RIGHT OF WAY UNLESS OTHERWISE NOTED. AT THE TURN LANES, THE TRAIL WILL BE PAVED 1' OFF THE RIGHT AWAY UP TO THE BACK OF THE CURB. SEE 6/8 FOR TYPICAL TRAIL SECTION.

② BITUMINOUS TRIAL WILL BE 8' WIDE AND SHALL BE PAVED 3' OFF OF THE RIGHT OF WAY UNLESS OTHERWISE NOTED. AT THE TURN LANES, THE TRAIL WILL BE PAVED 3' OFF THE RIGHT AWAY UP TO THE BACK OF THE CURB. SEE 6/8 FOR TYPICAL TRAIL SECTION.

DATE	REVISION

I hereby certify that this plan, specification, or report was prepared by me or under my direct supervision and that I am a duly Licensed Professional Engineer under the laws of the State of Minnesota.

CRAIG J. JOCHUM, P.E.
Date 8/7/20 Lic. No. 23461

DESIGNED BY: CJJ
DRAWN BY: SGJ
CHECKED BY: TAE

Hakanson Anderson
Civil Engineers and Land Surveyors
3601 Thurston Ave., Anoka, Minnesota 55303
763-427-5860 FAX 763-427-0520
www.hakanson-anderson.com

STATE PROJ. NO 0208-166 (TH65=005)
SAP 203-127-001, SAP 203-111-005,
SAP 203-113-003

TYPICAL SECTIONS

TH 65 EAST SERVICE ROAD PROJECT

EB351

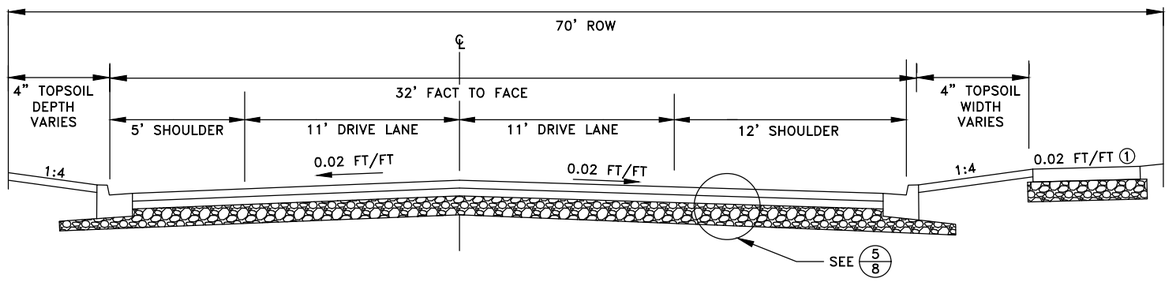

1/9 DAVENPORT STREET NE TRANSITION OUT OF ROUND-A-BOUT

NO SCALE

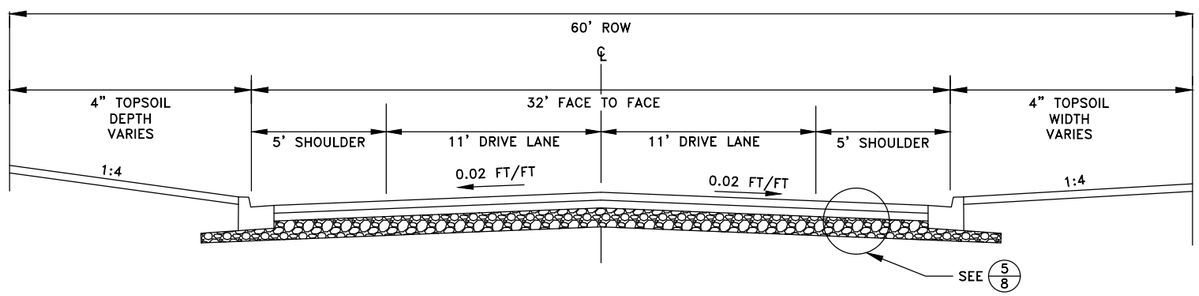

2/9 226TH AVENUE NE

NO SCALE

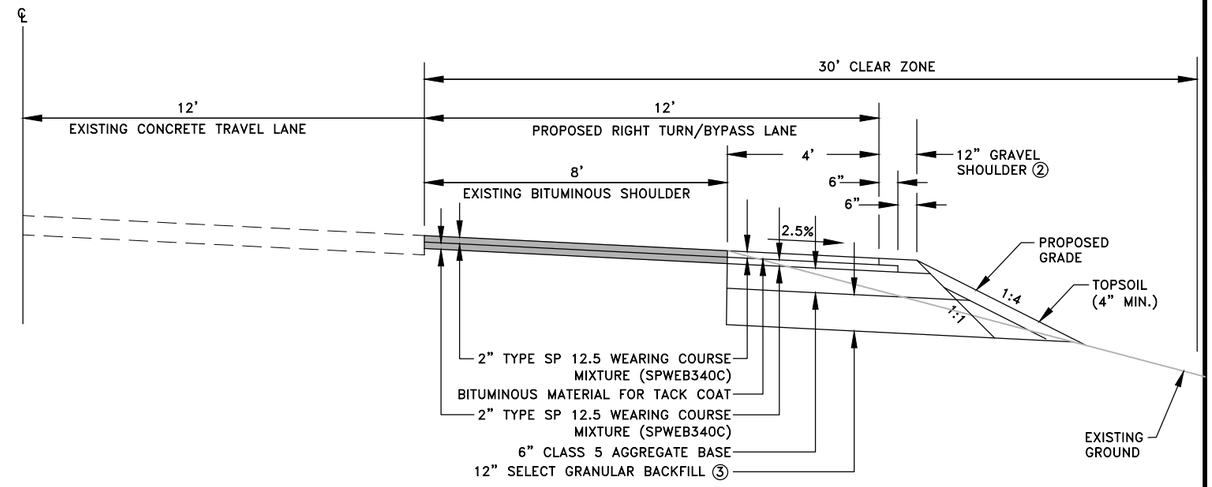

TYPICAL SECTION
VIKING BOULEVARD
3/9 RIGHT TURN LANE/BYPASS LANE

N.T.S.

REFERENCE NOTES:

① BITUMINOUS TRIAL WILL BE 8' WIDE AND SHALL BE PAVED 1' OFF OF THE RIGHT OF WAY. SEE 6/8 FOR TYPICAL TRAIL SECTION.

② AGGREGATE SHOULDER SHALL MEET THE REQUIREMENTS OF MN/DOT SPEC 3138, CLASS 2 VIRGIN MATERIAL.

③ SELECT GRANULAR BACKFILL SHALL MEET THE REQUIREMENTS OF MN/DOT SPEC 3149.2.D.3 ONSITE SOILS MEETING THE GRADATION OF SELECT GRANULAR BACKFILL MAY BE USED. FURNISHING AND INSTALLING GRANULAR BACKFILL SHALL BE INCIDENTAL. GRANULAR BACKFILL SHALL BE COMPACTED TO 100% STANDARD PROCTOR DENSITY WITHIN ROAD.

DATE	REVISION

I hereby certify that this plan, specification, or report was prepared by me or under my direct supervision and that I am a duly Licensed Professional Engineer under the laws of the State of Minnesota.

CRAIG J. JOCHUM, P.E.
Date 8/7/20 Lic. No. 23461

DESIGNED BY: CJJ
DRAWN BY: SGJ
CHECKED BY: TAE

Hakanson Anderson
Civil Engineers and Land Surveyors
3601 Thurston Ave., Anoka, Minnesota 55303
763-427-5860 FAX 763-427-0520
www.hakanson-anderson.com

STATE PROJ. NO 0208-166 (TH65=005)
SAP 203-127-001, SAP 203-111-005,
SAP 203-113-003

TYPICAL SECTIONS

TH 65 EAST SERVICE ROAD PROJECT

Aug 19, 2020 – 1:07pm
K:\MUNICIPAL\EB351\ENGINEERING\EB351 DETAILS.dwg

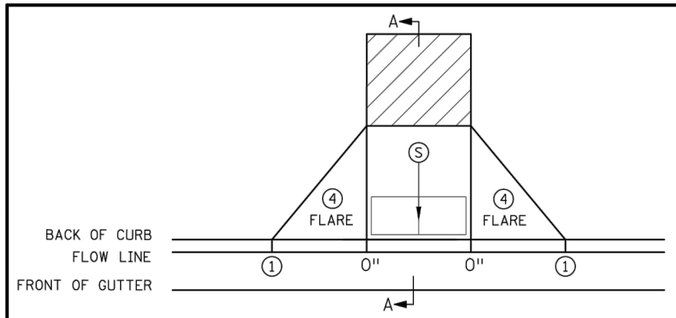

PERPENDICULAR

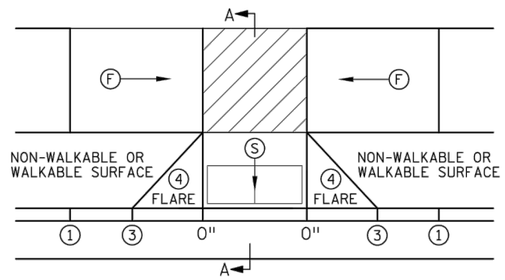

TIERED PERPENDICULAR

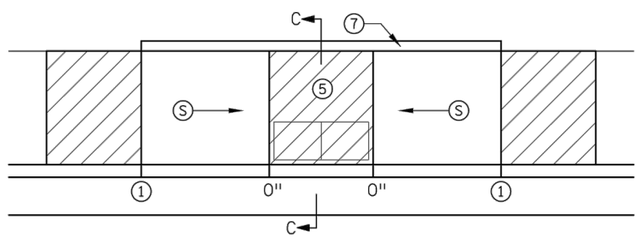

PARALLEL

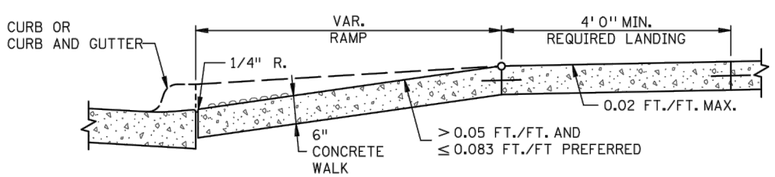

SECTION A-A

PERPENDICULAR/TIERED/DIAGONAL

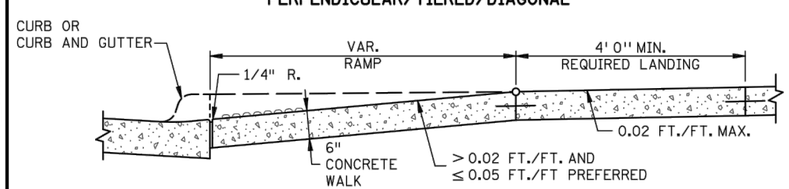

SECTION B-B

FAN

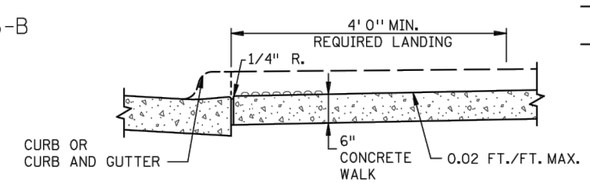

SECTION C-C

PARALLEL/DEPRESSED CORNER

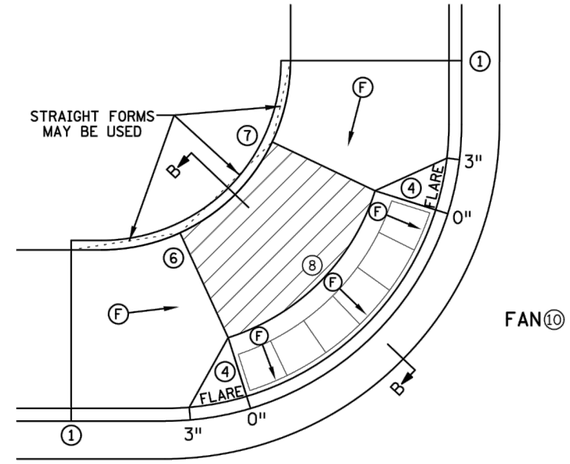

FAN 10

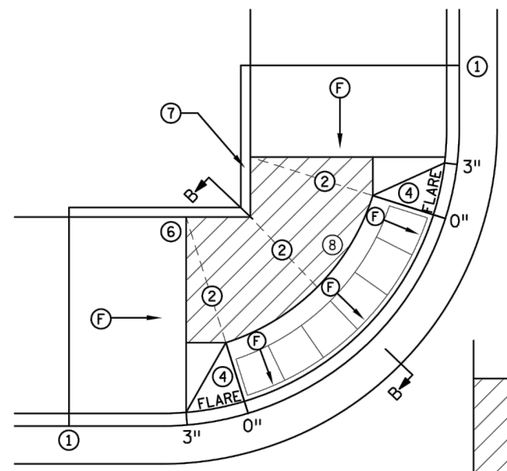

MODIFIED FAN 10

USED WHEN RIGHT-OF-WAY IS CONSTRAINED

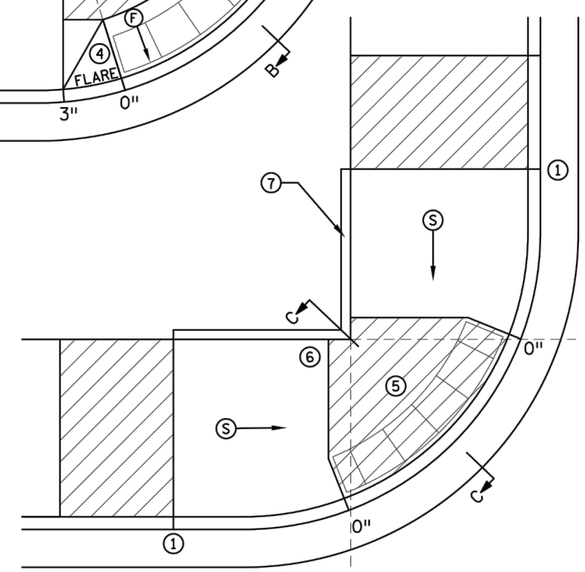

DEPRESSED CORNER

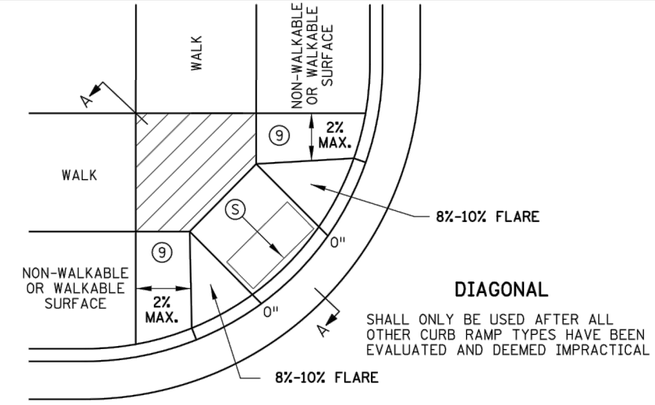

DIAGONAL

SHALL ONLY BE USED AFTER ALL OTHER CURB RAMP TYPES HAVE BEEN EVALUATED AND DEEMED IMPRACTICAL

NOTES:

LANDINGS SHALL BE LOCATED ANYWHERE THE PEDESTRIAN ACCESS ROUTE (PAR) CHANGES DIRECTION, AT THE TOP OF RAMPS THAT HAVE RUNNING SLOPES GREATER THAN 5.0%, AND IF THE APPROACHING WALK IS INVERSE GRADE GREATER THAN 2%.

INITIAL CURB RAMP LANDINGS SHALL BE CONSTRUCTED WITHIN 15' FROM THE BACK OF CURB, WITH 6' FROM THE BACK OF CURB BEING THE PREFERRED DISTANCE, ONLY APPLICABLE WHEN THE INITIAL RAMP RUNNING SLOPE IS OVER 5.0%.

SECONDARY CURB RAMP LANDINGS ARE REQUIRED FOR EVERY 30" OF VERTICAL RISE WHEN THE LONGITUDINAL RUNNING SLOPE IS GREATER THAN 5.0%.

CONTRACTION JOINTS SHALL BE CONSTRUCTED ALONG ALL GRADE BREAKS WITHIN THE PAR. 1/4" DEEP VISUAL JOINTS SHALL BE USED AT THE TOPS OF CONCRETE FLARES ADJACENT TO WALKABLE SURFACES.

ALL GRADE BREAKS WITHIN THE PAR SHALL BE PERPENDICULAR TO THE PATH OF TRAVEL, THUS BOTH SIDES OF A SLOPED WALKING SURFACE MUST BE EQUAL LENGTH. (EXCEPT AS STATED IN 6 BELOW.

TO ENSURE INITIAL RAMPS AND INITIAL LANDINGS ARE PROPERLY CONSTRUCTED, LANDINGS SHALL BE CAST SEPARATELY. FOLLOW SIDEWALK REINFORCEMENT DETAILS ON SHEET 6 AND THE ADA SPECIAL PROVISIONS - PROSECUTION OF WORK (ADA).

TOP OF CURB SHALL MATCH PROPOSED ADJACENT WALK GRADE.

WHEN THE BOULEVARD IS 4' WIDE OR LESS, THE TOP OF CURB TAPER SHALL MATCH THE RAMP SLOPES TO REDUCE NEGATIVE BOULEVARD SLOPES FROM THE TOP BACK OF CURB TO THE PAR.

ALL RAMP TYPES SHOULD HAVE A MINIMUM 3' LONG RAMP LENGTH.

4' MINIMUM WIDTH OF DETECTABLE WARNING IS REQUIRED FOR ALL RAMPS. DETECTABLE WARNINGS SHALL CONTINUOUSLY EXTEND FOR A MIN. OF 24" IN THE PATH OF TRAVEL. DETECTABLE WARNING TO COVER ENTIRE WIDTH OF SHARED-USE PATHS AND THE ENTIRE PAR WIDTH OF THE WALK. DETECTABLE WARNING SHOULD BE 6" LESS THAN THE PAR/TRAIL WIDTH. ARC LENGTH OF RADIAL DETECTABLE WARNINGS SHOULD NOT BE GREATER THAN 20 FEET.

RECTANGULAR DETECTABLE WARNINGS SHALL BE SETBACK 3" FROM THE BACK OF CURB. RADIAL DETECTABLE WARNINGS SHALL BE SETBACK 3" MINIMUM TO 6" MAXIMUM FROM THE BACK OF CURB.

1. MATCH FULL HEIGHT CURB.
2. 4' MINIMUM DEPTH LANDING REQUIRED ACROSS TOP OF RAMP.
3. 3" HIGH CURB WHEN USING A 3' LONG RAMP, 4" HIGH CURB WHEN USING A 4' LONG RAMP.
4. SEE SHEET 4 OF 6, TYPICAL SIDE TREATMENT OPTIONS, FOR DETAILS ON FLARES AND RETURNED CURBS, WHEN INITIAL LANDING IS AT FULL CURB HEIGHT.
5. DETECTABLE WARNINGS MAY BE PART OF THE 4' X 4' MIN. LANDING AREA IF IT IS NOT FEASIBLE TO CONSTRUCT THE LANDING OUTSIDE OF THE DETECTABLE WARNING AREA.
6. THE GRADE BREAK SHALL BE PERPENDICULAR TO THE BACK OF WALK. THIS WILL ENSURE THAT THE GRADE BREAK IS PERPENDICULAR TO THE DIRECTION OF TRAVEL. (TYPICAL FOR ALL)
7. WHEN ADJACENT TO GRASS, GRADING SHALL ALWAYS BE USED WHEN FEASIBLE. V CURB, IF USED, SHALL BE PLACED OUTSIDE THE SIDEWALK LIMITS WHEN RIGHT OF WAY ALLOWS. WHEN ADJACENT TO PARKING LOTS, CONCRETE OR BITUMINOUS TAPERS SHOULD BE USED OVER V CURB TO REDUCE TRIPPING HAZARDS AND FACILITATE SNOW & ICE REMOVAL.
8. A 7' MIN TOP RADIUS GRADE BREAK REQUIRED TO BE CONSTRUCTIBLE.
9. PAVE FULL WALK WIDTH.
10. "S" SLOPES ON FANS SHALL ONLY BE USED WHEN ALL OTHER FEASIBLE OPTIONS HAVE BEEN EVALUATED AND DEEMED IMPRACTICAL.

LEGEND

THESE LONGITUDINAL SLOPE RANGES SHALL BE THE STARTING POINT. IF SITE CONDITIONS WARRANT, LONGITUDINAL SLOPES UP TO 8.3% OR FLATTER ARE ALLOWED.

- S — INDICATES PEDESTRIAN RAMP - SLOPE SHALL BE BETWEEN 5.0% MINIMUM AND 8.3% MAXIMUM IN THE DIRECTION SHOWN AND THE CROSS SLOPE SHALL NOT EXCEED 2.0%.
- F — INDICATES PEDESTRIAN RAMP - SLOPE SHALL BE GREATER THAN 2.0% AND LESS THAN 5.0% IN THE DIRECTION SHOWN AND CROSS SLOPE SHALL NOT EXCEED 2.0%.
- LANDING AREA - 4' X 4' MIN. (5' X 5' MIN. PREFERRED) DIMENSIONS AND MAX 2.0% SLOPE IN ALL DIRECTIONS. LANDING SHALL BE FULL WIDTH OF INCOMING PARS.
- X" — CURB HEIGHT

REVISION:

APPROVED: JANUARY 23, 2017

OPERATIONS ENGINEER

MINNESOTA DEPARTMENT OF TRANSPORTATION

STANDARD PLAN 5-297.250 | 1 OF 6

APPROVED: 1-23-2017

REVISED:

STATE DESIGN ENGINEER

PEDESTRIAN CURB RAMP DETAILS

STATE PROJ. NO. 0208-166 (T.H.65) SHEET NO. 10 OF 109 SHEETS

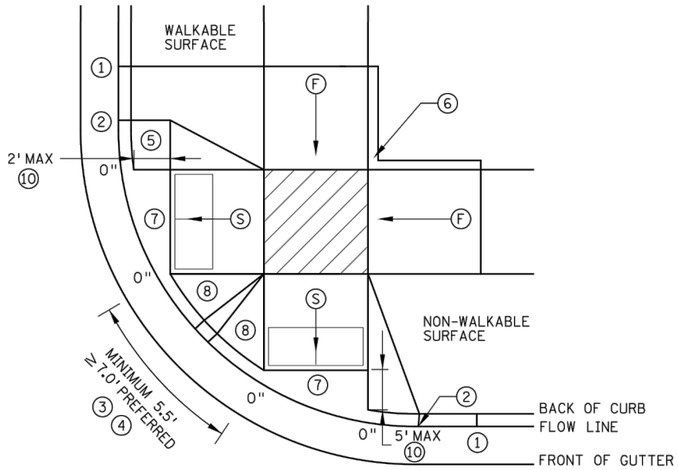

COMBINED DIRECTIONAL ⑨

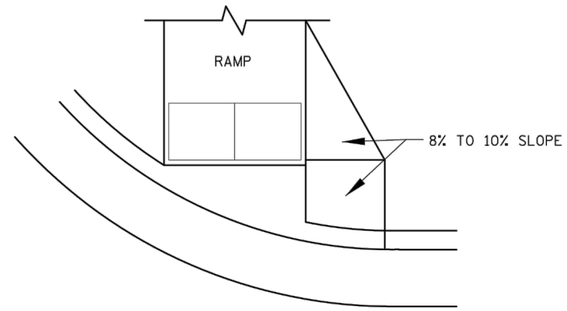

DIRECTIONAL RAMP WALKABLE FLARE

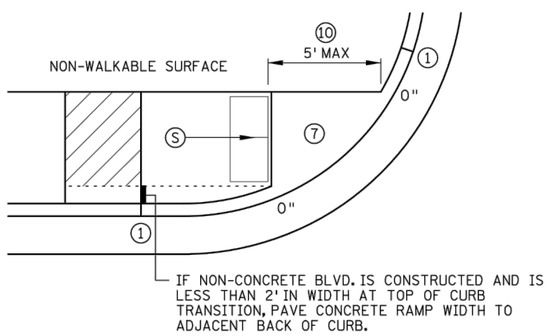

STANDARD ONE-WAY DIRECTIONAL ⑨

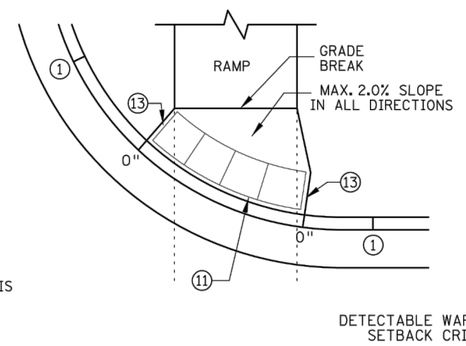

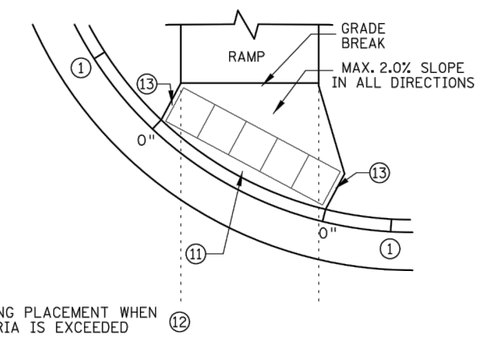

ONE-WAY DIRECTIONAL WITH DETECTABLE WARNING AT BACK OF CURB

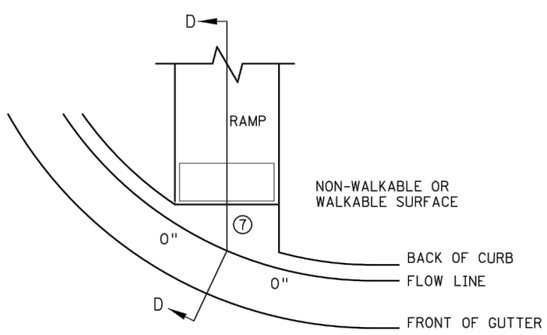

CURB FOR DIRECTIONAL RAMPS ⑭

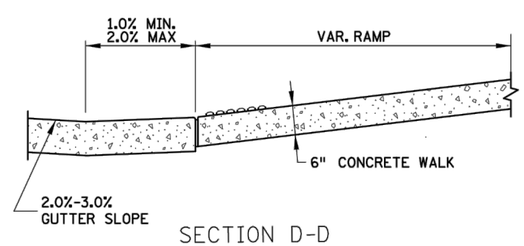

SECTION D-D

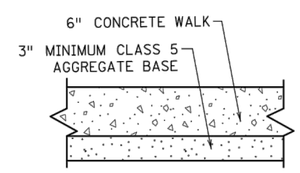

TYPICAL SIDEWALK SECTION WITHIN INTERSECTION CORNER

NOTES:

LANDINGS SHALL BE LOCATED ANYWHERE THE PEDESTRIAN ACCESS ROUTE (PAR) CHANGES DIRECTION, AT THE TOP OF RAMPS THAT HAVE RUNNING SLOPES GREATER THAN 5.0%, AND IF THE APPROACHING WALK IS INVERSE GRADE.

INITIAL CURB RAMP LANDINGS SHALL BE CONSTRUCTED WITHIN 15' FROM THE BACK OF CURB, WITH 6' FROM THE BACK OF CURB BEING THE PREFERRED DISTANCE, ONLY APPLICABLE WHEN THE INITIAL RAMP RUNNING SLOPE IS OVER 5.0%.

SECONDARY CURB RAMP LANDINGS ARE REQUIRED FOR EVERY 30" OF VERTICAL RISE WHEN THE LONGITUDINAL SLOPE IS GREATER THAN 5.0%.

CONTRACTION JOINTS SHALL BE CONSTRUCTED ALONG ALL GRADE BREAKS WITHIN THE PAR. 1/4" DEEP VISUAL JOINTS SHALL BE USED AT THE TOP GRADE BREAK OF CONCRETE FLARES ADJACENT TO WALKABLE SURFACES.

ALL GRADE BREAKS WITHIN THE PAR SHALL BE PERPENDICULAR TO THE PATH OF TRAVEL. THUS BOTH SIDES OF A SLOPED WALKING SURFACE MUST BE EQUAL LENGTH.

TO ENSURE INITIAL RAMPS AND INITIAL LANDINGS ARE PROPERLY CONSTRUCTED, LANDINGS SHALL BE CAST SEPARATELY. FOLLOW SIDEWALK REINFORCEMENT DETAILS ON SHEET 6 AND THE ADA SPECIAL PROVISION (PROSECUTION OF WORK).

TOP OF CURB SHALL MATCH PROPOSED ADJACENT WALK GRADE.

WHEN THE BOULEVARD IS 4' WIDE OR LESS, THE TOP OF CURB TAPER SHALL MATCH THE RAMP SLOPES TO REDUCE NEGATIVE BOULEVARD SLOPES FROM THE TOP BACK OF CURB TO THE PAR.

ALL RAMP TYPES SHOULD HAVE A MINIMUM 3' LONG RAMP LENGTH.

4' MINIMUM WIDTH OF DETECTABLE WARNING IS REQUIRED FOR ALL RAMPS. DETECTABLE WARNINGS SHALL CONTINUOUSLY EXTEND FOR A MIN. OF 24" IN THE PATH OF TRAVEL. DETECTABLE WARNING TO COVER ENTIRE WIDTH OF SHARED-USE PATH AND THE ENTIRE PAR WIDTH OF THE WALK. DETECTABLE WARNING SHOULD BE 6" LESS THAN THE PAR/PATH WIDTH. ARC LENGTH OF RADIAL DETECTABLE WARNINGS SHOULD NOT BE GREATER THAN 20 FEET.

RADIAL DETECTABLE WARNINGS SHALL BE SETBACK 3" MINIMUM TO 6" MAXIMUM FROM THE BACK OF CURB. SEE NOTES ⑩ & ⑪ FOR INFORMATION REGARDING RECTANGULAR DETECTABLE WARNING PLACEMENT.

① MATCH FULL CURB HEIGHT.

② 3" HIGH CURB WHEN USING A 3' LONG RAMP
4" HIGH CURB WHEN USING A 4' LONG RAMP.

③ 3" MINIMUM CURB HEIGHT (5.5' MIN. DISTANCE REQUIRED BETWEEN DOMES)
4" PREFERRED (7' MIN. DISTANCE REQUIRED BETWEEN DOMES).

④ THE "BUMP" IN BETWEEN THE RAMPS SHOULD NOT BE IN THE PATH OF TRAVEL FOR COMBINED DIRECTIONAL RAMPS. IF THIS OCCURS MODIFY THE RAMP LOCATION OR SWITCH RAMP TO A FAN/DEPRESSED CORNER.

⑤ WHEN USING CONCRETE PAVED FLARES ON THE OUTSIDE OF DIRECTIONAL RAMPS, AND ADJACENT TO A WALKABLE SURFACE, DIRECTIONAL RAMP FLARES SHOULD BE USED. SEE THE DETAIL ON THIS SHEET.

⑥ GRADING SHALL ALWAYS BE USED WHEN FEASIBLE. V CURB, IF USED, SHALL BE PLACED OUTSIDE THE SIDEWALK LIMITS WHEN RIGHT OF WAY ALLOWS. WHEN ADJACENT TO PARKING LOTS, CONCRETE OR BITUMINOUS TAPERS SHOULD BE USED OVER V CURB TO REDUCE TRIPPING HAZARDS AND FACILITATE SNOW & ICE REMOVAL.

⑦ MAX. 2.0% SLOPE IN ALL DIRECTIONS IN FRONT OF GRADE BREAK AND DRAIN TO FLOW LINE. SHALL BE CONSTRUCTED INTEGRAL WITH CURB AND GUTTER.

⑧ 8% TO 10% WALKABLE FLARE.

⑨ PLACE DOMES AT THE BACK OF CURB WHEN ALLOWABLE SETBACK CRITERIA IS EXCEEDED.

⑩ FRONT EDGE OF DETECTABLE WARNING SHALL BE SET BACK 2' MAXIMUM WHEN ADJACENT TO WALKABLE SURFACE, AND 5' MAXIMUM WHEN ADJACENT TO NON-WALKABLE SURFACE WITH ONE CORNER SET 3" FROM BACK OF CURB. A WALKABLE SURFACE IS DEFINED AS A PAVED SURFACE ADJACENT TO A CURB RAMP WITHOUT RAISED OBSTACLES THAT COULD MISTAKENLY BE TRAVERSED BY A USER WHO IS VISUALLY IMPAIRED.

⑪ RECTANGULAR DETECTABLE WARNINGS MAY BE SETBACK UP TO 9" FROM THE BACK OF CURB WITH CORNERS SET 3" FROM BACK OF CURB. IF 9" SETBACK IS EXCEEDED USE RADIAL DETECTABLE WARNINGS.

⑫ FOR DIRECTIONAL RAMPS WITH THE DETECTABLE WARNINGS PLACED AT THE BACK OF CURB, THE DETECTABLE WARNINGS SHALL COVER THE ENTIRE WIDTH OF THE WALK/PATH. THIS ENSURES A DETECTABLE EDGE AND HELPS ELIMINATE THE CURB TAPER OBSTRUCTING THE PATH OF PEDESTRIAN TRAVEL.

⑬ THE CONCRETE WALK SHALL BE FORMED AND CONSTRUCTED PERPENDICULAR TO THE BACK OF CURB. MAINTAIN 3" BETWEEN EDGE OF DOMES AND EDGE OF CONCRETE.

⑭ TO BE USED FOR ALL DIRECTIONAL RAMPS, EXCEPT WHERE DOMES ARE PLACED ALONG THE BACK OF CURB.

LEGEND

THESE LONGITUDINAL SLOPE RANGES SHALL BE THE STARTING POINT. IF SITE CONDITIONS WARRANT, LONGITUDINAL SLOPES UP TO 8.3% OR FLATTER ARE ALLOWED.

Ⓢ INDICATES PEDESTRIAN RAMP - SLOPE SHALL BE BETWEEN 5.0% MINIMUM AND 8.3% MAXIMUM IN THE DIRECTION SHOWN AND THE CROSS SLOPE SHALL NOT EXCEED 2.0%.

Ⓕ INDICATES PEDESTRIAN RAMP - SLOPE SHALL BE GREATER THAN 2.0% AND LESS THAN 5.0% IN THE DIRECTION SHOWN AND CROSS SLOPE SHALL NOT EXCEED 2.0%.

LANDING AREA - 4' X 4' MIN. (5' X 5' MIN. PREFERRED) DIMENSIONS AND MAX 2.0% SLOPE IN ALL DIRECTIONS. LANDING SHALL BE FULL WIDTH OF INCOMING PARS.

X" CURB HEIGHT

REVISION:

APPROVED: JANUARY 23, 2017

OPERATIONS ENGINEER

MINNESOTA DEPARTMENT OF TRANSPORTATION

STANDARD PLAN 5-297.250 | 2 OF 6

APPROVED: 1-23-2017
REVISED:

STATE DESIGN ENGINEER

PEDESTRIAN CURB RAMP DETAILS

STATE PROJ. NO. 0208-166 (T.H.65) SHEET NO. 11 OF 109 SHEETS

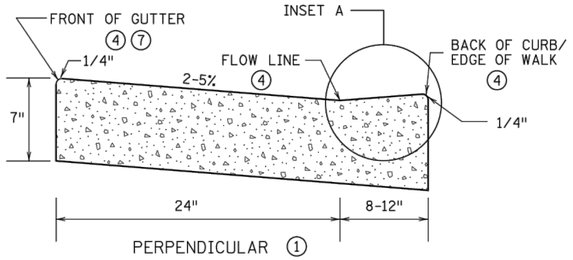

PERPENDICULAR 1

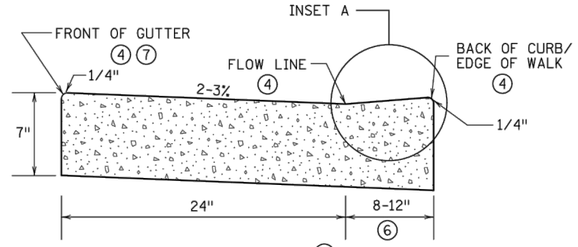

NON PERPENDICULAR 2

PEDESTRIAN ACCESS ROUTE CURB & GUTTER DETAIL

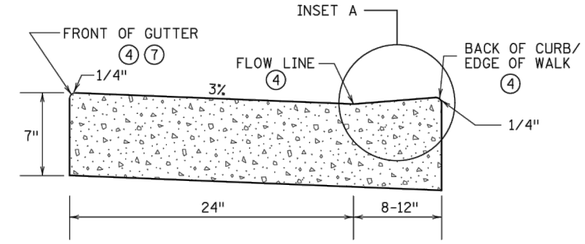

FOR CURB MACHINE PLACEMENT AROUND RADIUS 3

(REGARDLESS OF RAMP TYPE)

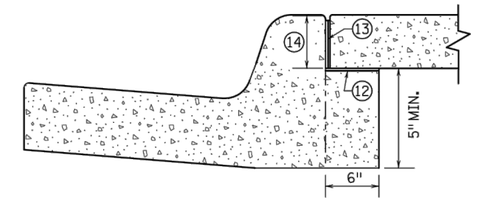

OPTIONAL SILL CURB WHEN SIDEWALK IS AT BACK OF CURB

CONCRETE SILL TO BE USED ONLY WHEN SPECIFIED IN THE PLAN.

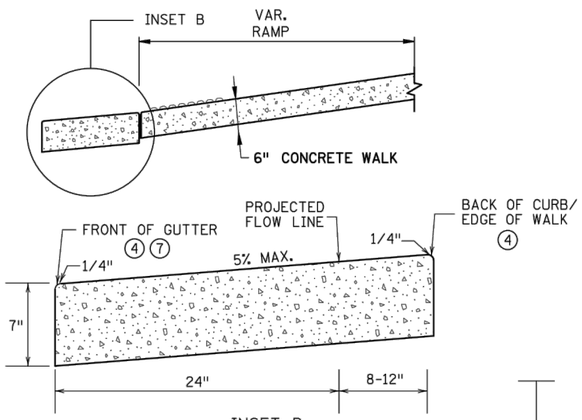

INSET B

OUTFLOW GUTTER 8

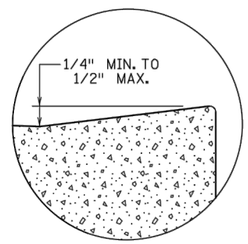

INSET A

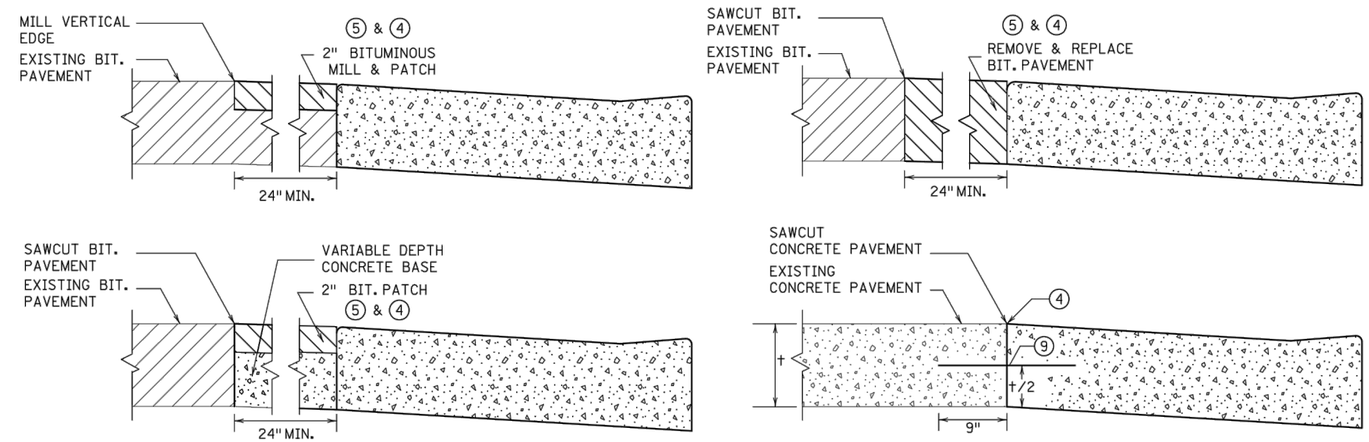

ONLY ALLOWED PER ENGINEER'S APPROVAL

PAVEMENT TREATMENT OPTIONS IN FRONT OF CURB & GUTTER

FOR USE ON CURB RAMP RETROFITS

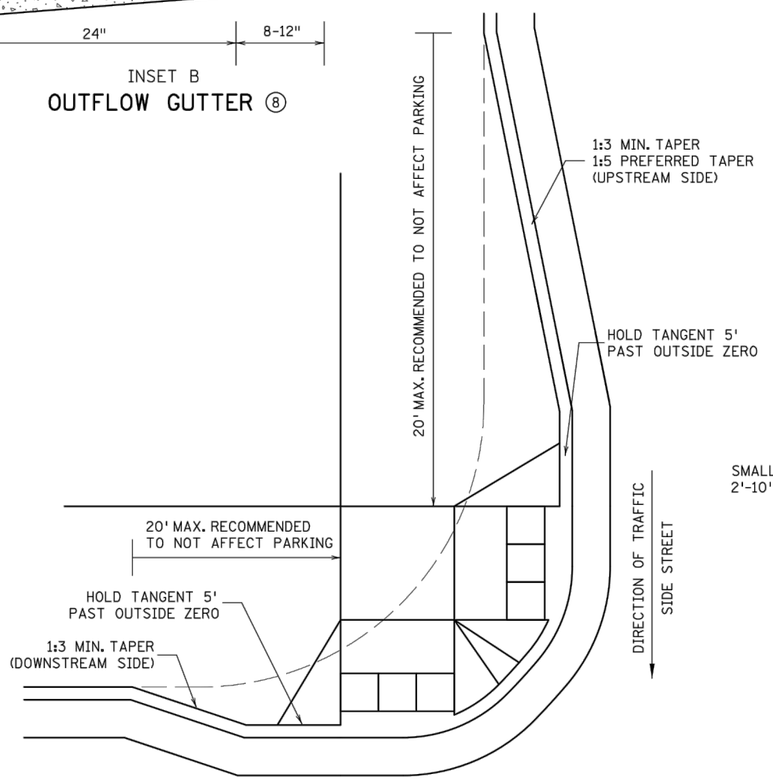

ADA CURB EXTENSION WITH COMPOUND RADIUS (BUMP OUT) 11

DIRECTION OF TRAFFIC

MAIN STREET

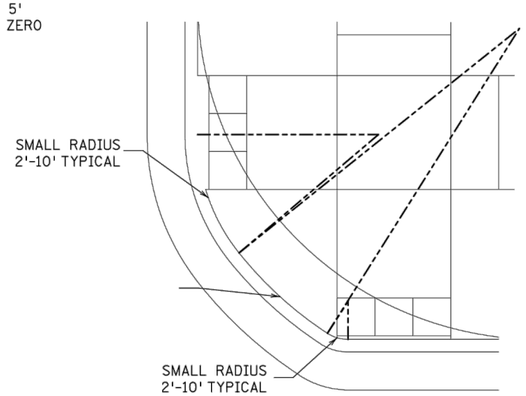

COMBINED DIRECTIONAL 10
(COMPOUND RADIUS)

NOTES:

POSITIVE FLOW LINE DRAINAGE SHALL BE MAINTAINED THROUGH THE PEDESTRIAN ACCESS ROUTE (PAR) AT A 2% MAXIMUM.

NO PONDING SHALL BE PRESENT IN THE PAR.

ANY VERTICAL LIP THAT OCCURS AT THE FLOW LINE SHALL NOT BE GREATER THAN 1/4 INCH.

1. FOR USE AT CURB CUTS WHERE THE PEDESTRIAN'S PATH OF TRAVEL IS ASSUMED PERPENDICULAR TO THE GUTTER FLOW LINE. RAMP TYPES INCLUDE: PERPENDICULAR, TIERED PERPENDICULAR, PARALLEL, AND DIAGONAL RAMPS.
2. FOR USE AT CURB RAMPS WHERE THE PEDESTRIAN'S PATH OF TRAVEL IS ASSUMED NON PERPENDICULAR TO THE GUTTER FLOW LINE. RAMP TYPES INCLUDE: FANS & DEPRESSED CORNERS.
3. BEGIN GUTTER SLOPE TRANSITION 10' OUTSIDE OF ALL CURB RAMPS.
4. THERE SHALL BE NO VERTICAL DISCONTINUITIES GREATER THAN 1/4".
5. ELEVATION CHANGE TAKES PLACE FROM THE EXISTING TO NEW FRONT OF GUTTER. PATCH IS USED TO MATCH THE NEW GUTTER FACE INTO THE EXISTING ROADWAY.
6. VARIABLE WIDTH FOR DIRECTIONAL CURB APPLICATIONS. SEE SHEET 2 FOR DIRECTIONAL CURB SLOPE REQUIREMENTS.
7. TOP FRONT OF GUTTER SHALL BE CONSTRUCTED FLUSH WITH PROPOSED ADJACENT PAVEMENT ELEVATION. TOP 1.5" OF THE GUTTER FACE MUST BE A FORMED EDGE. PAR GUTTER SHALL NOT BE OVERLAID.
8. SHOULD BE USED AT VERTICALLY CONSTRAINED AREAS WHEN AT A DRAINAGE HIGH POINT OR SUPER ELEVATED ROADWAY SEGMENTS.
9. DRILL AND GROUT NO. 4 EPOXY-COATED 18" LONG TIE BARS AT 30" CENTER TO CENTER INTO EXISTING CONCRETE PAVEMENT 1' MINIMUM FROM ALL JOINTS.
10. HELPS PROVIDE TWO SEPARATE RAMPS. REDUCES THE DOME SETBACK LENGTH AND MINIMIZES DIRECTIONAL CURB. THIS RADIUS DESIGN CLOSELY FOLLOWS THE TURNING VEHICLE PATH WHILE OPTIMIZING CURB RAMP LENGTH.
11. CURB EXTENSIONS SHOULD BE USED IN VERTICALLY CONSTRAINED AREAS, USUALLY IN DOWNTOWN ROADWAY SEGMENTS WHERE ON-STREET PARKING IS AVAILABLE. CURB EXTENSIONS SHOULD BE CONSIDERED FOR APS INTERSECTIONS WHERE SPACE IS LIMITED. PUSH BUTTONS MUST MEET APS CRITERIA AS DESCRIBED IN THE PUSH BUTTON LOCATION DETAIL SHEET.
12. PLACE BOND BREAKER BETWEEN WALK AND TOP OF SILL.
13. 1/2" PREFORMED JOINT FILLER PER MNDOT SPEC. 3702.
14. DIMENSION TO BE SAME AS SIDEWALK THICKNESS, 4" MIN.

REVISION:

APPROVED: JANUARY 23, 2017

OPERATIONS ENGINEER

MINNESOTA DEPARTMENT OF TRANSPORTATION

STANDARD PLAN 5-297.250 | 3 OF 6

APPROVED: 1-23-2017
REVISED:

STATE DESIGN ENGINEER

PEDESTRIAN CURB RAMP DETAILS

STATE PROJ. NO. 0208-166 (T.H.65) SHEET NO. 12 OF 109 SHEETS

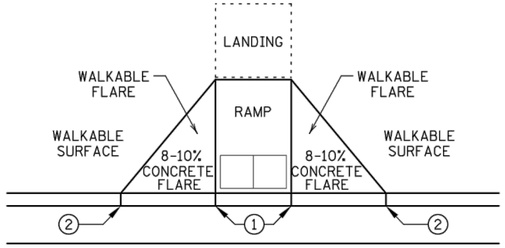

PAVED FLARES
ADJACENT TO WALKABLE SURFACE

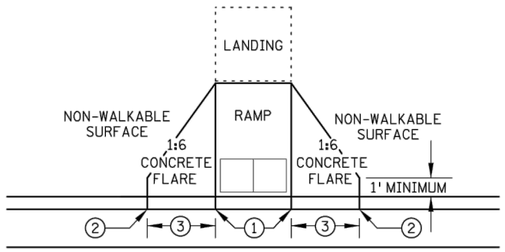

PAVED FLARES
ADJACENT TO NON-WALKABLE SURFACE

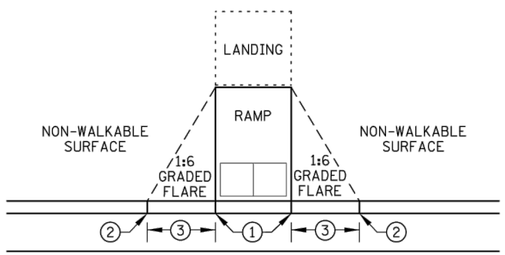

GRADED FLARES

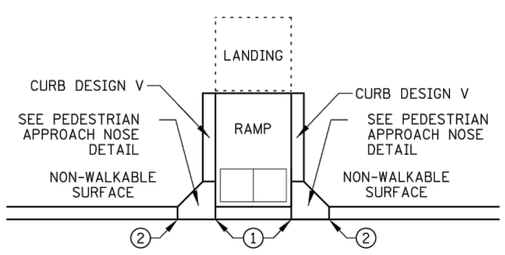

RETURNED CURB ⑤

TYPICAL SIDE TREATMENT OPTIONS ④ ⑪

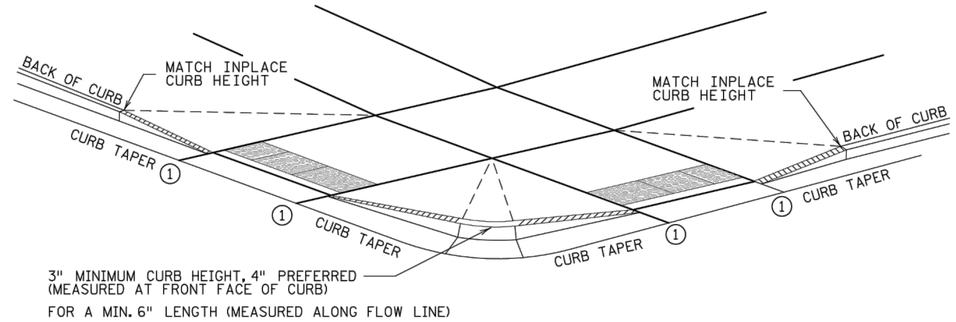

DETECTABLE EDGE WITH ⑧
CURB AND GUTTER

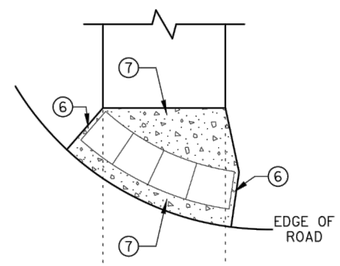

RADIAL DETECTABLE WARNING

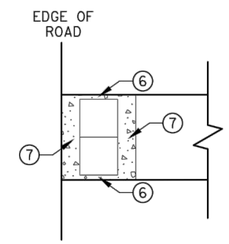

RECTANGULAR DETECTABLE WARNING

DETECTABLE EDGE WITHOUT CURB AND GUTTER

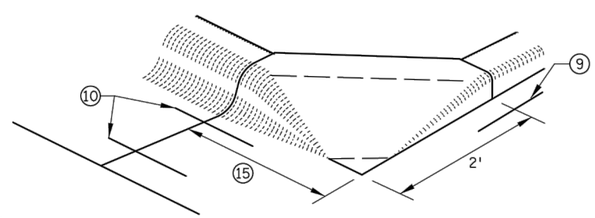

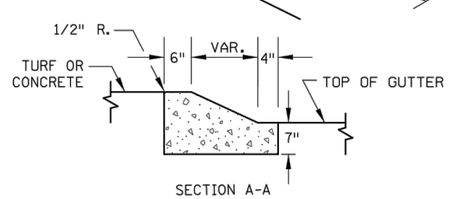

SECTION A-A

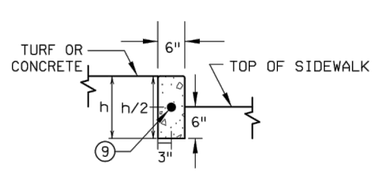

SECTION B-B

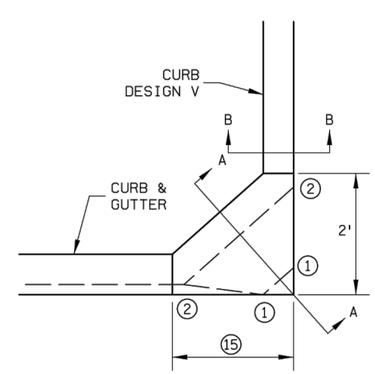

PEDESTRIAN APPROACH
NOSE DETAIL
(FOR RETURNED CURB
SIDE TREATMENT)

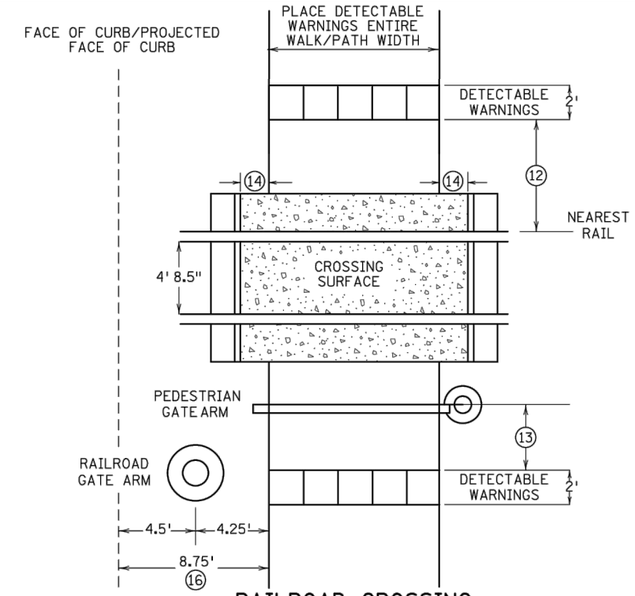

RAILROAD CROSSING
PLAN VIEW

NOTES:

SEE STANDARD PLATE 7038 AND THIS SHEET FOR ADDITIONAL DETAILS ON DETECTABLE WARNING.

A WALKABLE SURFACE IS DEFINED AS A PAVED SURFACE ADJACENT TO A CURB RAMP WITHOUT RAISED OBSTACLES THAT COULD MISTAKENLY BE TRAVERSED BY A USER WHO IS VISUALLY IMPAIRED.

CONCRETE FLARE LENGTHS ADJACENT TO NON-WALKABLE SURFACES SHOULD BE LESS THAN 8' LONG MEASURED ALONG THE RAMPS FROM THE BACK OF CURB.

① 0" CURB HEIGHT.

② FULL CURB HEIGHT.

③ 2' FOR 4" HIGH CURB AND 3' FOR 6" HIGH CURB.

④ SIDE TREATMENTS ARE APPLICABLE TO ALL RAMP TYPES AND SHOULD BE IMPLEMENTED AS NEEDED AS FIELD CONDITIONS DICTATE. THE ENGINEER SHALL DETERMINE THE RAMP SIDE TREATMENTS BASED ON MAINTENANCE OF BOTH ROADWAY AND SIDEWALK, ADJACENT PROPERTY CONSIDERATIONS, AND MITIGATING CONSTRUCTION IMPACTS.

⑤ TYPICALLY USED FOR MEDIANS AND ISLANDS.

⑥ WHEN NO CONCRETE FLARES ARE PROPOSED, THE CONCRETE WALK SHALL BE FORMED AND CONSTRUCTED PERPENDICULAR TO THE EDGE OF ROADWAY. MAINTAIN 3" MAX. BETWEEN EDGE OF DOMES AND EDGE OF CONCRETE.

⑦ IF NO CURB AND GUTTER IS PLACED IN RURAL SECTIONS, DETECTABLE WARNINGS SHALL BE PLACED 1' FROM THE EDGE OF BITUMINOUS ROADWAY AND/OR BITUMINOUS SHARED-USE PATH TO PROVIDE VISUAL CONTRAST.

⑧ ALL CONSTRUCTED CURBS MUST HAVE A CONTINUOUS DETECTABLE EDGE FOR THE VISUALLY IMPAIRED. THIS DETECTABLE EDGE REQUIRES DETECTABLE WARNINGS WHEREVER THERE IS ZERO-INCH HIGH CURB. CURB TAPERS ARE CONSIDERED A DETECTABLE EDGE WHEN THE TAPER STARTS WITHIN 3" OF THE EDGE OF THE DETECTABLE WARNINGS AND UNIFORMLY RISES TO A 3-INCH MINIMUM CURB HEIGHT. ANY CURB NOT PART OF A CURB TAPER AND LESS THAN 3 INCHES IN HEIGHT IS NOT CONSIDERED A DETECTABLE EDGE AND THEREFORE IS NOT COMPLIANT WITH ACCESSIBILITY STANDARDS.

⑨ DRILL AND GROUT 1 - NO. 4 12" LONG REINFORCEMENT BAR (EPOXY COATED) WITH 3" MIN. COVER. REINFORCEMENT BARS ARE NOT NEEDED IF THE APPROACH NOSE IS POURED INTEGRAL WITH THE V CURB.

⑩ DRILL AND GROUT 2 - NO. 4 12" LONG REINFORCEMENT BARS (EPOXY COATED) WITH 3" MIN. COVER. REINFORCEMENT BARS ARE NOT NEEDED IF THE APPROACH NOSE IS POURED INTEGRAL WITH THE CURB AND GUTTER.

⑪ SIDE TREATMENT EXAMPLES SHOWN ARE WHEN THE INITIAL LANDING IS APPROXIMATELY LEVEL WITH THE FULL HEIGHT CURB (I.E. 6' LONG RAMP FOR 6" HIGH CURB). WHEN THE INITIAL LANDING IS MORE THAN 1" BELOW FULL HEIGHT CURB REFER TO SHEETS 1 & 2 TO MODIFY THE CURB HEIGHT TAPERS AND MAINTAIN POSITIVE BOULEVARD DRAINAGE.

⑫ NEAREST EDGE OF DETECTABLE WARNING SURFACES SHALL BE PLACED 12' MINIMUM TO 15' MAXIMUM FROM THE NEAREST RAIL. FOR SKEWED RAILWAYS IN NO INSTANCE SHALL THE DETECTABLE WARNING BE CLOSER THAN 12' MEASURED PERPENDICULAR TO THE NEAREST RAIL.

⑬ WHEN PEDESTRIAN GATES ARE PROVIDED, DETECTABLE WARNING SURFACES SHALL BE PLACED ON THE SIDE OF THE GATES OPPOSITE THE RAIL, 2' FROM THE APPROACHING SIDE OF THE GATE ARM. THIS CRITERIA GOVERNS OVER NOTE ⑫.

⑭ CROSSING SURFACE SHALL EXTEND 2' MINIMUM PAST THE OUTSIDE EDGE OF WALK OR SHARED-USE PATH.

⑮ 3' FOR MEDIANS AND SPLITTER ISLANDS. NOSE CAN BE REDUCED TO 2' ON FREE RIGHT ISLANDS.

⑯ SIDEWALK TO BE PLACED 8.75' MIN. FROM THE FACE OF CURB/PROJECTED FACE OF CURB. THIS ENSURES MIN. CLEARANCE BETWEEN THE SIDEWALK AND GATE ARM COUNTERWEIGHT SUPPORTS.

REVISION:
APPROVED: JANUARY 23, 2017
OPERATIONS ENGINEER

MINNESOTA DEPARTMENT OF TRANSPORTATION

STANDARD PLAN 5-297.250 | 4 OF 6

APPROVED: 1-23-2017
REVISED:

STATE DESIGN ENGINEER

PEDESTRIAN CURB RAMP DETAILS

STATE PROJ. NO. 0208-166 (T.H.65) SHEET NO. 13 OF 109 SHEETS

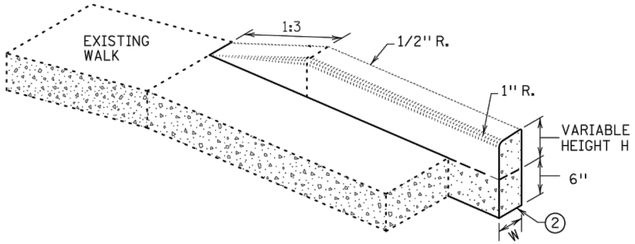

V CURB ADJACENT TO LANDSCAPE

CURB WITHIN SIDEWALK LIMITS

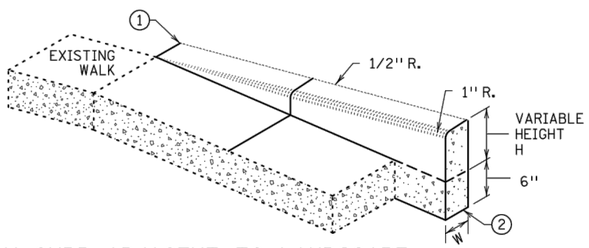

V CURB ADJACENT TO LANDSCAPE

CURB OUTSIDE SIDEWALK LIMITS

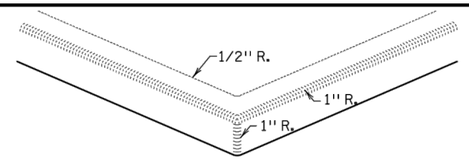

V CURB INTERSECTION

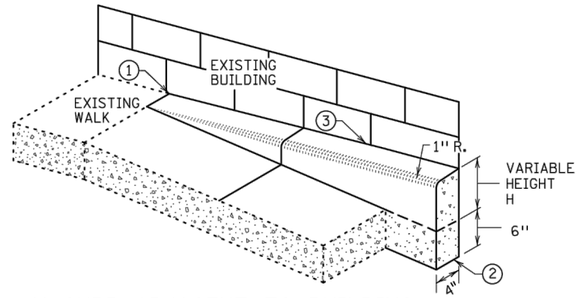

V CURB ADJACENT TO BUILDING OR BARRIER

CONCRETE CURB DESIGN V	
CURB HEIGHT H	CURB WIDTH W
<6"	4"
≥6"	6"

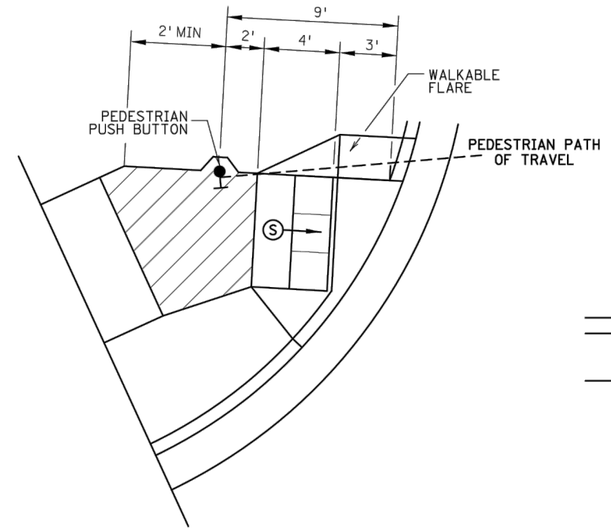

SEMI-DIRECTIONAL RAMP (3,4,9)

3' DOME SETBACK, 4' LONG RAMP AND PUSH BUTTON 9' FROM THE BACK OF CURB

PRIMARILY USED FOR APS APPLICATIONS WHERE THE PAR DOES NOT CONTINUE PAST THE PUSH BUTTON (DEAD-END SIDEWALK)

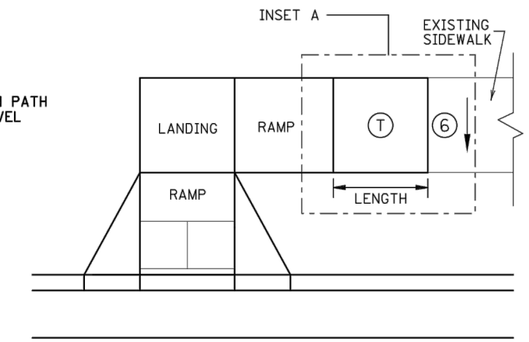

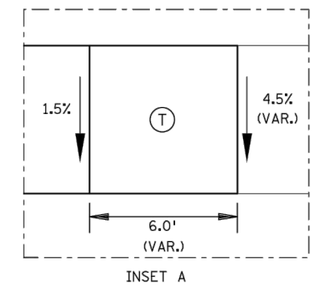

TRANSITION PANEL ④⑤

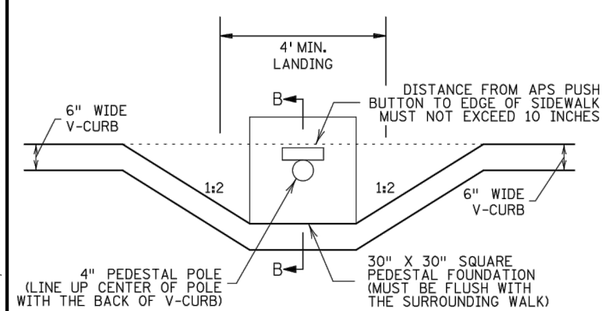

PLAN VIEW

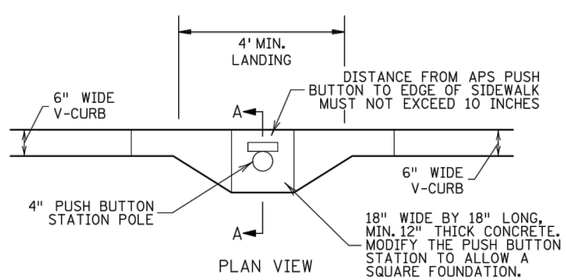

PLAN VIEW

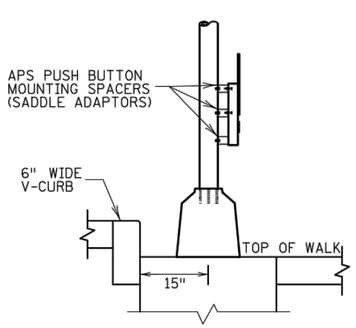

SECTION B-B

SIGNAL PEDESTAL & PUSH BUTTON (V-CURB)

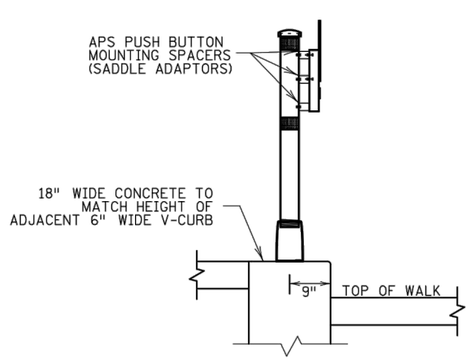

SECTION A-A

PUSH BUTTON STATION (V-CURB)

NOTES:

A WALKABLE FLARE IS AN 8-10% CONCRETE FLARE THAT IS REQUIRED WHEN THE FLARE IS ADJACENT TO A WALKABLE SURFACE, OR WHEN THE PEDESTRIAN PATH OF TRAVEL OF A PUSH BUTTON TRAVERSES THE FLARE.

ALL V CURB CONTRACTION JOINTS SHALL MATCH CONCRETE WALK JOINTS.

WHERE RIGHT-OF-WAY ALLOWS, USE OF V CURB SHOULD BE MINIMIZED. GRADING ADJACENT TURF OR SLOPING ADJACENT PAVEMENT IS PREFERRED.

V CURB SHALL BE PLACED OUTSIDE THE SIDEWALK LIMITS WHEN RIGHT OF WAY ALLOWS.

V CURB NEXT TO BUILDING SHALL BE A 4" WIDTH AND SHALL MATCH PREVIOUS TOP OF SIDEWALK ELEVATIONS.

1. END TAPERS AT TRANSITION SECTION SHALL MATCH INPLACE SIDEWALK GRADES.
2. ALL V CURB SHALL MATCH BOTTOM OF ADJACENT WALK.
3. EDGE BETWEEN NEW V CURB AND INPLACE STRUCTURE SHALL BE SEALED AND BOND BREAKER SHALL BE USED BETWEEN EXISTING STRUCTURE AND PLACED V-CURB.
4. THE MAX. RATE OF CROSS SLOPE TRANSITIONING IS 1' LINEAR FOOT OF SIDEWALK PER HALF PERCENT CROSS SLOPE. WHEN PAR WIDTH IS GREATER THAN 6' OR THE RUNNING SLOPE IS GREATER THAN 5%, DOUBLE THE CALCULATED TRANSITION LENGTH.
5. TRANSITION PANELS ARE TO ONLY BE USED AFTER THE RAMP, OR IF NEEDED, LANDING ARE AT THE FULL CURB HEIGHT (TYPICAL SECTION).
6. EXISTING CROSS SLOPE GREATER THAN 2.0%.

LEGEND

THESE LONGITUDINAL SLOPE RANGES SHALL BE THE STARTING POINT. IF SITE CONDITIONS WARRANT, LONGITUDINAL SLOPES UP TO 8.3% OR FLATTER ARE ALLOWED.

- (S) INDICATES PEDESTRIAN RAMP - SLOPE SHALL BE BETWEEN 5.0% MINIMUM AND 8.3% MAXIMUM IN THE DIRECTION SHOWN AND THE CROSS SLOPE SHALL NOT EXCEED 2.0%.
- LANDING AREA - 4' X 4' MIN. (5' X 5' MIN. PREFERRED) DIMENSIONS AND MAX 2.0% SLOPE IN ALL DIRECTIONS. LANDING SHALL BE FULL WIDTH OF INCOMING PARS.
- (T) TRANSITION PANEL(S) - TO BE USED FOR TRANSITIONING THE CROSS-SLOPE OF A RAMP TO THE EXISTING WALK CROSS-SLOPE. RATE OF TRANSITION SHOULD BE 0.5% PER 1 LINEAR FOOT OF WALK. SEE THIS SHEET FOR ADDITIONAL INFORMATION.

REVISION:

APPROVED: JANUARY 23, 2017

OPERATIONS ENGINEER

MINNESOTA DEPARTMENT OF TRANSPORTATION

STANDARD PLAN 5-297.250 | 5 OF 6

APPROVED: 1-23-2017
REVISED:

STATE DESIGN ENGINEER

PEDESTRIAN CURB RAMP DETAILS

STATE PROJ. NO. 0208-166 (T.H.65) SHEET NO. 14 OF 109 SHEETS

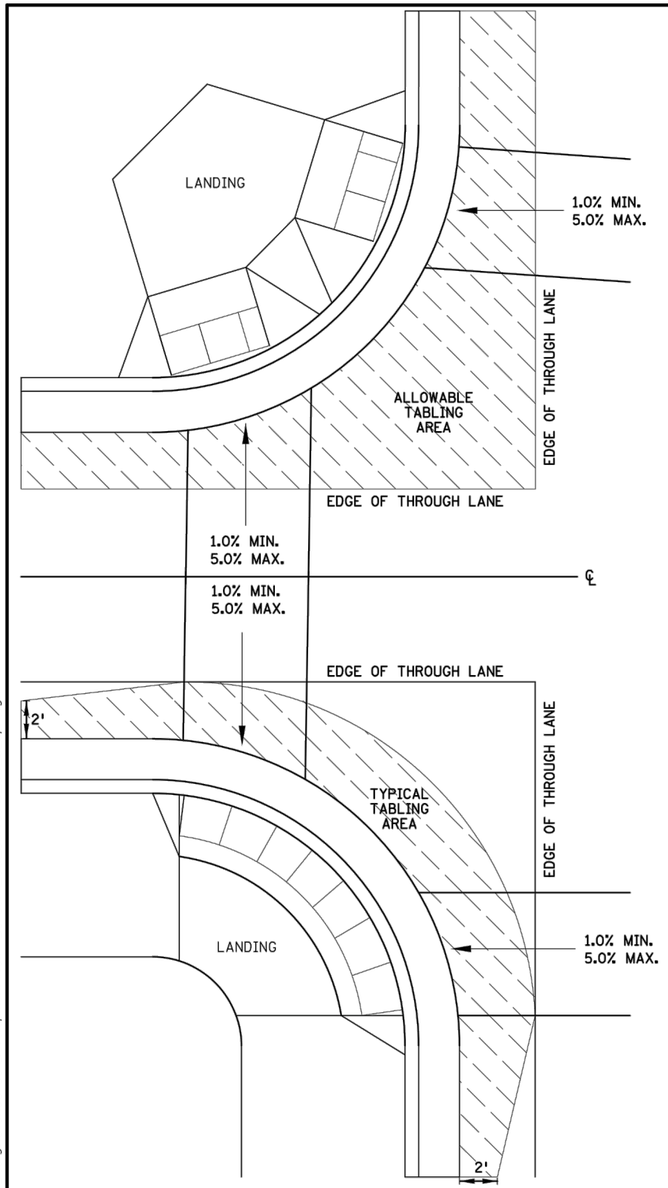

CURB LINE AND ROAD CROSSING ADJUSTMENTS

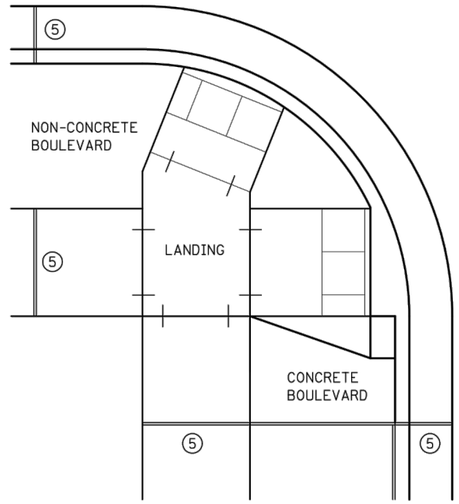

EXPANSION MATERIAL PLACEMENT FOR CONCRETE AND BITUMINOUS ROADWAYS

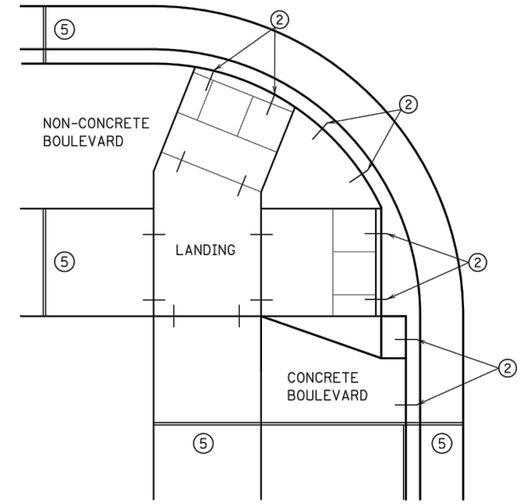

OPTIONAL CURB LINE REINFORCEMENT PLACEMENT ON BITUMINOUS ROADWAYS ④

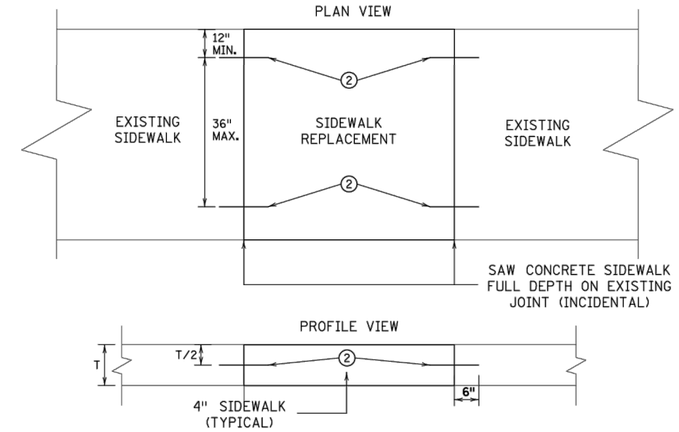

OPTIONAL SIDEWALK REINFORCEMENT

SIDEWALK REINFORCEMENT TO BE USED ONLY WHEN SPECIFIED IN THE PLAN.

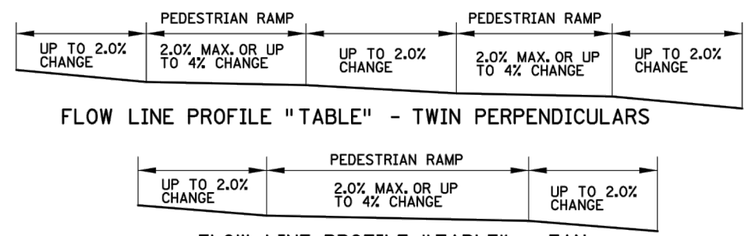

FLOW LINE PROFILE "TABLE" - TWIN PERPENDICULARS

FLOW LINE PROFILE "TABLE" - FAN

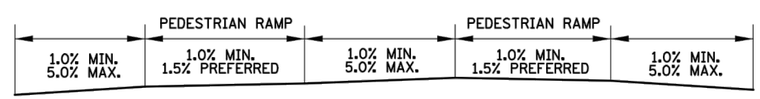

FLOW LINE PROFILE RAISE - TWIN PERPENDICULARS

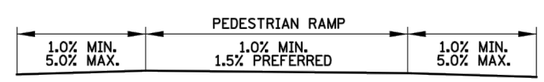

FLOW LINE PROFILE RAISE - FAN

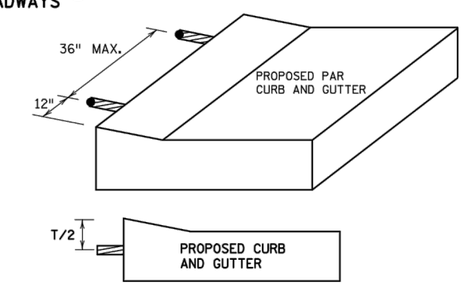

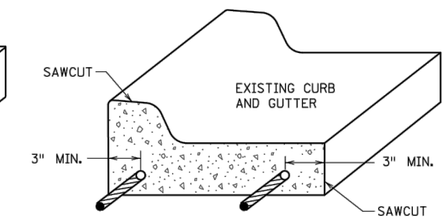

FOR USE ON CURB RAMP RETROFITS

CURB AND GUTTER REINFORCEMENT ③

OPTIONAL CURB LINE REINFORCEMENT DETAILS ②④

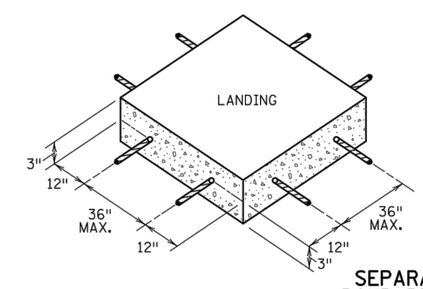

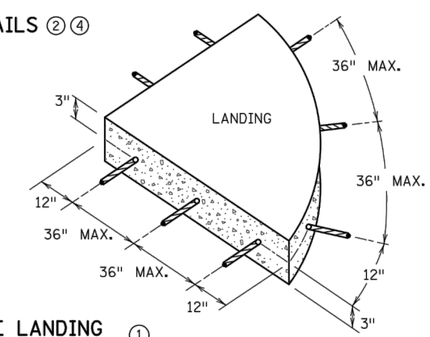

SEPARATE LANDING POUR REINFORCEMENT ①

"TABLING" OF CROSSWALKS MEANS MAINTAINING LESS THAN 2% CROSS SLOPE WITHIN A CROSSWALK, IS REQUIRED WHEN A ROADWAY IS IN A STOP OR YIELD CONDITION AND THE PROJECT SCOPE ALLOWS.

RECONSTRUCTION PROJECTS: ON FULL PAVEMENT REPLACEMENT PROJECTS "TABLING" OF ENTIRE CROSSWALK SHALL OCCUR WHEN FEASIBLE.

MILL & OVERLAY PROJECTS: "TABLING" OF FLOW LINES, IN FRONT OF THE PEDESTRIAN RAMP, IS REQUIRED WHEN THE EXISTING FLOW LINE IS GREATER THAN 2%. WARPING OF THE BITUMINOUS PAVEMENT CAN NOT EXTEND INTO THE THROUGH LANE. TABLE THE FLOW LINE TO 2% OR AS MUCH AS POSSIBLE WHILE ADHERING TO THE FOLLOWING CRITERIA;

1) 1.0% MIN. CROSS-SLOPE OF THE ROAD
2) 5.0% MAX. CROSS-SLOPE OF THE ROAD
3) "TABLE" FLOW LINE UP TO 4% CHANGE FROM EXISTING SLOPE IN FRONT OF PEDESTRIAN RAMP
4) UP TO 2% CHANGE IN FLOW LINE FROM EXISTING SLOPE BEYOND THE PEDESTRIAN CURB RAMP

STAND-ALONE ADA RETROFITS: FOLLOW MILL & OVERLAY CRITERIA ABOVE HOWEVER ALL PAVEMENT WARPING IS DONE WITH BITUMINOUS PATCHING ON BITUMINOUS ROADWAYS AND FULL-DEPTH APRON REPLACEMENT ON CONCRETE ROADWAYS.

RAISING OF CURB LINES SHOULD OCCUR IN VERTICALLY CONSTRAINED AREAS. RAISE THE CURB LINES ENOUGH TO ALLOW COMPLIANT RAMPS OR AS MUCH AS POSSIBLE WHILE ADHERING TO THE FOLLOWING CRITERIA;

1) 1.0% MIN. AND 5.0% MAXIMUM CROSS-SLOPE OF THE ROAD
2) 1.0% MIN. FLOW LINE (ON EITHER SIDE OF PEDESTRIAN RAMP) TO MAINTAIN POSITIVE DRAINAGE
3) 5.0% RECOMMENDED MAX. FLOW LINE
4) LONGITUDINAL THROUGH LANE ROADWAY TAPERS SHOULD BE 1" VERTICAL PER 15' HORIZONTAL

NOTES:

① TO ENSURE RAMPS AND LANDINGS ARE PROPERLY CONSTRUCTED, ALL INITIAL LANDINGS AT A TOP OF A RAMPED SURFACE (RUNNING SLOPE GREATER THAN 2%) SHALL BE FORMED AND PLACED SEPARATELY IN AN INDEPENDENT CONCRETE POUR. FOLLOW SIDEWALK REINFORCEMENT DETAILS ON THIS SHEET FOR ALL SEPARATELY POURED INITIAL LANDINGS.

② DRILL AND GROUT NO. 4 12" LONG REINFORCEMENT BARS AT 36" MAXIMUM CENTER TO CENTER (EPOXY COATED). BARS TO BE ADJUSTED TO MATCH RAMP GRADE.

③ DRILL AND GROUT 2 - NO. 4 X 12" LONG REINFORCEMENT BARS (EPOXY COATED). REINFORCEMENT REQUIRED FOR ALL CONSTRUCTION JOINTS WITHIN RADIUS.

④ THIS OPTIONAL CURB LINE REINFORCEMENT DETAIL SHOULD ONLY BE USED ON BITUMINOUS ROADWAYS WHEN SPECIFIED IN THE PLAN.

⑤ 1/2 IN. PREFORMED JOINT FILLER MATERIAL PER MNDOT SPEC. 3702.

REVISION:

APPROVED: JANUARY 23, 2017

OPERATIONS ENGINEER

MINNESOTA DEPARTMENT OF TRANSPORTATION

STANDARD PLAN 5-297.250 | 6 OF 6

APPROVED: 1-23-2017
REVISED:

STATE DESIGN ENGINEER

PEDESTRIAN CURB RAMP DETAILS

STATE PROJ. NO. 0208-166 (T.H.65) SHEET NO. 15 OF 109 SHEETS

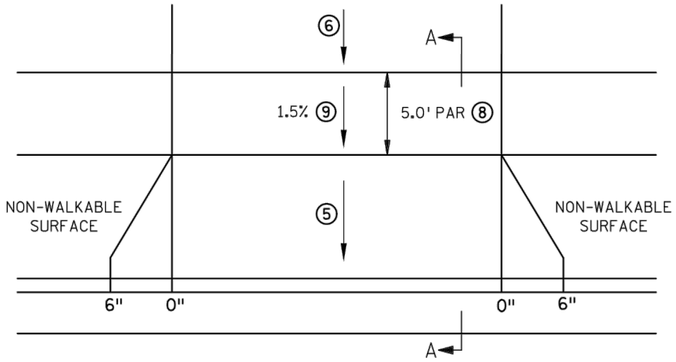

PERPENDICULAR DRIVEWAY ①

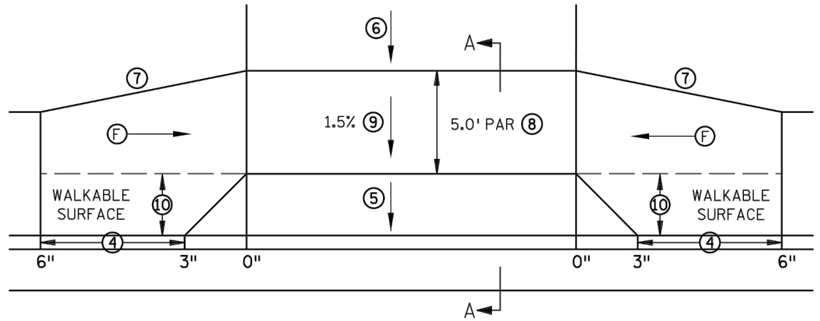

TIERED PERPENDICULAR OFFSET DRIVEWAY

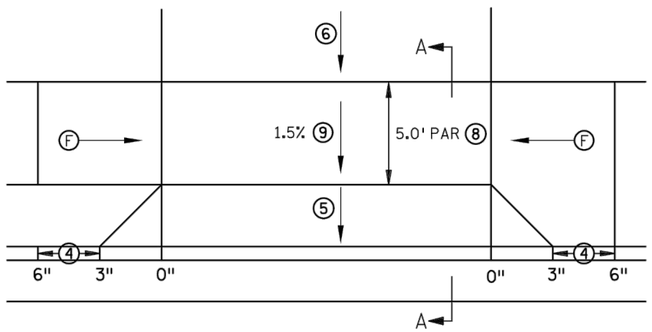

TIERED PERPENDICULAR DRIVEWAY ②

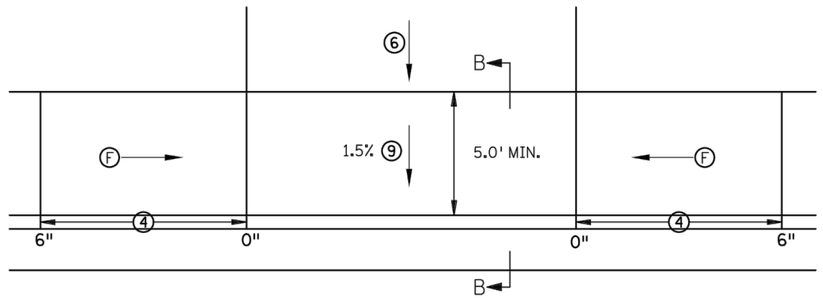

PARALLEL DRIVEWAY ③

NOTES:

IN NO CASE SHALL SIDEWALK PROFILES EXCEED 5.0%, EXCEPT SIDEWALK PROFILES CAN MATCH ROADWAY GRADE IF ROADWAY GRADE IS GREATER THAN 5.0%. RAMPS FOR DRIVEWAYS ARE REQUIRED TO FOLLOW THE ABOVE SIDEWALK CRITERIA.

CONTRACTION JOINTS SHALL BE CONSTRUCTED ALONG ALL GRADE BREAKS WITHIN THE PEDESTRIAN ACCESS ROUTE (PAR). 1/4" DEEP VISUAL JOINTS SHALL BE USED AT THE TOPS OF CONCRETE FLARES ADJACENT TO WALKABLE SURFACES.

DRIVEWAY TYPES FROM MOST PREFERRED TO LEAST PREFERRED ARE AS FOLLOWS: PERPENDICULAR, TIERED PERPENDICULAR, TIERED PERPENDICULAR OFFSET & PARALLEL.

① TO BE USED WHEN THE DRIVEWAY PAR IS LEVEL WITH OR ABOVE THE TOP OF CURB, RESULTING IN A CONTINUOUS PAR PROFILE.

② TO BE USED WHEN THE DRIVEWAY PAR IS BELOW THE ROADWAY CURB HEIGHT. THIS DRIVEWAY TYPE CAN BE USED FOR BOTH PAVED (AS SHOWN) AND GRASS BOULEVARDS.

③ SHOULD BE USED FOR NEGATIVE SLOPED DRIVEWAYS. DW CURB TYPE 2 CURB SHOULD BE USED TO RAISE PAR ABOVE GUTTER AND REDUCE "ROLLER COASTER" EFFECT. 4" HIGH ROADWAY CURB SHOULD BE USED TO REDUCE "ROLLER COASTER" EFFECT ESPECIALLY WHEN MULTIPLE DRIVEWAYS ARE PRESENT.

④ TOP OF CURB SHALL MATCH PROPOSED ADJACENT WALK GRADE.

⑤ 8% MAX. PREFERRED, 10% MAX. FOR COMMERCIAL AND 12% MAX. FOR RESIDENTIAL. SEE GENERAL NOTES ON SHEET 2 FOR MORE INFORMATION.

⑥ 8% MAX. PREFERRED, SEE SHEET 2 FOR MORE INFORMATION.

⑦ 1:3 MIN. 1:5 PREFERRED FOR DRIVEWAY RETROFIT PROJECTS. 1:10 PREFERRED FOR SIDEWALK REPLACEMENT PROJECTS.

⑧ 5.0' MIN. PAR WIDTH IS THE STANDARD THROUGH DRIVEWAYS. IF FEASIBLE WIDEN DRIVEWAY PAR WIDTH TO MATCH APPROACHING SIDEWALK PAR WIDTHS. IN VERTICALLY CONSTRAINED AREAS PAR WIDTHS CAN INCREMENTALLY BE REDUCED TO 4.5' OR 4' MIN AFTER ALL OTHER OPTIONS HAVE BEEN APPLIED.

⑨ THE PEDESTRIAN ACCESS ROUTE, MAY NOT EXCEED 0.02 FT./FT. AS CONSTRUCTED.

⑩ SIDEWALK OFFSET TO BE LESS THAN OR EQUAL TO HALF THE APPROACHING SIDEWALK WIDTH.

⑪ VALLEY GUTTER APRON TO BE POURED INTEGRAL WITH THE CURB AND GUTTER. SEE SHEET 2 FOR MORE INFORMATION.

⑫ SEE SHEET 2 FOR CURB TYPE INFORMATION.

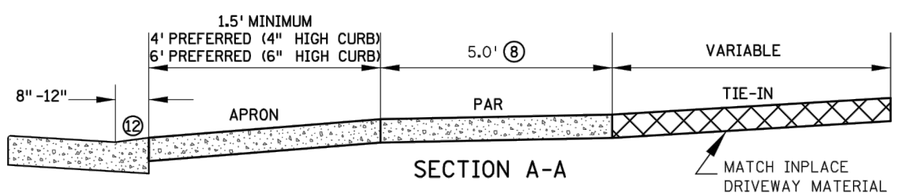

SECTION A-A

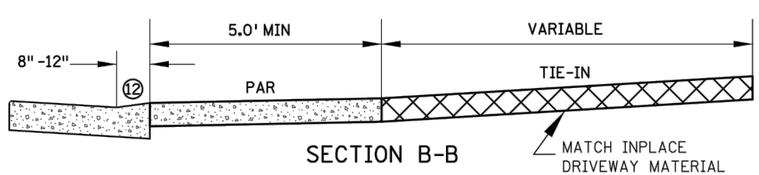

SECTION B-B

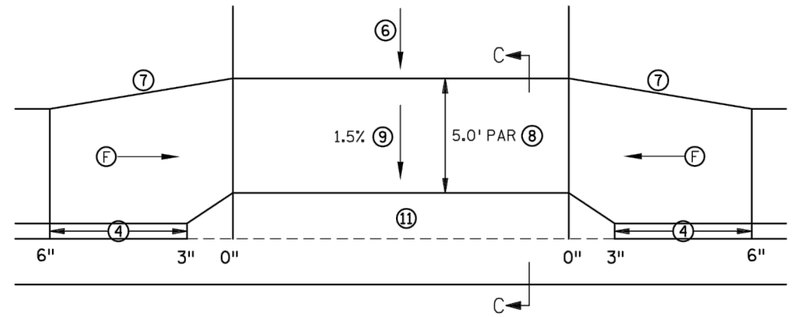

VALLEY GUTTER DRIVEWAY

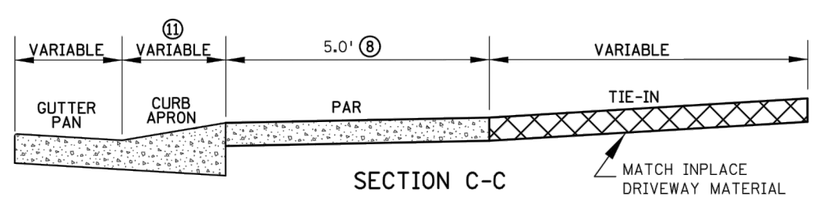

SECTION C-C

LEGEND	
Ⓕ ↓	INDICATES DRIVEWAY RAMP - SLOPE SHALL BE GREATER THAN 2.0% AND LESS THAN 5.0% IN THE DIRECTION SHOWN AND CROSS SLOPE SHALL NOT EXCEED 2.0%
X"	CURB HEIGHT (INCHES)

REVISION:

APPROVED: JANUARY 23, 2017

OPERATIONS ENGINEER

MINNESOTA DEPARTMENT OF TRANSPORTATION

STANDARD PLAN 5-297.254 | 1 OF 4

APPROVED: 1-23-2017
REVISED:

STATE DESIGN ENGINEER

DRIVEWAY AND SIDEWALK DETAILS

STATE PROJ. NO. 0208-166 (T.H.65) SHEET NO. 16 OF 109 SHEETS

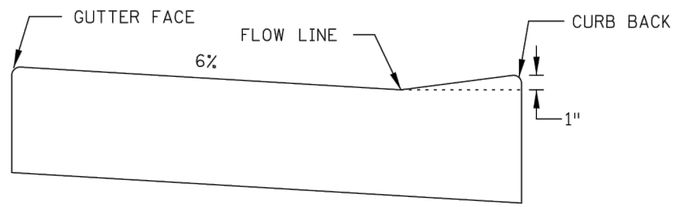

DW CURB STANDARD

STANDARD CURB AT DRIVEWAY

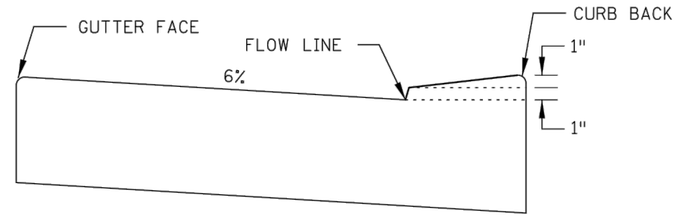

DW CURB TYPE 2

VERTICALLY CONSTRAINED

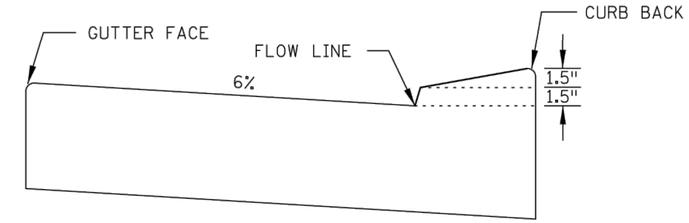

DW CURB TYPE 3

VERTICALLY CONSTRAINED

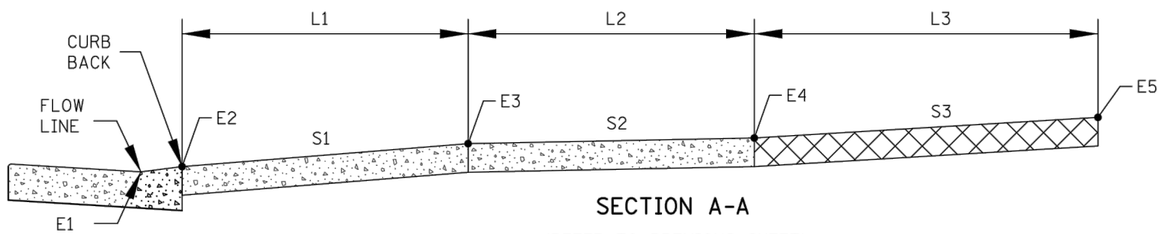

SECTION A-A

(REFER TO PREVIOUS SHEET)

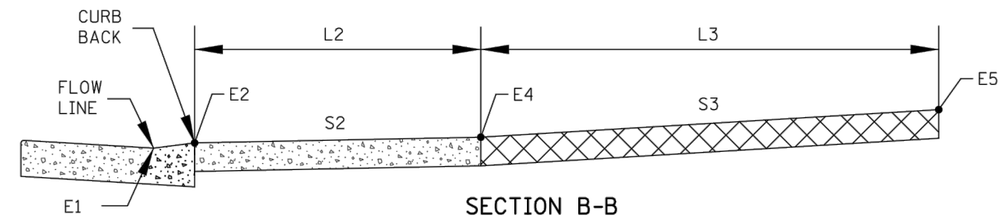

SECTION B-B

(REFER TO PREVIOUS SHEET)

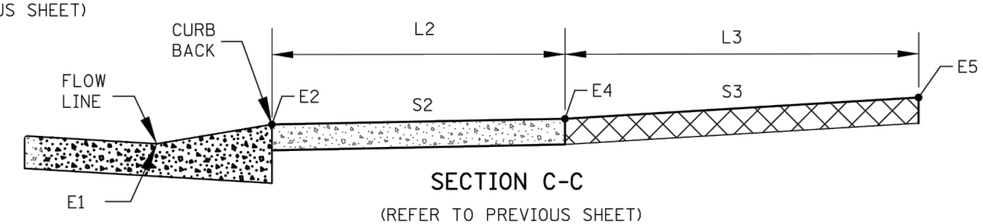

SECTION C-C

(REFER TO PREVIOUS SHEET)

DRIVEWAY TABULATION ①

STATION	SIDE	DRIVEWAY TYPE	CURB TYPE ③	E1	E2	L1 FT	S1 %	E3	L2 FT	S2 ② %	E4	L3 FT	S3 %	EXISTING %	E5	COMMENTS

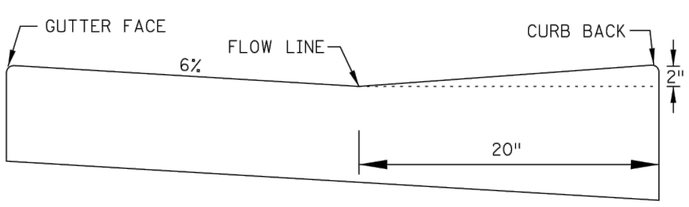

VG 220

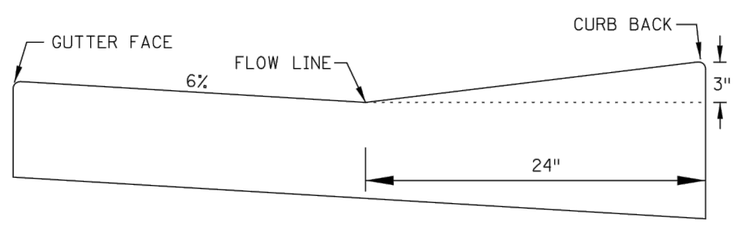

VG 324

VALLEY GUTTER CURB

OTHER CURB HEIGHTS & CURB APRON LENGTHS CAN BE USED

NOTES:

DW CURB STANDARD SHALL BE USED WHEN THE DRIVEWAY ACTS AS A PEDESTRIAN RAMP. THE MAX. APRON SLOPE MUST ADHERE TO ADA CRITERIA AS WELL. DW CURB STANDARD SHOULD BE USED IF THERE IS ON STREET PARKING.

WHERE ROADWAY DRAINAGE IS A CONCERN (NEGATIVE SLOPED APRON) DW CURB TYPE 2 CAN BE USED TO HELP KEEP THE WATER ON PUBLIC RIGHT OF WAY.

S1 8% MAX PREFERRED, 10% MAX. COMMERCIAL AND 12% MAX. RESIDENTIAL. IF EXISTING GRADES ARE STEEPER DO NOT MAKE GRADES APPRECIABLY WORSE BY USING BEST PRACTICES SUCH AS DRIVEWAY CURB HEIGHTS, EXTENDING L3 AND/ OR STEEPEN S3.

DW CURB TYPE 3 SHALL ONLY BE USED IN EXTREME TIE-IN CASES.

S3 8% MAX PREFERRED, IF THIS SLOPE IS EXCEEDED OR IS CONTINUED FOR MORE THAN 5' ANALYZE THE NEED FOR VERTICAL CURVE(S). SEE ROAD DESIGN MANUAL, CHAPTER 5, FOR GEOMETRIC DESIGNS OF DRIVEWAYS.

① EXAMPLE SHOWN TO BE INCLUDED IN PLAN FOR EACH DRIVEWAY.

② SHOULD BE DESIGNED AT 1.5%.

③ DW CURB STANDARD SHALL BE THE STARTING POINT FOR ALL PERPENDICULAR AND TIERED DRIVEWAYS. DW CURB TYPES 2 AND 3 SHALL ONLY BE USED AFTER UTILIZING BEST PRACTICES SUCH AS MAXIMIZING S1, S3, AND L3.

REVISION:

APPROVED: JANUARY 23, 2017

OPERATIONS ENGINEER

MINNESOTA DEPARTMENT OF TRANSPORTATION

STANDARD PLAN 5-297.254 | 2 OF 4

APPROVED: 1-23-2017
REVISED:

STATE DESIGN ENGINEER

DRIVEWAY AND SIDEWALK DETAILS

STATE PROJ. NO. 0208-166 (T.H.65) SHEET NO. 17 OF 109 SHEETS

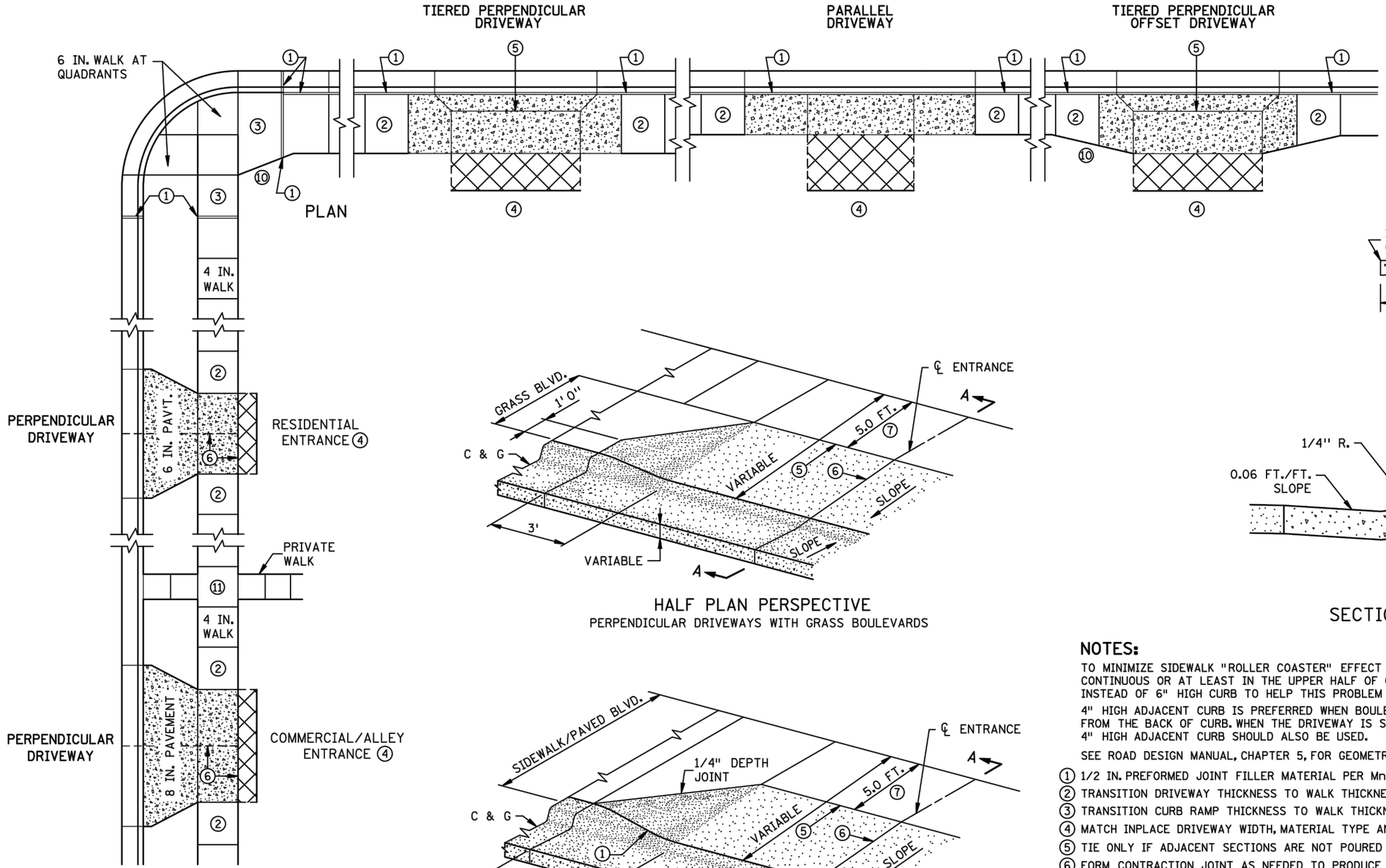

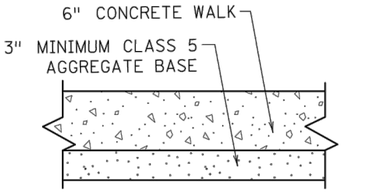

SECTION THRU CURB RAMP

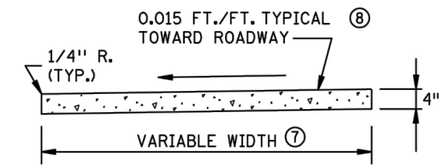

SECTION THRU WALK

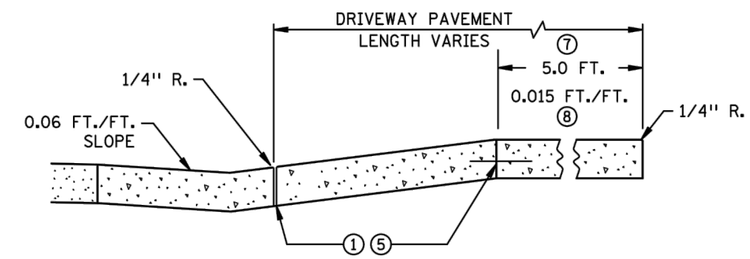

SECTION A-A

SECTION THRU DRIVEWAY

NOTES:

TO MINIMIZE SIDEWALK "ROLLER COASTER" EFFECT IT IS DESIRABLE TO KEEP THE PAR ELEVATION CONTINUOUS OR AT LEAST IN THE UPPER HALF OF CURB HEIGHT. 4" HIGH CURB SHOULD BE USED INSTEAD OF 6" HIGH CURB TO HELP THIS PROBLEM WHEN APPLICABLE.

4" HIGH ADJACENT CURB IS PREFERRED WHEN BOULEVARDS 4' OR LESS ARE PRESENT MEASURED FROM THE BACK OF CURB. WHEN THE DRIVEWAY IS SLOPING DOWN FROM THE ROADWAY (NEGATIVE) 4" HIGH ADJACENT CURB SHOULD ALSO BE USED.

SEE ROAD DESIGN MANUAL, CHAPTER 5, FOR GEOMETRIC DESIGN OF DRIVEWAYS.

① 1/2 IN. PREFORMED JOINT FILLER MATERIAL PER MnDOT SPEC. 3702, EXCEPT AT GRASS BOULEVARDS.
② TRANSITION DRIVEWAY THICKNESS TO WALK THICKNESS.
③ TRANSITION CURB RAMP THICKNESS TO WALK THICKNESS.
④ MATCH INPLACE DRIVEWAY WIDTH, MATERIAL TYPE AND THICKNESS.
⑤ TIE ONLY IF ADJACENT SECTIONS ARE NOT POURED MONOLITHICALLY. SEE SECTION A-A.
⑥ FORM CONTRACTION JOINT AS NEEDED TO PRODUCE APPROXIMATELY SQUARE PANELS (MAXIMUM WIDTH 15 FT. BETWEEN JOINTS).
⑦ 5.0' MIN. PAR WIDTH IS THE STANDARD THROUGH DRIVEWAYS. IF FEASIBLE WIDEN DRIVEWAY PAR WIDTH TO MATCH APPROACHING SIDEWALK PAR WIDTHS. IN VERTICALLY CONSTRAINED AREAS PAR WIDTHS CAN INCREMENTALLY BE REDUCED TO 4.5' OR 4' MIN AFTER ALL OTHER OPTIONS HAVE BEEN APPLIED.
⑧ THE PEDESTRIAN ACCESS ROUTE CROSS-SLOPE, SHALL NOT EXCEED 0.02 FT./FT. AS CONSTRUCTED.
⑨ 8% TO 10% FLARES SHALL BE USED WHEN ADJACENT TO WALKABLE SURFACES AND FOR ALL TIERED DRIVEWAYS WITH GRASS BOULEVARDS.
⑩ 1:10 MIN. SIDEWALK OFFSET TAPER REQUIRED FOR SIDEWALK REPLACEMENT PROJECTS. 1:3 MIN. AND 1:5 MIN. PREFERRED SIDEWALK OFFSET TAPER FOR DRIVEWAY REPLACEMENT.
⑪ LANDING REQUIRED, SEE NEXT SHEET FOR MORE INFORMATION.

REVISION:
APPROVED: JANUARY 23, 2017
OPERATIONS ENGINEER

MINNESOTA DEPARTMENT OF TRANSPORTATION

STANDARD PLAN 5-297.254 | 3 OF 4

APPROVED: 1-23-2017
REVISED:
STATE DESIGN ENGINEER

DRIVEWAY AND SIDEWALK DETAILS

STATE PROJ. NO. 0208-166 (T.H.65) SHEET NO. 18 OF 109 SHEETS

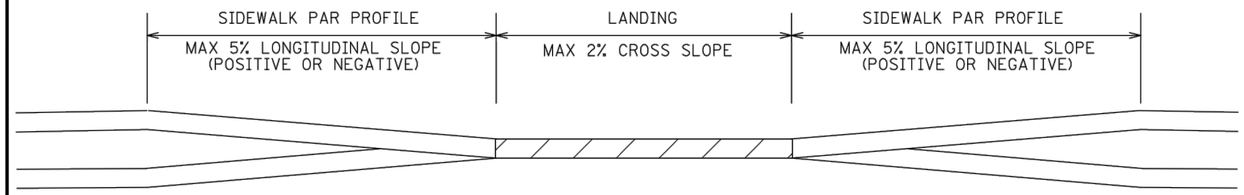

SECTION VIEW B-B

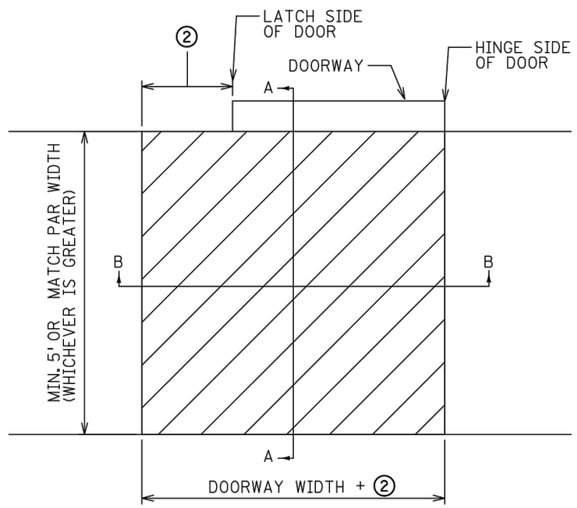

PLAN VIEW DOORWAY

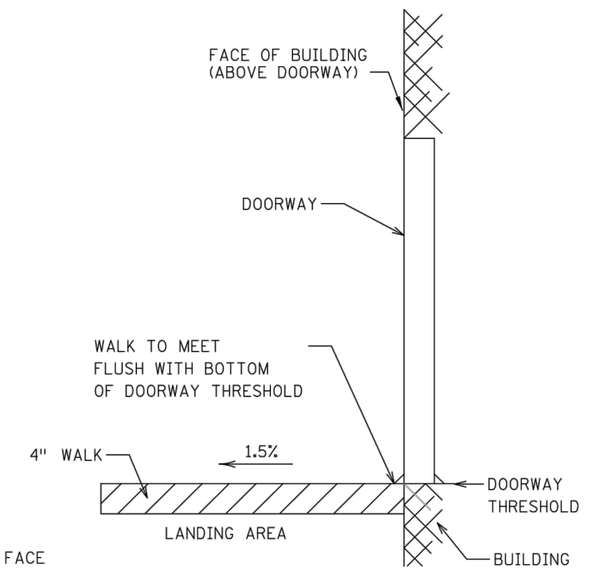

SECTION VIEW A-A

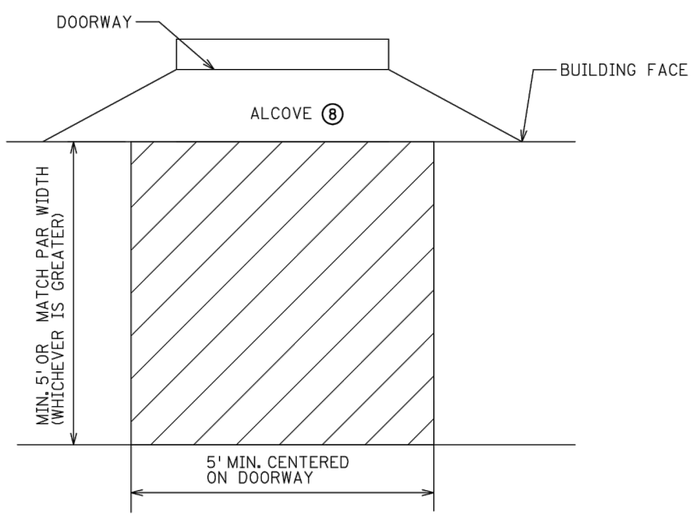

PLAN VIEW DOORWAY WITH ALCOVE

SIDEWALK LANDING REQUIREMENTS ①

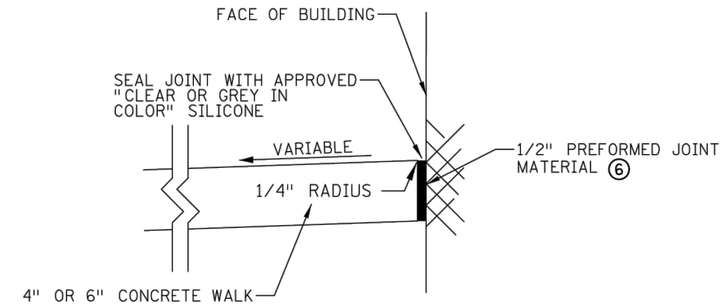

BUILDING JOINT SEAL (INCIDENTAL)

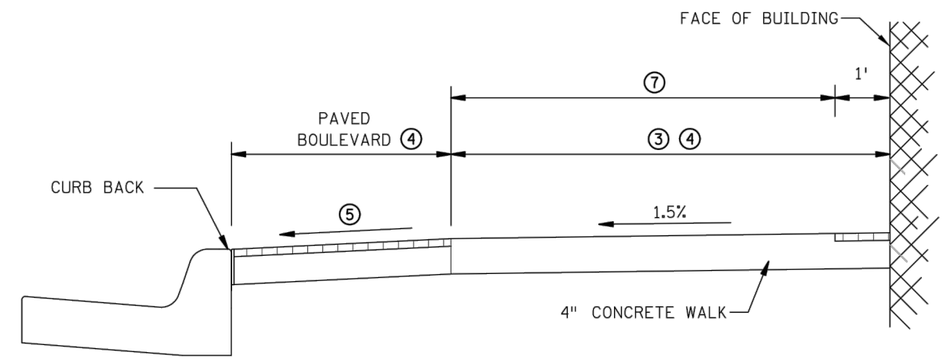

DOWNTOWN SIDEWALK TYPICAL SECTION

NOTES:

FIELD ADJUST SIDEWALK PROFILES TO MEET ALL DOORWAY THRESHOLDS.

SIDEWALK MUST MAINTAIN POSITIVE DRAINAGE AWAY FROM THE BUILDING TO THE ROADWAY.

SEE SPECIAL PROVISIONS FOR SILICONE SPECIFICATIONS.

① LANDING CRITERIA IS REQUIRED FOR ALL DOORS, PRIVATE WALKS AND STEPS.

② 18" MIN. WHEN DOOR SWINGS OUTWARD FROM BUILDING.
12" MIN WHEN DOOR SWINGS INWARD FROM BUILDING.

③ 6' MIN. PAR REQUIRED WHEN ADJACENT TO BUILDINGS.

④ 2/3 PAR TO 1/3 BOULEVARD SHOULD BE USED WHEN FEASIBLE.

⑤ 1%-5% FOR THE MAJORITY OF THE BLOCK, WITH EXCEPTIONS UP TO 8% IN CONSTRAINED AREAS. 10% MAX. FOR SHORT SECTIONS ALLOWED TO ACCOUNT FOR FIELD TOLERANCES.

⑥ FURNISH AND INSTALL BACKER ROD OF APPROPRIATE DIAMETER.

⑦ TO MINIMIZE VIBRATION AND ROLLING RESISTANCE, AREA SHOULD BE FREE OF PAVERS, STAMPED CONCRETE, AND/OR EXCESSIVE JOINTING.

⑧ 2% MAX. PER BUILDING CODE. IF GREATER THAN 2%, FLATTEN AS FEASIBLE.

LEGEND	
	LANDING - ALL SLOPES TO BE LESS THAN 2%
	OPTIONAL AESTHETIC TREATMENT

REVISION:

APPROVED: JANUARY 23, 2017

OPERATIONS ENGINEER

MINNESOTA DEPARTMENT OF TRANSPORTATION

STATE DESIGN ENGINEER

STANDARD PLAN 5-297.254 | 4 OF 4

APPROVED: 1-23-2017
REVISED:

DRIVEWAY AND SIDEWALK DETAILS

STATE PROJ. NO. 0208-166 (T.H.65) SHEET NO. 19 OF 109 SHEETS

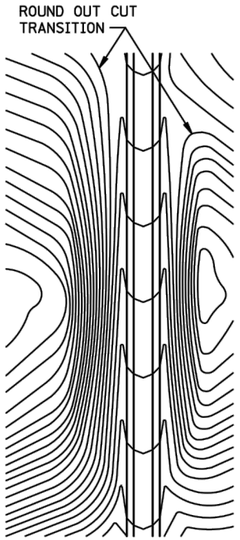

CONTOURING ROAD CUTS

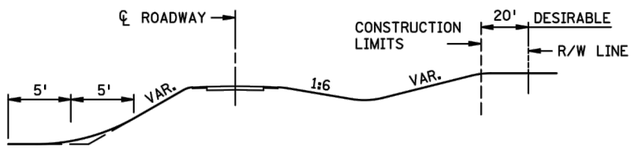

ROUNDING SHOULDERS AND BACKSLOPES

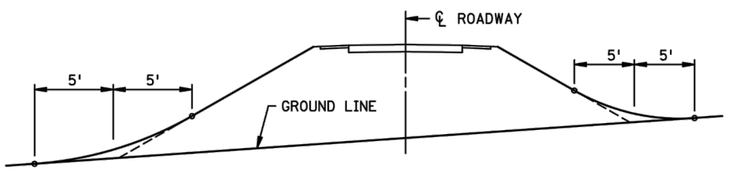

SHAPING FOR DRAINAGE ALONG THE TOE OF FILL SLOPES

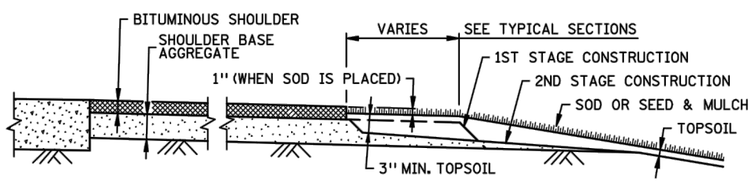

SHAPING AND TOPSOILING INSLOPES

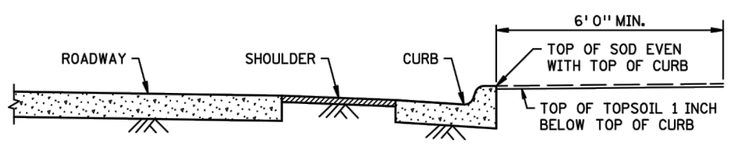

SHAPING ADJACENT TO CURBS WHEN SOD IS PLACED

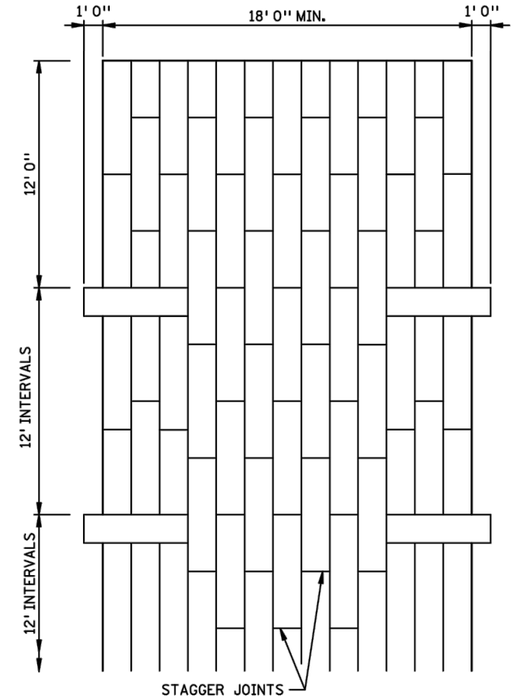

PLAN VIEW

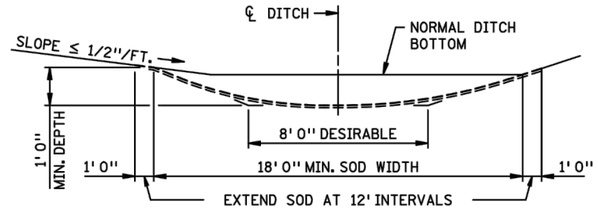

SODDED DITCH CROSS SECTION

WHERE FRONT OR BACK SLOPE IS FLAT (LESS THAN 1/2"/FT.), FIRST NOTCH DITCH AND THEN PROVIDE ROUNDING.

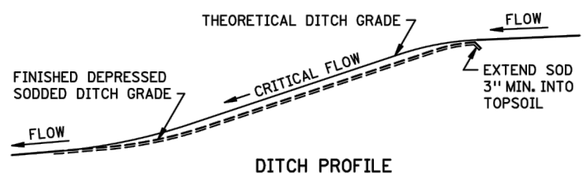

DITCH PROFILE

SODDED DITCH DETAILS

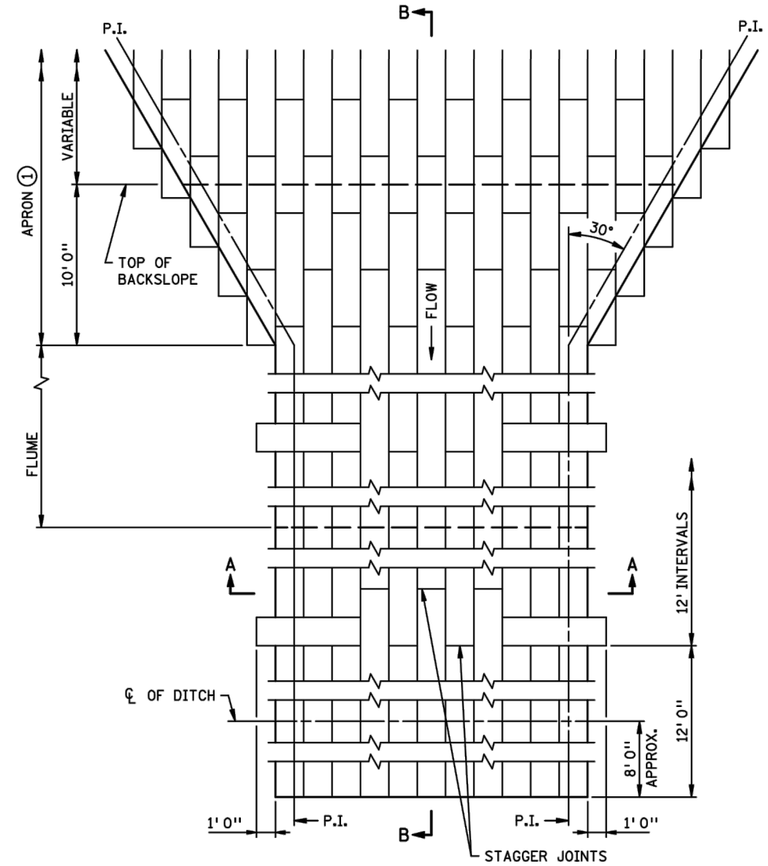

PLAN VIEW

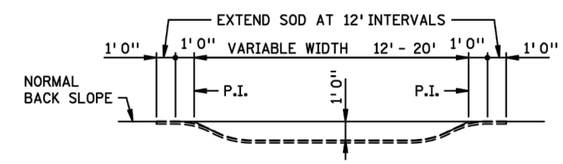

SECTION A-A

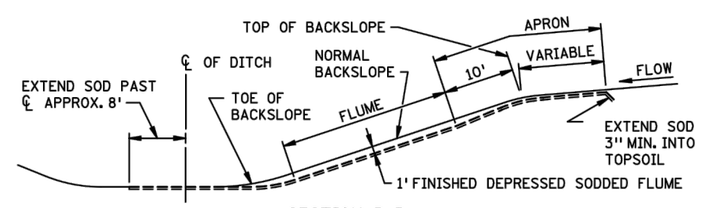

SECTION B-B

SODDED FLUME DETAILS

NOTES:

SEE SPEC. 2575.3 FOR ADDITIONAL INFORMATION.

① CONSTRUCT TAPER AS DIRECTED BY THE ENGINEER.

REVISION:

APPROVED: 2-28-2017

CHIEF ENVIRONMENTAL OFFICER

MINNESOTA DEPARTMENT OF TRANSPORTATION

STATE DESIGN ENGINEER

STANDARD PLAN 5-297.404 | 1 OF 3

APPROVED: 2-28-2017

REVISED:

PERMANENT EROSION CONTROL

ALONG ROADWAYS, DITCHES AND FLUMES

STATE PROJ. NO. 0208-166 (T.H.65) SHEET NO. 20 OF 109 SHEETS

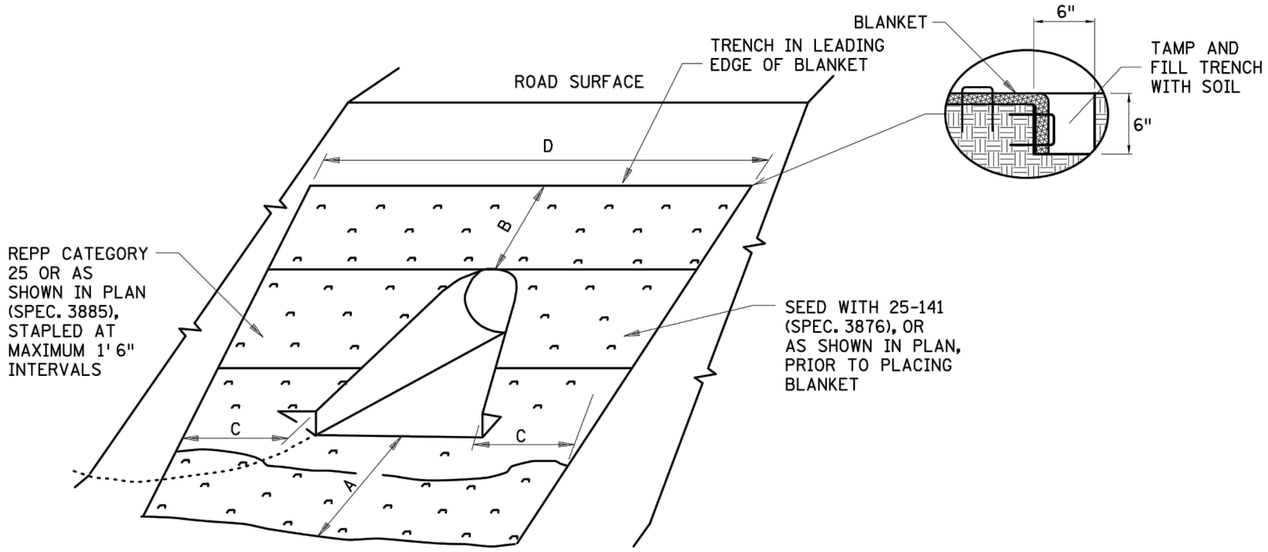

ROLLED EROSION PREVENTION PRODUCT (BLANKET) & SEED DETAIL

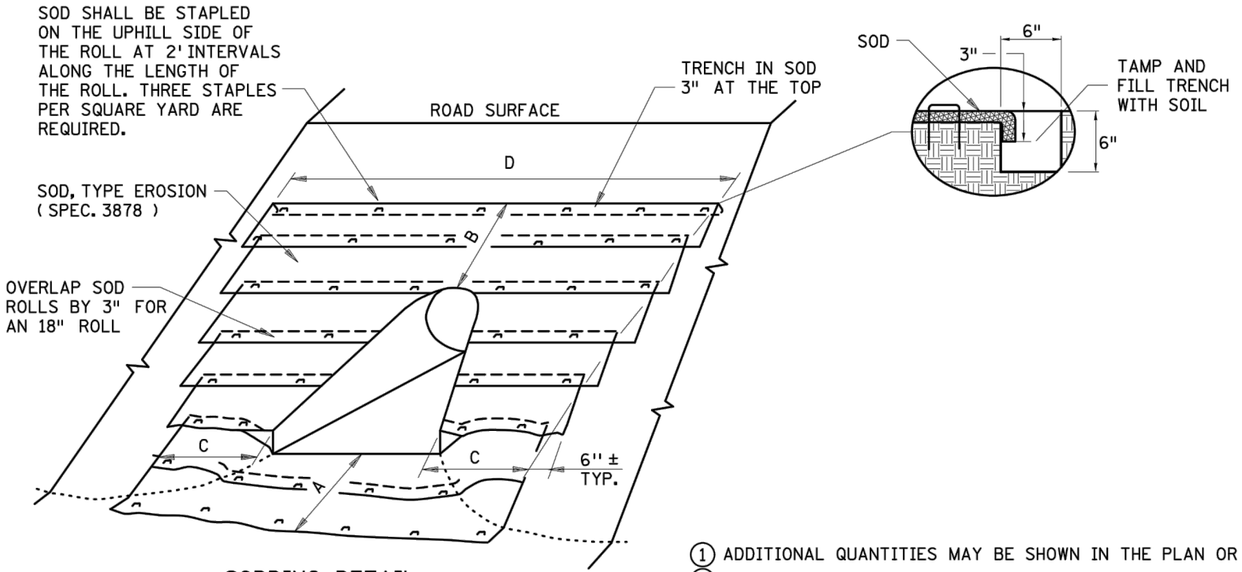

SODDING DETAIL

CULVERT INLET APRON ①										
CULVERT DIAMETER ②	SOD OR REPP (SQ. YDS.)						"A"	"B"	"C"	"D"
	CIRCULAR AND ARCH PIPE METAL APRON (PLATE 3123, PLATE 3122)	CIRCULAR AND ARCH PIPE CONCRETE APRON (PLATE 3100, PLATE 3110)	CIRCULAR AND ARCH PIPE METAL SAFETY APRON 1:4 SLOPE (PLATE 3148)	CIRCULAR AND ARCH PIPE METAL SAFETY APRON 1:6 SLOPE (PLATE 3148)	CIRCULAR CORRUGATED METAL PIPE SAFETY APRON 1:6 SLOPE (PLATE 3128)	CIRCULAR CORRUGATED METAL PIPE SAFETY APRON 1:4 SLOPE (PLATE 3128)				
15"	9	9	8	8	N/A	N/A	3'	1.5'	3'	13'
18"	13	12	12	14	16	N/A	3'	3'	3'	16'
21"	14	14	14	16	18	14	3'	3'	3'	17'
24"	16	15	16	19	21	17	3'	3'	3'	18'
27"	N/A	20	N/A	N/A	N/A	N/A	3'	4.5'	3'	20'
30"	23	22	25	30	32	N/A	3'	4.5'	3'	22'
36"	34	34	39	48	51	37	4.5'	4.5'	4.5'	27'
42"	43	40	51	64	N/A	N/A	4.5'	6'	4.5'	30'
48"	54	50	66	82	N/A	N/A	4.5'	7.5'	4.5'	34'
54"	65	58	81	102	N/A	N/A	4.5'	9'	4.5'	37'
60"	69	59	91	115	N/A	N/A	4.5'	9'	4.5'	39'
66"	69	63	N/A	N/A	N/A	N/A	4.5'	9'	4.5'	39'
72"	78	72	99	122	N/A	N/A	4.5'	10.5'	4.5'	41'

CULVERT OUTLET APRON ①										
CULVERT DIAMETER ②	SOD OR REPP (SQ. YDS.)						"A"	"B"	"C"	"D"
	CIRCULAR AND ARCH PIPE METAL APRON (PLATE 3123, PLATE 3122)	CIRCULAR AND ARCH PIPE CONCRETE APRON (PLATE 3100, PLATE 3110)	CIRCULAR AND ARCH PIPE METAL SAFETY APRON 1:4 SLOPE (PLATE 3148)	CIRCULAR AND ARCH PIPE METAL SAFETY APRON 1:6 SLOPE (PLATE 3148)	CIRCULAR CORRUGATED METAL PIPE SAFETY APRON 1:6 SLOPE (PLATE 3128)	CIRCULAR CORRUGATED METAL PIPE SAFETY APRON 1:4 SLOPE (PLATE 3128)				
15"	10	10	9	10	N/A	N/A	4.5'	1.5'	3'	13'
18"	13	13	12	14	15	N/A	6'	1.5'	3'	14'
21"	16	14	16	18	19	15	6'	1.5'	3'	15'
24"	18	18	18	21	22	18	7.5'	1.5'	3'	16'
27"	N/A	19	N/A	N/A	N/A	N/A	7.5'	1.5'	3'	17'
30"	23	23	24	28	29	N/A	9'	1.5'	3'	18'
36"	36	35	38	47	48	37	10.5'	1.5'	4.5'	23'
42"	43	40	47	58	N/A	N/A	12'	1.5'	4.5'	25'
48"	50	46	57	70	N/A	N/A	13.5'	1.5'	4.5'	27'
54"	57	50	67	84	N/A	N/A	15'	1.5'	4.5'	29'
60"	74	63	90	113	N/A	N/A	16.5'	1.5'	6'	33'
66"	75	67	N/A	N/A	N/A	N/A	16.5'	1.5'	6'	33'
72"	77	70	92	114	N/A	N/A	16.5'	1.5'	6'	34'

① ADDITIONAL QUANTITIES MAY BE SHOWN IN THE PLAN OR REQUIRED BY THE ENGINEER.
② FOR ARCH PIPE USE CLOSEST CIRCULAR PIPE DIAMETER AND APRON SLOPE. DIAMETERS LARGER THAN 72" REQUIRE SPECIAL DESIGNS.

NOTES:

REPP = ROLLED EROSION PREVENTION PRODUCT.

AREA SHOWN IN SQUARE YARDS IS FOR ONE CULVERT END.

QUANTITIES ARE CALCULATED TO INCLUDE SOD REQUIRED TO PROVIDE A 3" OVERLAP ON ALL 18" WIDE ROLLS. THIS ALLOWS FOR SHRINKAGE OF THE SOD.

FOR PIPE ARCHES USE EQUIVALENT PIPE DIAMETER TO APPROXIMATE AREA.

FOR CORRUGATED POLYETHYLENE PIPE METAL APRON (PLATE 3129), USE THE METAL APRON COLUMN (PLATE 3123).

AREAS AND DIMENSIONS ARE APPROXIMATE AND ARE BASED ON APRON SIDE SLOPES OF NO STEEPER THAN 1:2, UNLESS INDICATED AS FOR SAFETY APRONS.

CARE SHOULD BE TAKEN IN SELECTING SOD TO STABILIZE THE APRON. RIP-RAP SHOULD BE USED FOR FLOW VELOCITIES GREATER THAN 6 FPS.

REVISION:

APPROVED: JANUARY 8, 2020
MARNI KARNOWSKI
CHIEF ENVIRONMENTAL OFFICER

MINNESOTA DEPARTMENT OF TRANSPORTATION

STANDARD PLAN 5-297.404 | 2 OF 3

APPROVED: 1-8-2020
REVISED:
THOMAS STYRBICKI
STATE DESIGN ENGINEER

PERMANENT EROSION CONTROL

TURF ESTABLISHMENT DETAIL AT CULVERT ENDS

STATE PROJ. NO. 0208-166 (T.H.65) SHEET NO. 21 OF 109 SHEETS

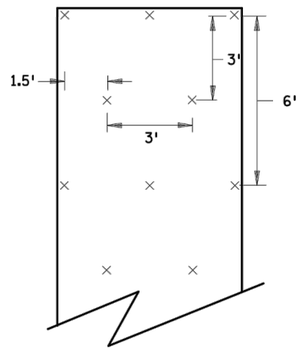

SLOPES FLATTER THAN 1:2
120 STAPLES PER 100 SQ YD

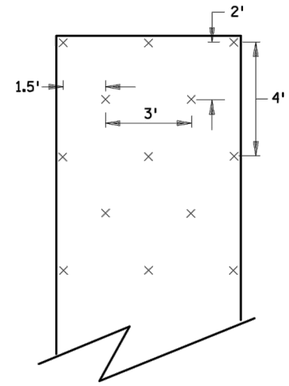

SLOPES 1:2 TO 1:1
170 STAPLES PER 100 SQ YD

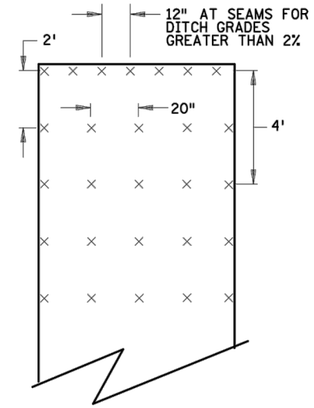

CHANNEL AND DITCH APPLICATIONS
350 STAPLES PER 100 SQ YD

BLANKET STAPLE PATTERN

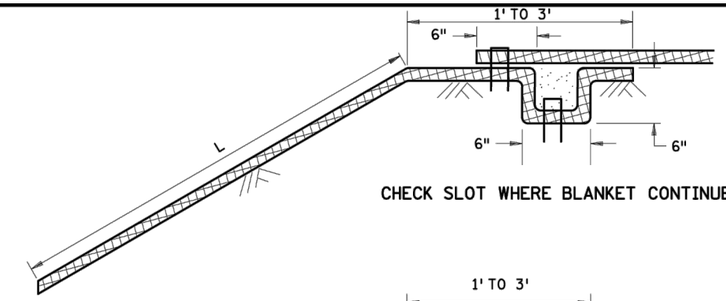

CHECK SLOT WHERE BLANKET CONTINUES

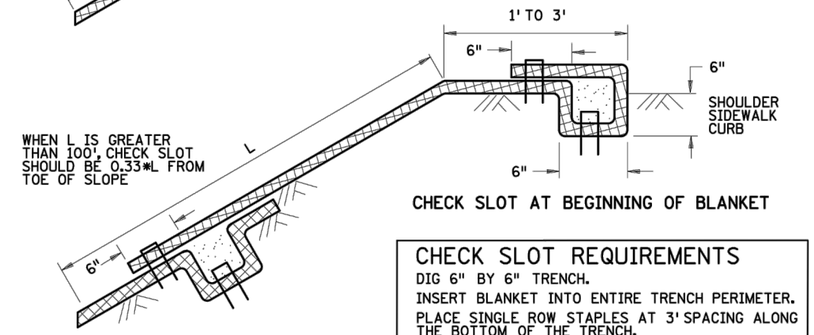

CHECK SLOT AT BEGINNING OF BLANKET

CHECK SLOT REQUIREMENTS

DIG 6" BY 6" TRENCH.

INSERT BLANKET INTO ENTIRE TRENCH PERIMETER.

PLACE SINGLE ROW STAPLES AT 3' SPACING ALONG THE BOTTOM OF THE TRENCH.

BACKFILL TRENCH WITH SOIL AND TAMP.

PLACE SINGLE ROW STAPLES AT 3' SPACING ON OVERLAP.

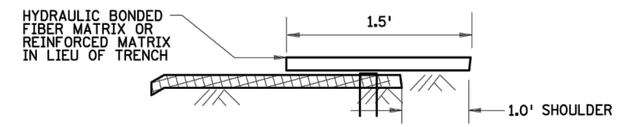

CHECK SLOT ALTERNATIVE
PLACE SINGLE ROW STAPLES AT 12" SPACING

CHECK SLOT DETAILS

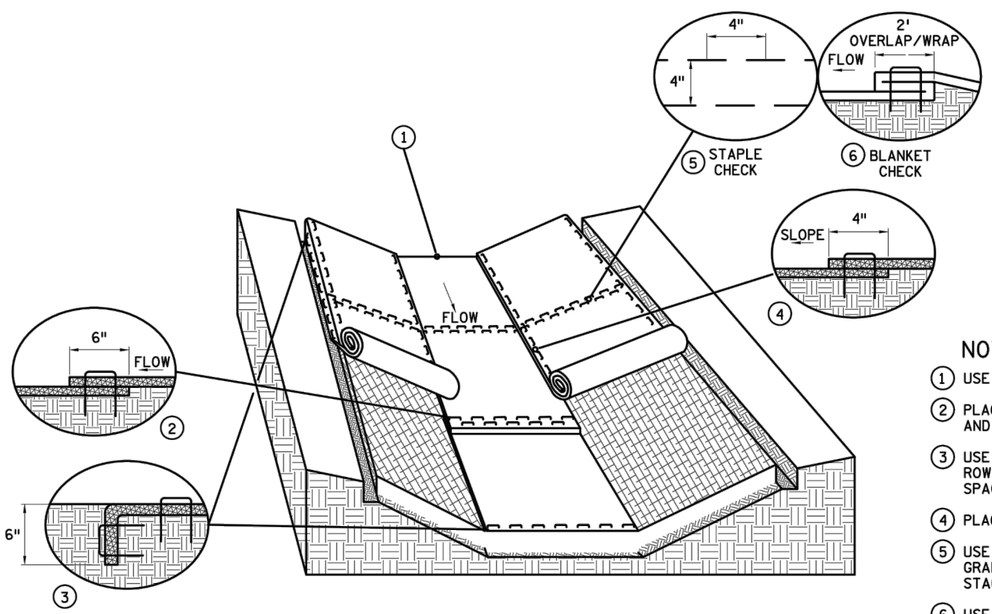

DITCH BLANKET STAPLE DETAIL

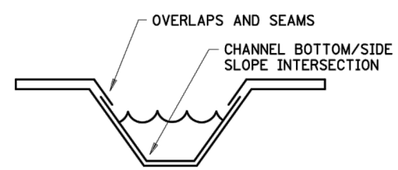

DITCH BLANKET CRITICAL POINTS 7

NOTES:

1. USE CHECK SLOT DETAIL (NO ALTERNATES).
2. PLACE DOUBLE ROW OF STAPLES STAGGERED 4" APART AND 4" ON CENTER.
3. USE 6" X 6" TRENCH TO PLACE BLANKET. PLACE SINGLE ROW OF STAPLES ON TOP AND TRENCH SIDES AT 12" SPACING. BACKFILL TRENCH WITH SOIL AND TAMP.
4. PLACE SINGLE ROW OF STAPLES AT 12" SPACING.
5. USE STAPLE CHECK FOR CHANNEL SLOPES LESS THAN 2.5%. GRADE AT 100' INTERVALS. PLACE DOUBLE ROW OF STAPLES STAGGERED 4" APART AND AT 4" SPACING.
6. USE BLANKET CHECKS FOR THE FOLLOWING SLOPES:
   2.5%-3% 100' INTERVALS
   3%-5% 50' INTERVALS
   5%-7% 25' INTERVALS
7. CRITICAL POINTS SHALL BE SECURED WITH PROPER STAPLE PATTERNS.

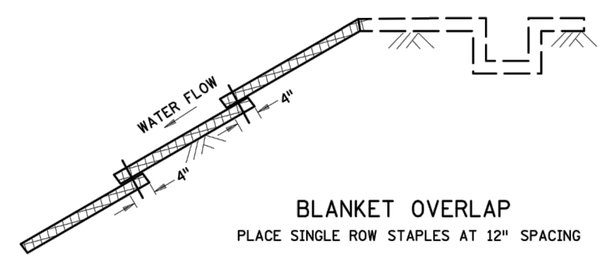

BLANKET OVERLAP
PLACE SINGLE ROW STAPLES AT 12" SPACING

GENERAL BLANKET INSTALLATION REQUIREMENTS

REPP = ROLLED EROSION PREVENTION PRODUCT.

PREPARE SOIL AS PER SPECIFICATION 2574.

LAY PARALLEL OR PERPENDICULAR TO THE DIRECTION OF WATER FLOW.

OVERLAP ADJACENT STRIP EDGES A MINIMUM OF 4".

OVERLAP BLANKET 6" (MINIMUM) AT EACH END. OVERLAP BOTTOM END OF UPPER BLANKET OVER TOP END OF LOWER BLANKET. STAPLE ALONG OVERLAP EVERY 1.5'.

THE UPPERMOST BLANKET OF ALL SLOPE APPLICATIONS MUST START IN A CHECK SLOT. IF SLOPE LENGTH (L) IS 100' OR GREATER, INSERT BLANKET INTO A CHECK SLOT ⅓ FROM THE BOTTOM OF THE SLOPE.

REVISION:

APPROVED: JANUARY 8, 2020
MARNI KARNOWSKI
CHIEF ENVIRONMENTAL OFFICER

MINNESOTA DEPARTMENT OF TRANSPORTATION

STANDARD PLAN 5-297.404 | 3 OF 3

APPROVED: 1-8-2020
REVISED:

THOMAS STYRBICKI
STATE DESIGN ENGINEER

PERMANENT EROSION CONTROL

REPP (BLANKET) STAPLE PATTERN FOR SLOPES

STATE PROJ. NO. 0208-166 (T.H.65) SHEET NO. 22 OF 109 SHEETS

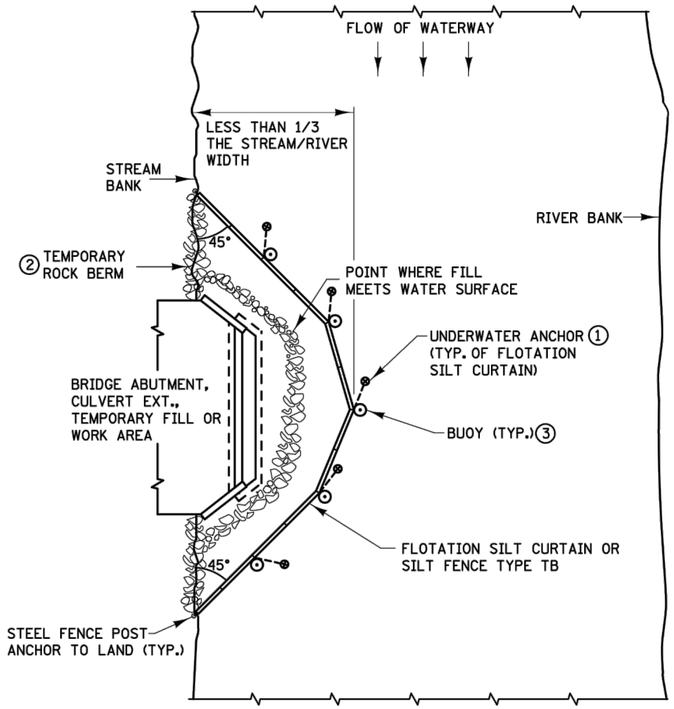

PLAN VIEW FOR STREAM ⑤

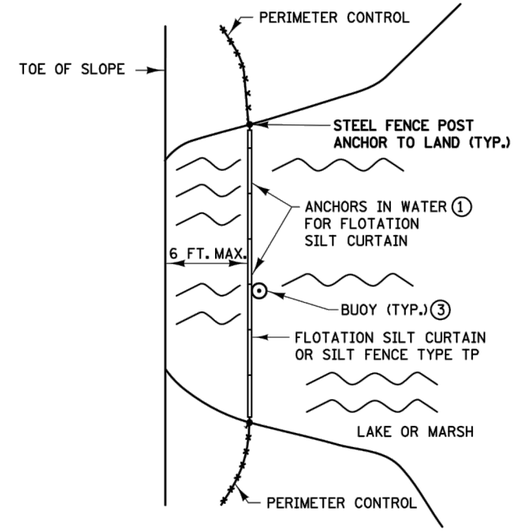

PLAN VIEW FOR LAKE OR MARSH ⑤

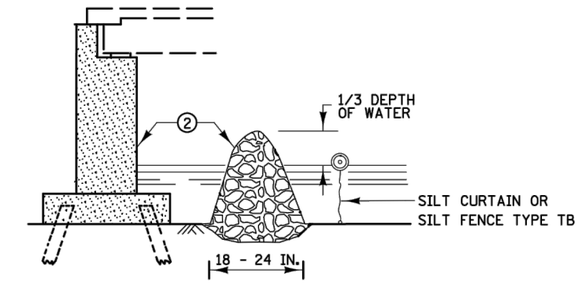

TEMPORARY ROCK BERM
FOR SEDIMENT CONTROL

INSTALLATION GUIDELINES
SILT FENCE TYPE TB
MINIMUM WATER DEPTH: 1 FT.
MAXIMUM WATER DEPTH: 3 FT.
MAXIMUM WATER VELOCITY: 5 FT./SEC.

INSTALLATION GUIDELINES ④
FLOTATION SILT CURTAIN
TYPE: STILL WATER
MINIMUM WATER DEPTH: 3 FT.
MAXIMUM WATER DEPTH: 10 FT.
MAXIMUM WATER VELOCITY: 2 FT./SEC.
MAXIMUM WAVE HEIGHT: 1 FT

INSTALLATION GUIDELINES ④
FLOTATION SILT CURTAIN
TYPE: MOVING WATER
MINIMUM WATER DEPTH: 3 FT.
MAXIMUM WATER DEPTH: 10 FT.
MAXIMUM WATER VELOCITY: 5 FT./SEC.
MAXIMUM WAVE HEIGHT: 2 FT.

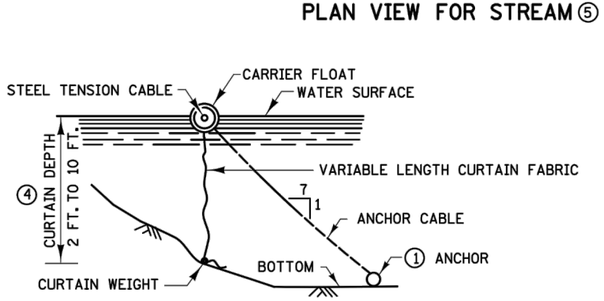

FLOTATION SILT CURTAIN

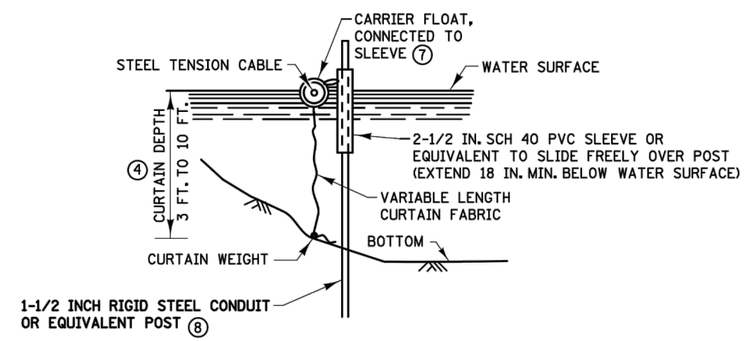

ALTERNATE FLOTATION SILT CURTAIN

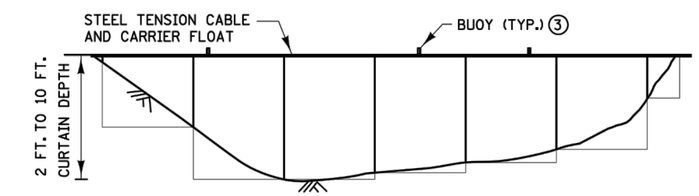

FRONT VIEW FOR FLOTATION SILT CURTAIN

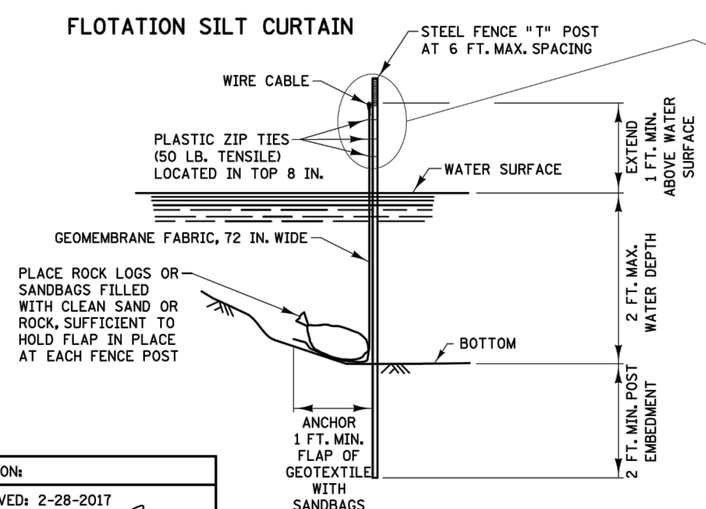

SILT FENCE TYPE TB ⑥

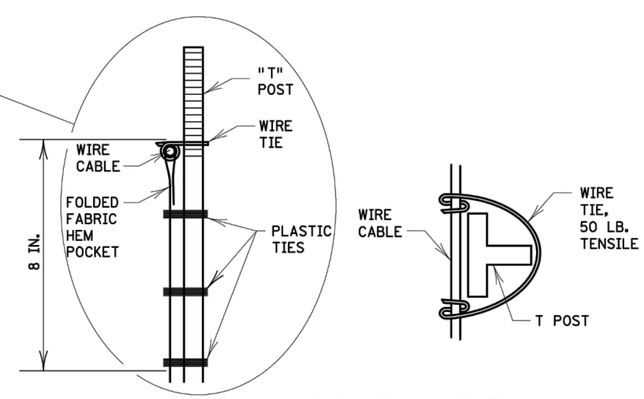

FABRIC/CABLE/POST CONNECTION

NOTES:

SEE SPECS. 2573, 3886, 3887 & 3893.

① FOR ANCHOR SPACING AND WEIGHT REQUIREMENTS, SEE SPEC. 2573.

② IN AREAS WHERE THE PLAN CALLS FOR RIPRAP AT A BRIDGE, CULVERT, OR SLOPE, A TEMPORARY ROCK BERM CONSTRUCTED FROM THE RIPRAP CAN BE USED TO PROVIDE ADDITIONAL PROTECTION. WHEN THE WORK IS COMPLETE THE RIPRAP CAN THEN BE MOVED TO THE PERMANENT LOCATION INDICATED IN THE PLANS. THE TEMPORARY ROCK BERM IS INCIDENTAL.

③ ON U.S. COAST GUARD OR OTHER MOTORIZED WATERWAYS, BUOYS ARE REQUIRED TO MARK THE ENDS AND SPECIAL AREAS FOR VISIBILITY. PLACE BUOYS AS REQUIRED FOR NAVIGATIONAL PURPOSES.

④ MINIMUM WATER DEPTH APPLIES TO THE DEEPEST POINT ALONG THE FLOTATION SILT CURTAIN OR SILT FENCE TYPE TB FOR DETERMINING APPLICABILITY OF FLOTATION SILT CURTAIN OR SILT FENCE TYPE TB.

⑤ SILT CURTAIN SHOULD BE REMOVED WHEN THE AREA CONTRIBUTING DIRECT RUNOFF HAS BEEN TEMPORARILY OR PERMANENTLY STABILIZED. SILT CURTAIN SHOULD ALSO BE REMOVED BEFORE WINTER IF ICE UP OR ICE FLOW IS ANTICIPATED.

⑥ EMBED POST INTO BOTTOM A MINIMUM OF 40% OF THE WATER DEPTH (INCLUDING WAVE HEIGHT), BUT IN NO CASE SHALL EMBEDMENT BE LESS THAN 2 FEET.

⑦ ANCHOR FLOAT MUST BE CONNECTED SECURELY TO SLEEVE WITH A MINIMUM TENSILE STRENGTH OF 100 LBS. CONNECTION METHOD MUST ALLOW FOR SLEEVE TO MOVE FREELY ON POST.

⑧ PROVIDE SUFFICIENT NUMBER OF POST ANCHORS TO MAINTAIN SILT CURTAIN POSITION.

REVISION:
APPROVED: 2-28-2017
CHIEF ENVIRONMENTAL OFFICER

MINNESOTA DEPARTMENT OF TRANSPORTATION

STANDARD PLAN 5-297.405 | 1 OF 8
APPROVED: 2-28-2017
REVISED:
STATE DESIGN ENGINEER

TEMPORARY SEDIMENT CONTROL
SILT CURTAIN OR SILT FENCE TYPE TB

STATE PROJ. NO. 0208-166 (T.H.65) SHEET NO. 23 OF 109 SHEETS

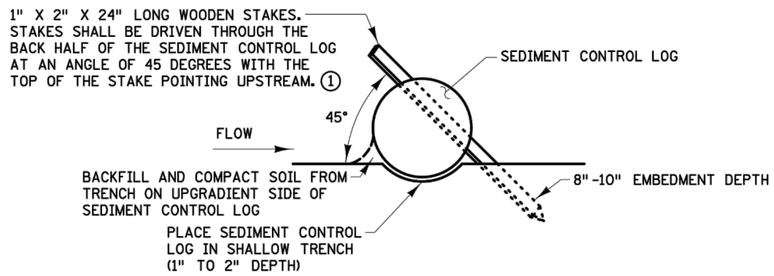

TYPES: STRAW, WOOD FIBER, OR COIR

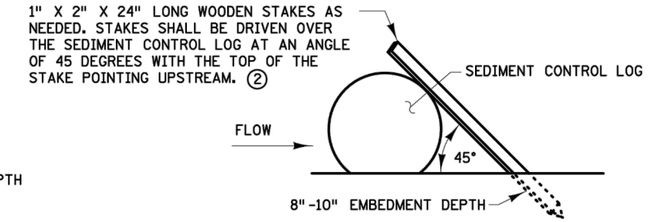

TYPES: WOOD CHIP, COMPOST, OR ROCK

SEDIMENT CONTROL LOGS

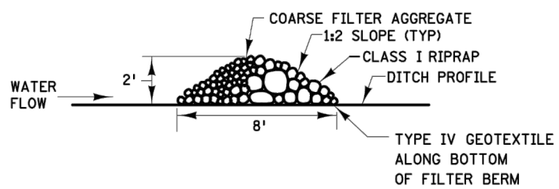

TYPE 3 (ROCK WEEPER)

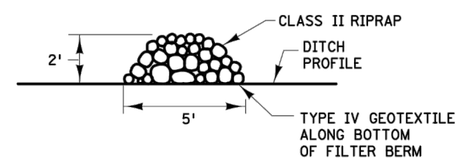

TYPE 5 (ROCK)

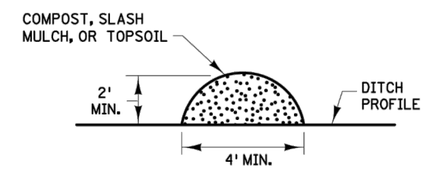

TYPE 1 (COMPOST), TYPE 2 (SLASH MULCH), OR TYPE 4 (TOPSOIL)

FILTER BERMS

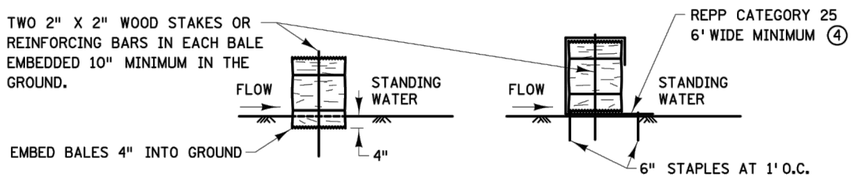

EMBEDMENT METHOD

REPP (BLANKET) METHOD (ALTERNATE)

BALE BARRIERS3

NOTES:

REPP = ROLLED EROSION PREVENTION PRODUCT.

SEE SPECS. 2573, 3149, 3874, 3882, 3885, 3886, AND 3897.

1. SPACE BETWEEN STAKES SHALL BE A MAXIMUM OF 1' FOR DITCH CHECKS OR 2' FOR OTHER APPLICATIONS.
2. PLACE STAKES AS NEEDED TO PREVENT MOVEMENT OF SEDIMENT CONTROL LOGS PLACED ON SLOPES OR AS NEEDED DUE TO OTHER FACTORS. STAKES SHALL BE INCIDENTAL.
3. TO BE USED FOR CRITICAL PERIMETER CONTROL AREAS WHERE STANDING WATER OCCURS (6" MAXIMUM DEPTH). BALES SHALL CONSIST OF TYPE 1 MULCH OF APPROXIMATELY 14" X 18" X 36" LONG. BALES SHALL BE PLACED ON EDGE AND BUTTED TIGHT TO ADJACENT BALES.
4. INSTEAD OF TRENCHING, PLACE BALE ON THE REPP (BLANKET) AND WRAP BLANKET AROUND THE BALE. PLACE STAKE THROUGH BALE AND BLANKET.

REVISION:

APPROVED: JANUARY 8, 2020

MARNI KARNOWSKI
CHIEF ENVIRONMENTAL OFFICER

MINNESOTA DEPARTMENT OF TRANSPORTATION

THOMAS STYRBICKI
STATE DESIGN ENGINEER

STANDARD PLAN 5-297.405	2 OF 8	TEMPORARY SEDIMENT CONTROL
APPROVED: 1-8-2020 REVISED:		FILTER BERMS, SEDIMENT CONTROL LOGS, AND BALE BARRIERS
STATE PROJ. NO. 0208-166 (T.H.65)	SHEET NO. 24 OF 109 SHEETS	

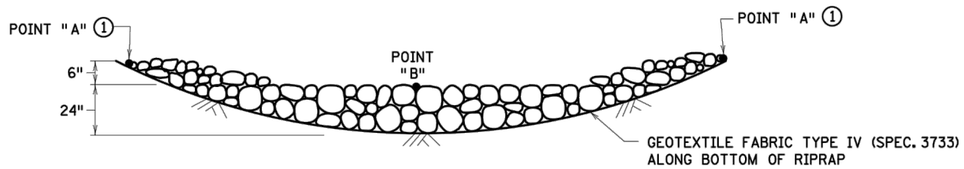

ROCK DITCH CHECKS
FILTER BERMS TYPE 3 (ROCK WEEPER) OR FILTER TYPE 5 (ROCK) ③
FOR USE ON ROUGH-GRADED AREAS
ONLY FOR USE OUTSIDE CLEAR ZONE ②

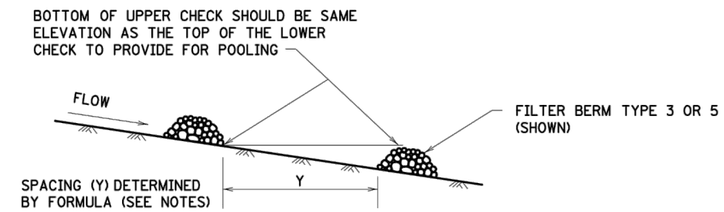

DITCH CHECK SPACING
FOR ALL FILTER BERM TYPES

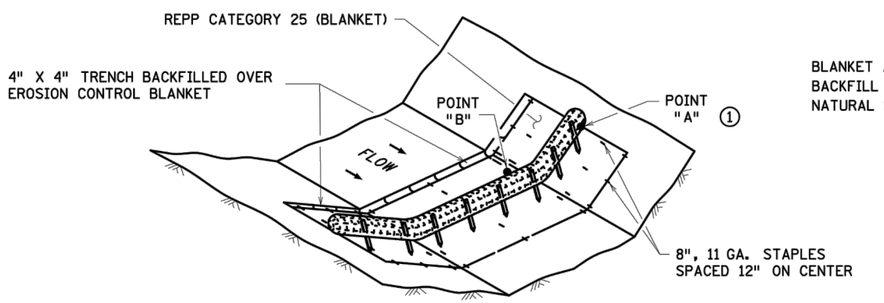

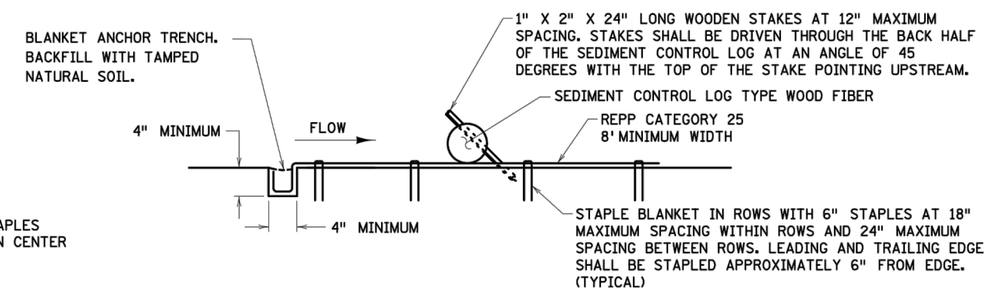

SEDIMENT CONTROL LOG TYPE REPP (BLANKET) SYSTEM ④

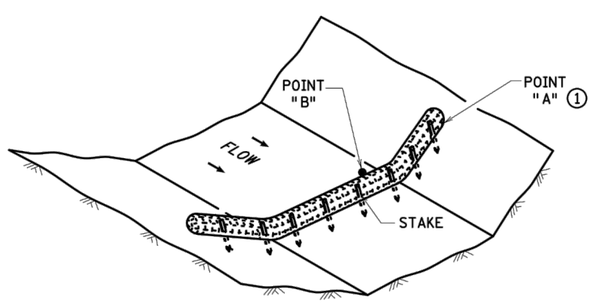

SEDIMENT CONTROL LOG TYPE WOOD FIBER, OR TYPE COMPOST ⑤
FOR USE ON ROUGH GRADED AREAS

NOTES:

REPP = ROLLED EROSION PREVENTION PRODUCT.

SEE SPECS. 2573, 3601, 3733, 3885, 3886 & 3889.

FOR DITCH CHECKS, PLACE SEDIMENT CONTROL LOG PERPENDICULAR TO FLOW AND IN A CRESCENT SHAPE WITH THE ENDS FACING UPSTREAM.

APPROXIMATE SPACING BETWEEN EACH DITCH CHECK SHOULD BE DETERMINED FROM THE FOLLOWING SPACING FORMULA:

$$\text{APPROXIMATE SPACING OF DITCH CHECKS (FT.)} = Y = \frac{\text{DITCH CHECK HEIGHT (FT.)}}{\text{\% CHANNEL SLOPE}} \times 100$$

① POINT "A" MUST BE A MINIMUM OF 6" HIGHER THAN POINT "B" TO ENSURE THAT WATER FLOWS OVER THE DIKE AND NOT AROUND THE ENDS.

② ROCK DITCH CHECKS PLACED WITHIN THE CLEAR ZONE ARE TO BE 18" OR LESS IN HEIGHT. A 1:6 APPROACH AND DEPARTURE SLOPE SHALL BE PROVIDED.

③ DITCH GRADE 3% - 5%, MAX. FLOW VELOCITY 12 FT./SEC.

④ DITCH GRADE 1.5% - 3%, MAX. FLOW VELOCITY 4.5 FT./SEC.

⑤ DITCH GRADE 1.5% - 3%, MAX. FLOW VELOCITY 1.5 FT./SEC.

REVISION:

APPROVED: JANUARY 8, 2020
MARNI KARNOWSKI
CHIEF ENVIRONMENTAL OFFICER

MINNESOTA DEPARTMENT OF TRANSPORTATION

STANDARD PLAN 5-297.405 | 3 OF 8

APPROVED: 1-8-2020
REVISED:
THOMAS STYRBICKI
STATE DESIGN ENGINEER

TEMPORARY SEDIMENT CONTROL
DITCH CHECK

STATE PROJ. NO. 0208-166 (T.H.65) SHEET NO. 25 OF 109 SHEETS

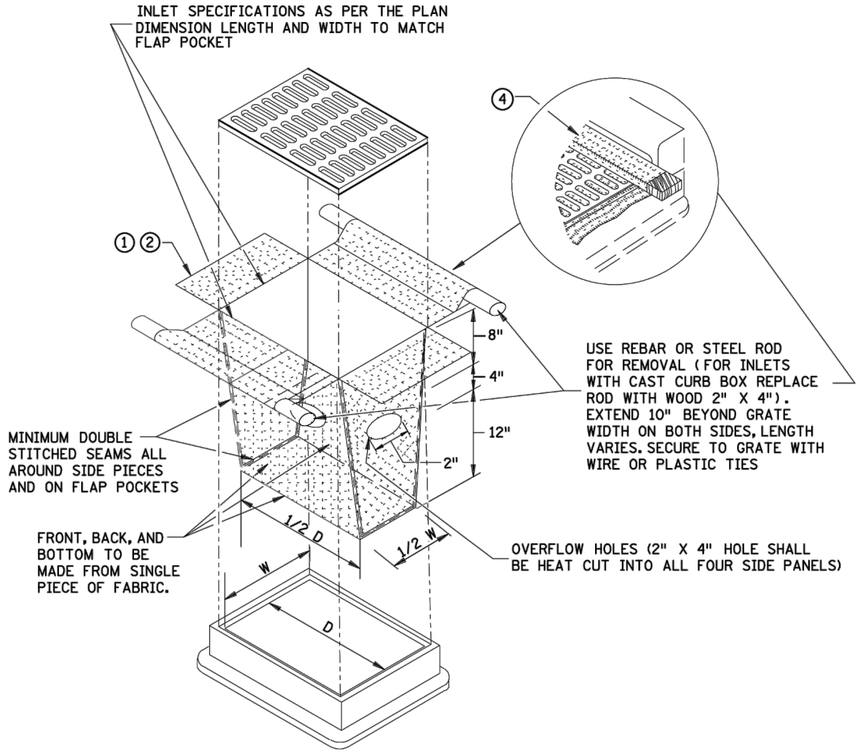

FILTER BAG INSERT ③

(CAN BE INSTALLED IN ANY INLET TYPE WITH OR WITHOUT A CURB BOX)

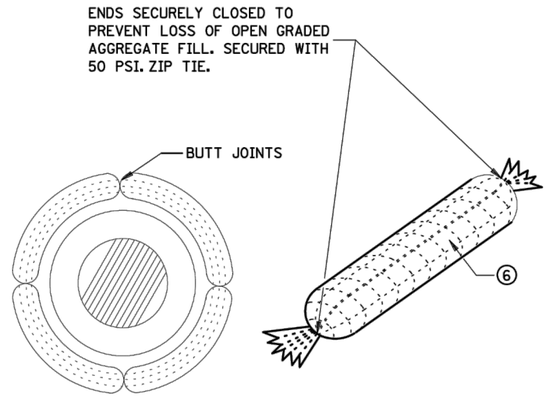

ROCK LOG/COMPOST LOG

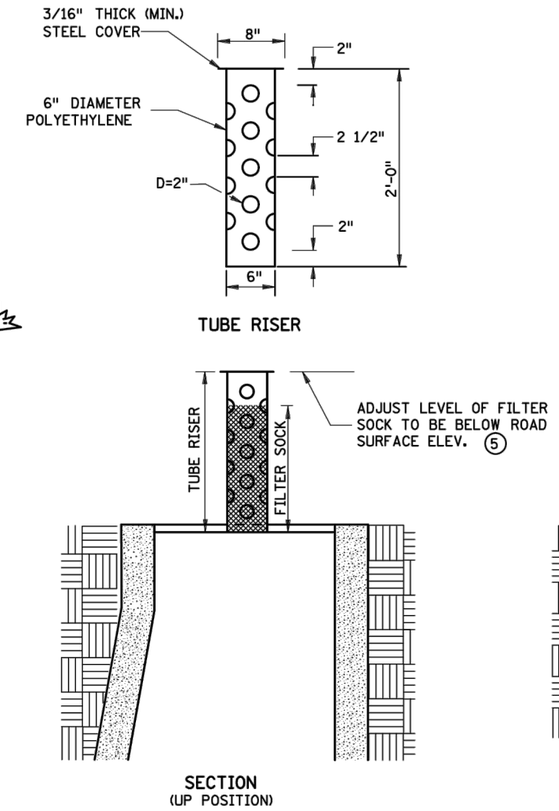

POP-UP HEAD

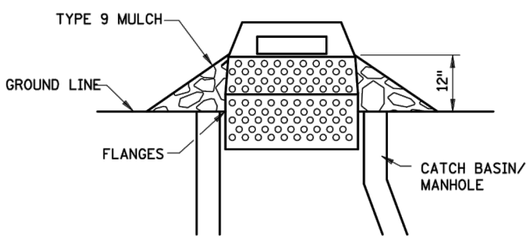

SEDIMENT CONTROL INLET HAT

NOTE:
THE SEDIMENT CONTROL BARRIER SHALL BE A METAL OR PLASTIC/POLYETHYLENE RISER SIZED TO FIT INSIDE THE CATCH BASIN/MANHOLE; HAVE PERFORATIONS TO ALLOW FOR WATER INFILTRATION; HAVE AN OVERFLOW OPENING, FLANGES AND A LID/COVER.

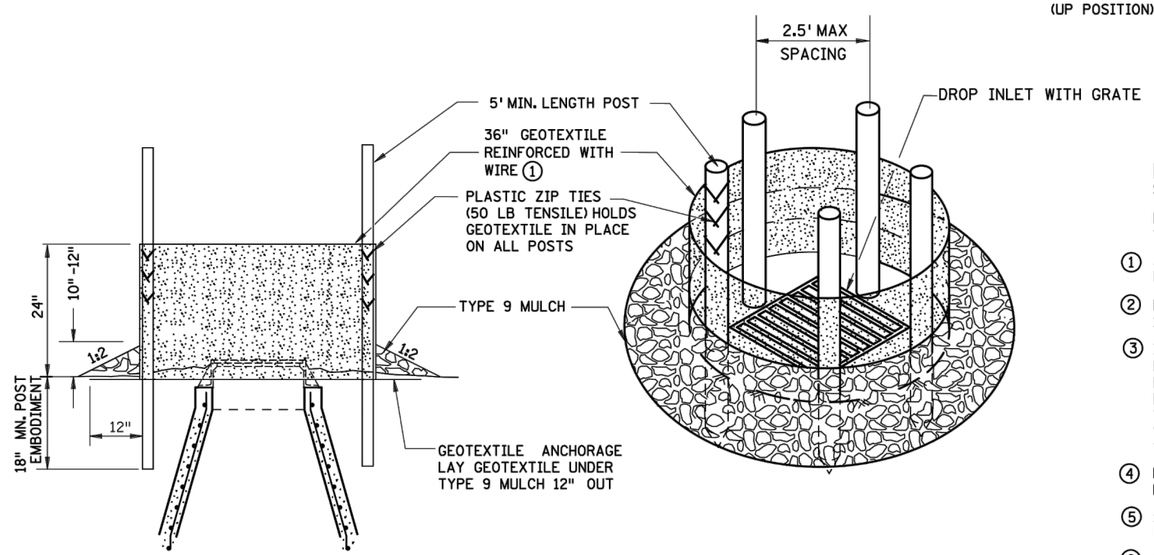

SILT FENCE RING AND ROCK FILTER BERM

USE WHERE INLET DRAINS IN AN AREA WITH SLOPES AT 1:3 or LESS

NOTES:

SEE SPECS. 2573, 3137, & 3886.

DEVICES MUST BE ADJUSTED ACCORDINGLY AS TO NOT CAUSE FLOODING ON ROADWAY THAT WOULD IMPEED TRAFFIC FLOW.

① ALL GEOTEXTILE USED FOR INLET PROTECTION SHALL BE MONOFILAMENT IN BOTH DIRECTIONS, MEETING SPEC. 3886.

② FINISHED SIZE, INCLUDING POCKETS WHERE REQUIRED SHALL EXTEND A MINIMUM OF 10 INCHES AROUND THE PERIMETER TO FACILITATE MAINTENANCE OR REMOVAL.

③ INSTALLATION NOTES:
DO NOT PLACE FILTER BAG INSERT IN INLETS SHALLOWER THAN 30 INCHES, MEASURED FROM THE BOTTOM OF THE INLET TO THE TOP OF THE GRATE. THE PLACED BAG SHALL HAVE A MINIMUM SIDE CLEARANCE OF 3 INCHES BETWEEN THE INLET WALLS AND THE BAG, MEASURED AT THE BOTTOM OF THE OVERFLOW HOLES. WHERE NECESSARY THE CONTRACTOR SHALL CLINCH THE BAG, USING PLASTIC ZIP TIES, TO ACHIEVE THE 3 INCH SIDE CLEARANCE.

④ FLAP POCKETS SHALL BE LARGE ENOUGH TO ACCEPT WOOD 2 INCH X 4 INCH OR USE A ROCK SOCK OR SAND BAGS IN PLACE OF THE FLAP POCKETS.

⑤ SOCK HEIGHT MUST NOT BE SO HIGH AS TO SLOW DOWN WATER FILTRATION TO CAUSE FLOODING OF THE ROADWAY.

⑥ GEOTEXTILE SOCK BETWEEN 4-10 FEET LONG AND 4-6 INCH DIAMETER. SEAM TO BE JOINED BY TWO ROWS OF STITCHING WITH A PLASTIC MESH BACKING OR PROVIDE A HEAT BONDED SEAM (OR APPROVED EQUIVALENT). FILL ROCK LOG WITH OPEN GRADED AGGREGATE CONSISTING OF SOUND DURABLE PARTICLES OF COARSE AGGREGATE CONFORMING TO SPEC. 3137 TABLE 3137-1; CA-3 GRADATION.

REVISION:

APPROVED: 2-28-2017
CHIEF ENVIRONMENTAL OFFICER

MINNESOTA DEPARTMENT OF TRANSPORTATION

STANDARD PLAN 5-297.405 | 4 OF 8

APPROVED: 2-28-2017
REVISED:
STATE DESIGN ENGINEER

TEMPORARY SEDIMENT CONTROL

STORM DRAIN INLET PROTECTION

STATE PROJ. NO. 0208-166 (T.H.65) SHEET NO. 26 OF 109 SHEETS

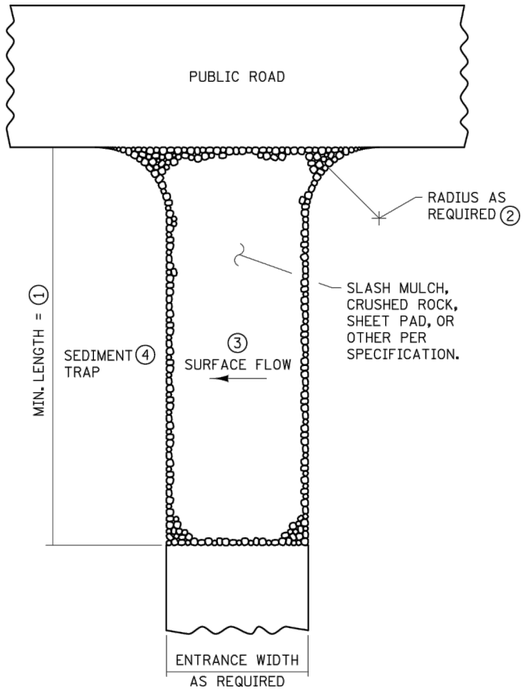

SLASH MULCH, CRUSHED ROCK, OR SHEET PAD CONSTRUCTION EXIT ⑤⑦

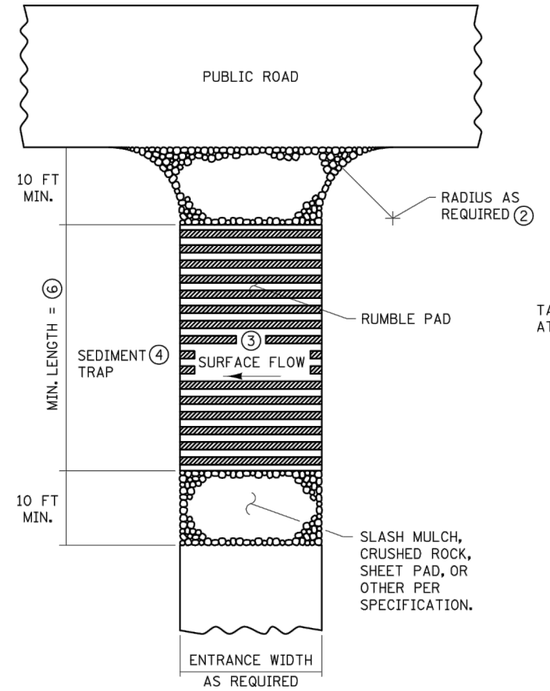

RUMBLE PAD CONSTRUCTION EXIT ⑤⑦

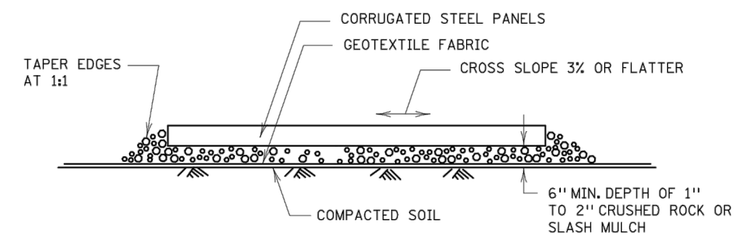

RUMBLE PAD

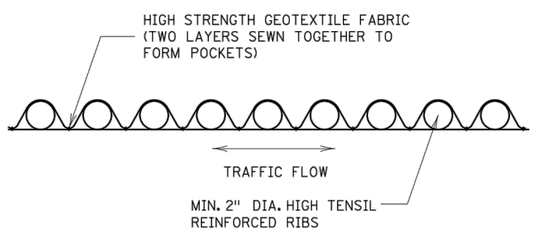

SHEET PAD

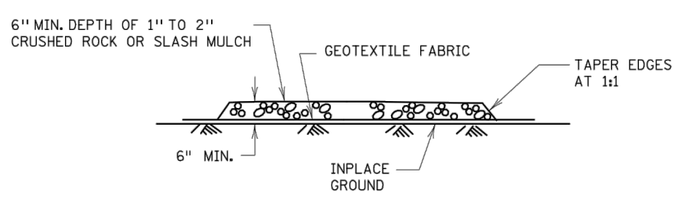

SLASH MULCH OR CRUSHED ROCK

NOTES:

SEE SPECS. 2573 & 3882.

① MINIMUM LENGTH SHALL BE THE GREATER OF 50 FEET OR A LENGTH SUFFICIENT TO ALLOW A MINIMUM OF 5 TIRE ROTATIONS ON THE PROVIDED PAD. MINIMUM LENGTH SHALL BE CALCULATED USING THE LARGEST TIRE WHICH WILL BE USED IN TYPICAL OPERATIONS.

② PROVIDE RADIUS OR WIDEN PAD SUFFICIENTLY TO PREVENT VEHICLE TIRES FROM TRACKING OFF OF PAD WHEN LEAVING SITE.

③ IF RUNOFF FROM DISTURBED AREAS FLOWS TOWARD CONSTRUCTION EXITS, PREVENT RUNOFF FROM DRAINING DIRECTLY TO PUBLIC ROAD OVER CONSTRUCTION EXIT BY CROWNING THE EXIT OR SLOPING TO ONE SIDE. IF SURFACE GRADING IS INSUFFICIENT, PROVIDE OTHER MEANS OF INTERCEPTING RUNOFF.

④ IF RUNOFF FROM CONSTRUCTION EXITS WILL DRAIN OFF OF PROJECT SITE, PROVIDE SEDIMENT TRAP WITH STABILIZED OVERFLOW.

⑤ IF A TIRE WASH OFF IS REQUIRED THE CONSTRUCTION EXITS SHALL BE GRADED TO DRAIN THE WASH WATER TO A SEDIMENT TRAP.

⑥ MINIMUM LENGTH OF RUMBLE PAD SHALL BE 20 FEET, OR AS REQUIRED TO REMOVE SEDIMENT FROM TIRES. IF SIGNIFICANT SEDIMENT IS TRACKED FROM THE SITE, THE RUMBLE PAD SHALL BE LENGTHENED OR THE DESIGN MODIFIED TO PROVIDE ADDITIONAL VIBRATION. WASH-OFF LENGTH SHALL BE AS REQUIRED TO EFFECTIVELY REMOVE CONSTRUCTION SEDIMENT FROM VEHICLE TIRES.

⑦ MAINTENANCE OF CONSTRUCTION EXITS SHALL OCCUR WHEN THE EFFECTIVENESS OF SEDIMENT REMOVAL HAS BEEN REDUCED. MAINTENANCE SHALL CONSIST OF REMOVING SEDIMENT AND CLEANING THE MATERIALS OR PLACING ADDITIONAL MATERIAL (SLASH MULCH OR CRUSHED ROCK) OVER SEDIMENT FILLED MATERIAL TO RESTORE EFFECTIVENESS.

REVISION:

APPROVED: 2-28-2017

CHIEF ENVIRONMENTAL OFFICER

MINNESOTA DEPARTMENT OF TRANSPORTATION

STATE DESIGN ENGINEER

STANDARD PLAN 5-297.405 | 5 OF 8

APPROVED: 2-28-2017
REVISED:

TEMPORARY SEDIMENT CONTROL

STABILIZED CONSTRUCTION EXIT

STATE PROJ. NO. 0208-166 (T.H.65) SHEET NO. 27 OF 109 SHEETS

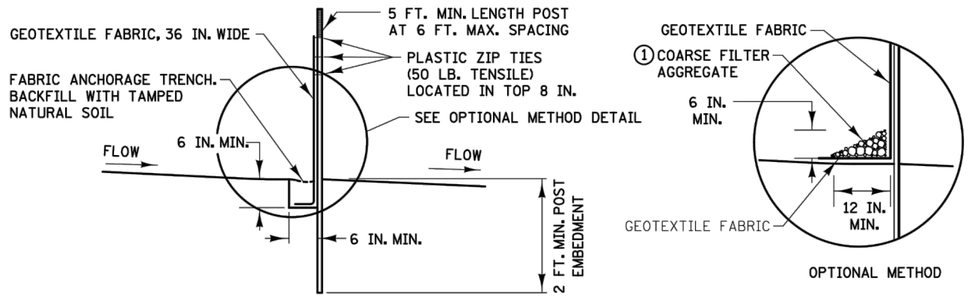

SILT FENCE TYPE HI ②
(HAND INSTALLED)

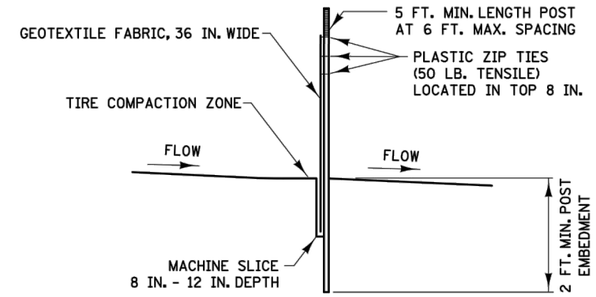

SILT FENCE TYPE MS ②
(MACHINE SLICED)

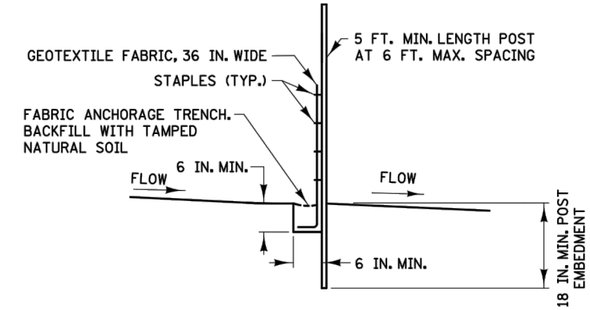

SILT FENCE TYPE PA ③
(PREASSEMBLED)

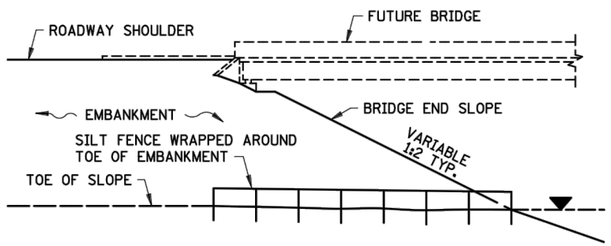

SILT FENCE ONLY ④

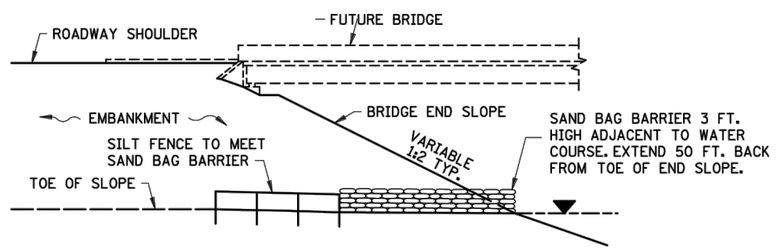

SILT FENCE WITH SAND BAGS ⑤

INSTALLATION AT BRIDGE EMBANKMENT ADJACENT TO WATER

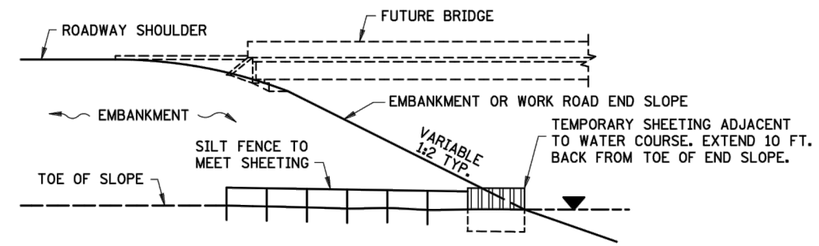

SILT FENCE WITH SHEETING ⑥

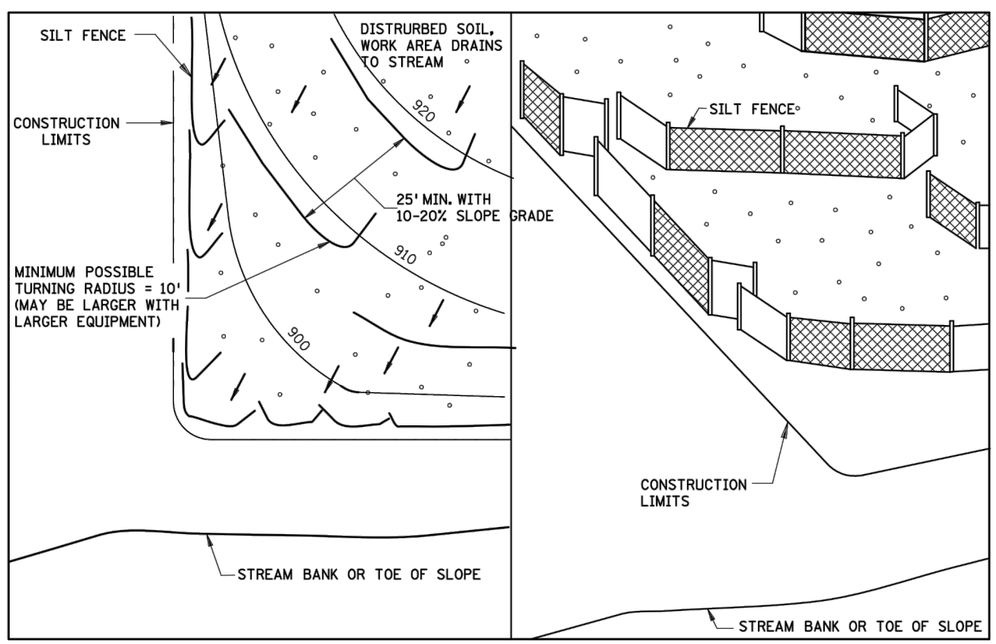

PLAN VIEW

PERSPECTIVE VIEW

J-HOOK INSTALLATION

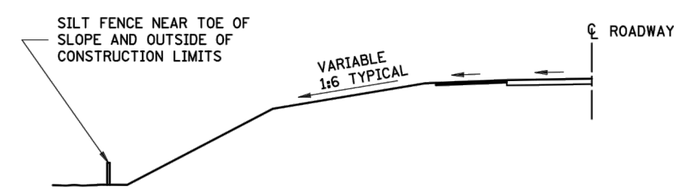

LOCATION AT TOE OF ROADWAY EMBANKMENT

NOTES:

SEE SPECS. 2573, 3149 & 3886.

① COARSE FILTER AGGREGATE (SPEC. 3149) SHALL BE INCIDENTAL.

② TO PROTECT AREAS FROM SHEET FLOW. MAXIMUM CONTRIBUTING AREA: 1 ACRE.

③ TO PROTECT AREAS FROM SHEET FLOW. MAXIMUM CONTRIBUTING AREA: 0.25 ACRE.

④ WATER COURSE FLOW VELOCITY: STANDING.
CONTRIBUTING SLOPE AREA: 1./2 ACRE.

⑤ WATER COURSE FLOW VELOCITY: 1 TO 7 FT./SEC.
CONTRIBUTING SLOPE AREA: 1. ACRE.

⑥ WATER COURSE FLOW VELOCITY: 8 TO 15 FT./SEC.
CONTRIBUTING SLOPE AREA: 3 ACRES.

REVISION:

APPROVED: 2-28-2017
CHIEF ENVIRONMENTAL OFFICER

MINNESOTA DEPARTMENT OF TRANSPORTATION

STANDARD PLAN 5-297.405 | 6 OF 8

APPROVED: 2-28-2017
REVISED:

STATE DESIGN ENGINEER

TEMPORARY SEDIMENT CONTROL

SILT FENCE

STATE PROJ. NO. 0208-166 (T.H.65) SHEET NO. 28 OF 109 SHEETS

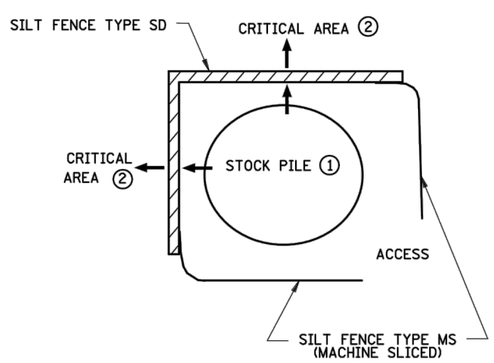

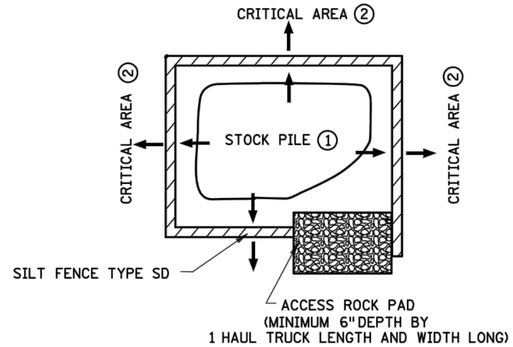

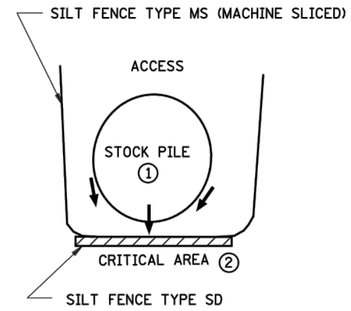

STOCK PILE CONTAINMENT

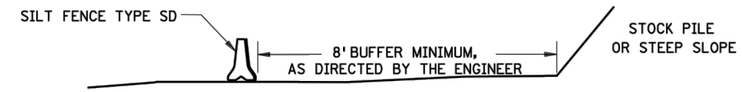

STOCKPILE SEDIMENT CONTROL

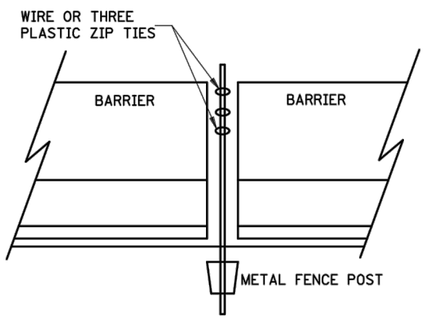

PROFILE VIEW

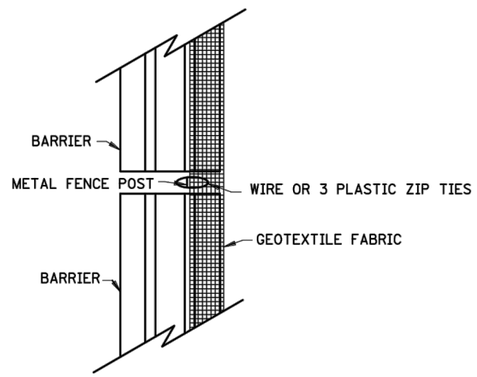

TOP VIEW

SILT FENCE TYPE SD (SUPER DUTY)
BARRIER WITHOUT LOOP BARS

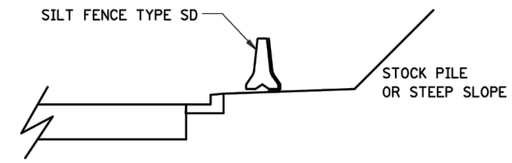

CURB AND GUTTER PROTECTION SYSTEM

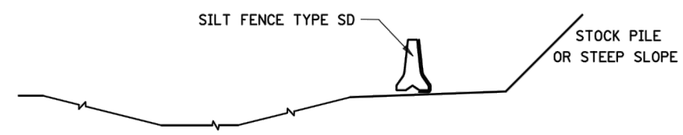

DITCH PROTECTION SYSTEM

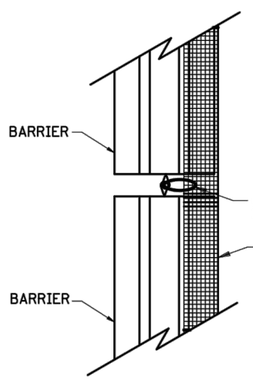

TOP VIEW

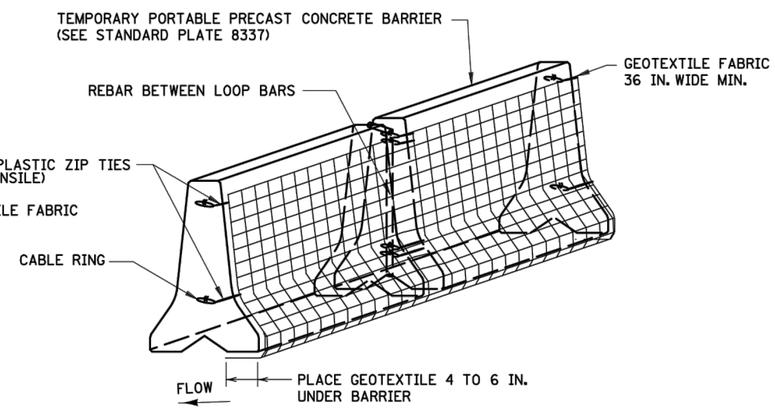

PERSPECTIVE VIEW

SILT FENCE TYPE SD (SUPER DUTY)
BARRIER WITH LOOP BARS

NOTES:

SEE SPECS. 2533, 2573 & 3886.

SILT FENCE TYPE SD USED TO PROTECT CRITICAL AREAS FROM SHEET FLOW, AND AREAS WHERE OTHER SILT FENCES CANNOT BE PLACED. MAXIMUM CONTRIBUTING AREA: 1 ACRE.

PLACE SILT FENCE TYPE SD ALONG A CONSTANT ELEVATION.

SILT FENCE TYPE SD CAN UTILIZE EITHER A CONCRETE, OR WATER FILLED, TEMPORARY MEDIAN BARRIER.

① PLACING STOCK PILES NEXT TO AN ENVIRONMENTALLY SENSITIVE AREA IS NOT RECOMMENDED. WHEN THERE ARE NO FEASIBLE ALTERNATIVES, PLACE SILT FENCE SD AS SHOWN OR AS DIRECTED BY THE ENGINEER.

② CRITICAL AREAS INCLUDE WETLANDS, JUDICIAL DITCHES, STREAMS, WATER BODIES, AND OTHER AREAS REQUIRING PROTECTION.

REVISION:

APPROVED: 2-28-2017

CHIEF ENVIRONMENTAL OFFICER

MINNESOTA DEPARTMENT OF TRANSPORTATION

STATE DESIGN ENGINEER

STANDARD PLAN 5-297.405	7 OF 8	TEMPORARY SEDIMENT CONTROL
APPROVED: 2-28-2017 REVISED:		SUPER DUTY SILT FENCE
STATE PROJ. NO. 0208-166 (T.H.65)	SHEET NO. 29 OF 109 SHEETS	

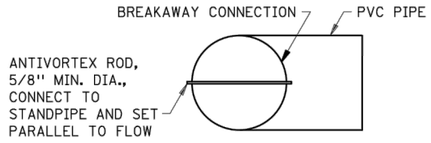

PLAN VIEW

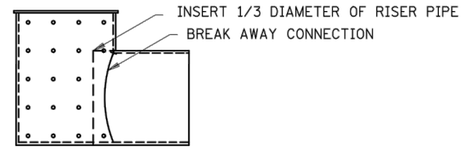

CULVERT STANDPIPE

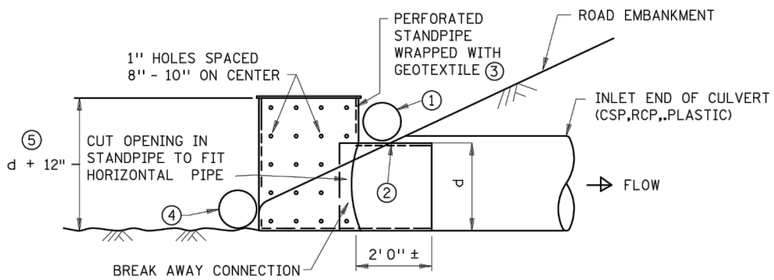

ELEVATION VIEW OF CULVERT INSTALLATION

CULVERT STANDPIPE INSERT (D-RISER)

d= CULVERT SIZE: 12" - 36"

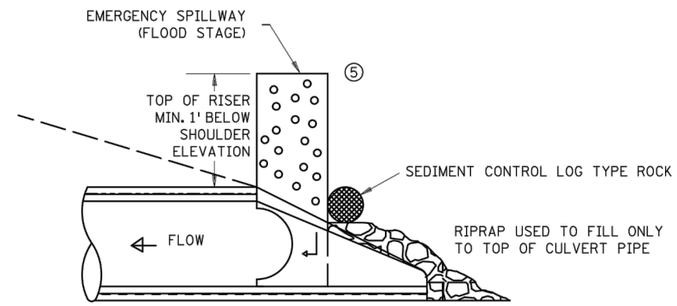

LONGITUDINAL SECTION

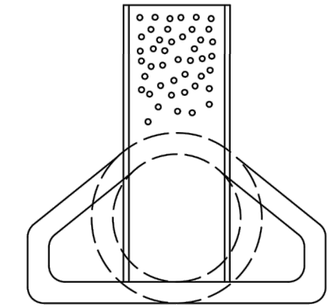

END VIEW

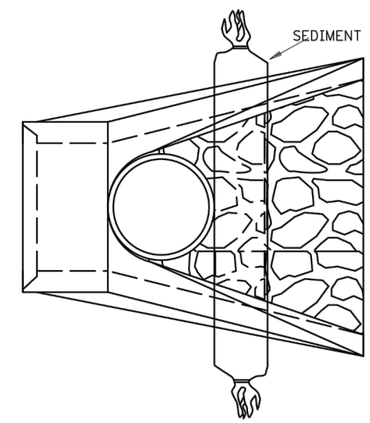

NOTE: SEDIMENT CONTROL LOG TYPE ROCK MAY BE WRAPPED AROUND RISER

TOP VIEW

CULVERT STANDPIPE INSERT (D-RISER)

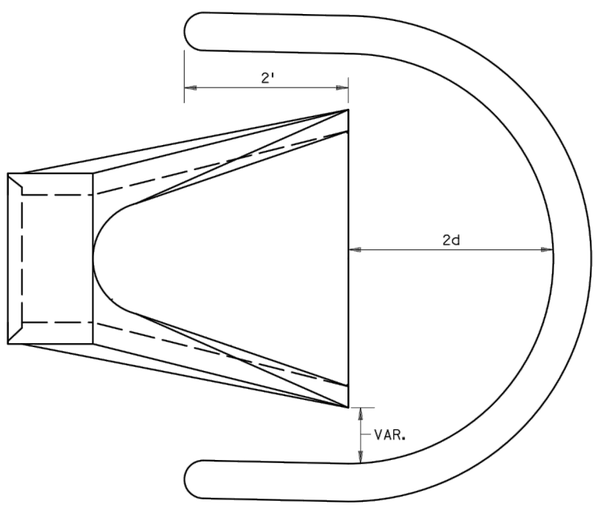

SEDIMENT CONTROL LOG WEIR (COMPOST, WOOD CHIP, OR ROCK)

d = CULVERT SIZE: 12"-36"

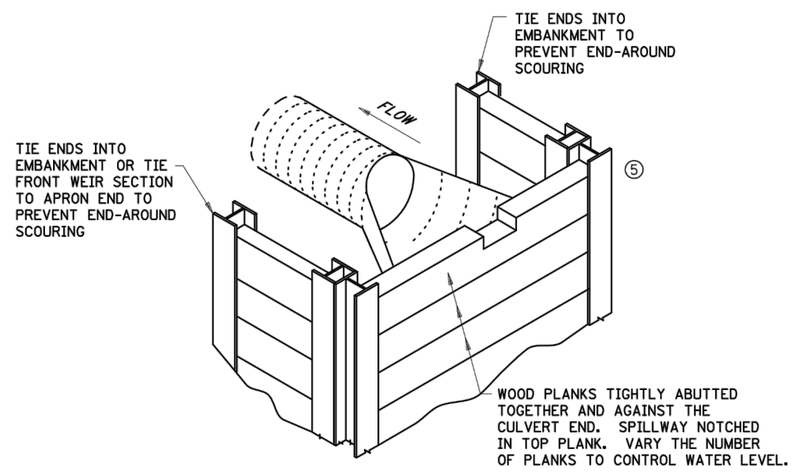

WOOD PLANK WEIR

NOTES:

SEE SPECS. 2573, 3891 & 3893.

FOR USE WHEN TEMPORARY PONDING IS NEEDED IN DITCH SECTIONS FOR SEDIMENT CONTROL.

MANUFACTURED ALTERNATIVES LISTED ON MnDOT'S APPROVED PRODUCTS LIST MAY BE SUBSTITUTED AT NO ADDITIONAL COST.

① ROCK LOG OR SANDBAG TO HOLD STANDPIPE AND ACT AS A SEAL BETWEEN RISER PIPE AND CULVERT.

② PLACE CULVERT APRON AND SLIDE TEMPORARY STANDPIPE INTO CSP OR RCP CULVERT.

③ ALL GEOTEXTILE USED FOR CULVERT PROTECTION SHALL BE MONOFILAMENT IN BOTH DIRECTIONS, MEETING SPEC. 3886 FOR MACHINE SLICED.

④ ROCK LOG OR RIP RAP TO HOLD STANDPIPE AND ACT AS A FILTER BETWEEN RISER PIPE AND CULVERT.

⑤ HEIGHT OVERFLOW NOT TO CAUSE FLOODING OF ROAD OR ADJACENT PROPERTIES.

REVISION:

APPROVED: 2-28-2017

CHIEF ENVIRONMENTAL OFFICER

MINNESOTA DEPARTMENT OF TRANSPORTATION

STATE DESIGN ENGINEER

STANDARD PLAN 5-297.405 | 8 OF 8

APPROVED: 2-28-2017
REVISED:

TEMPORARY SEDIMENT CONTROL

CULVERT END CONTROLS

STATE PROJ. NO. 0208-166 (T.H.65) SHEET NO. 30 OF 109 SHEETS

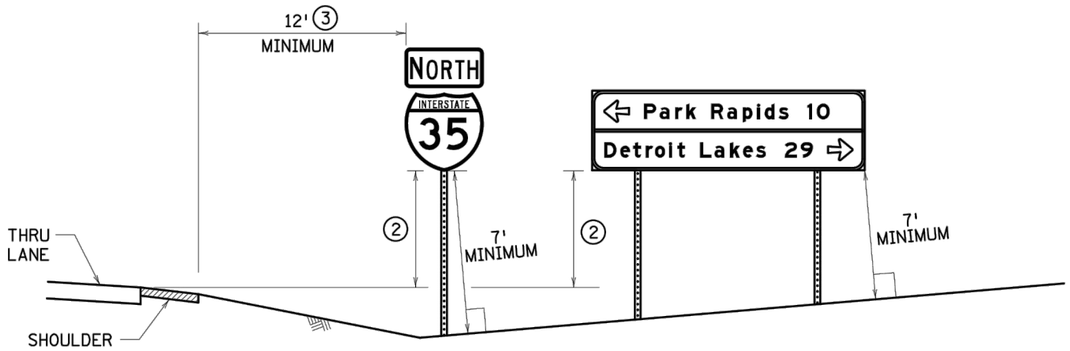

RURAL LOCATIONS

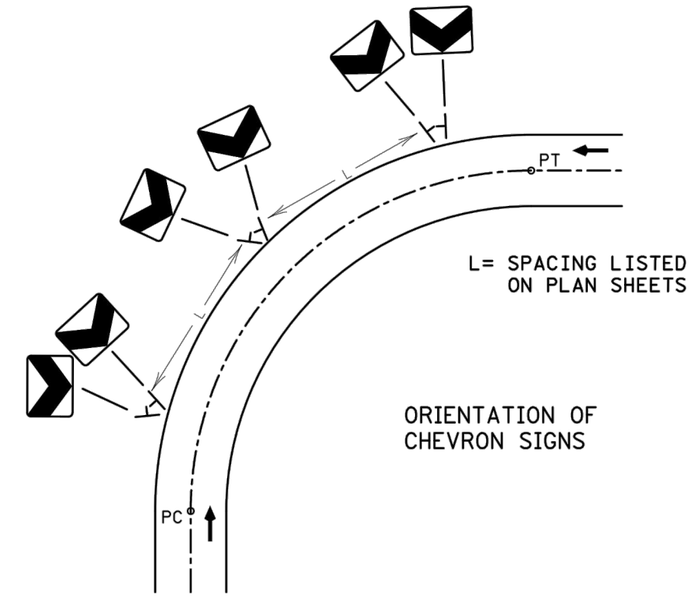

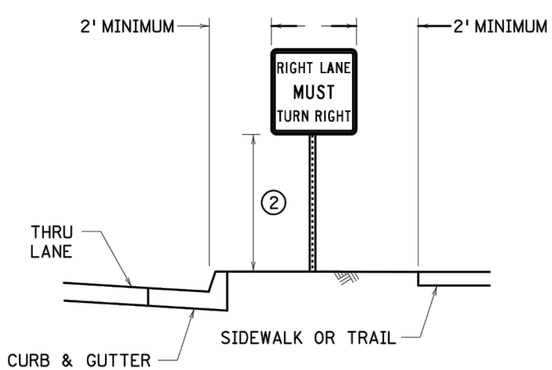

URBAN LOCATIONS

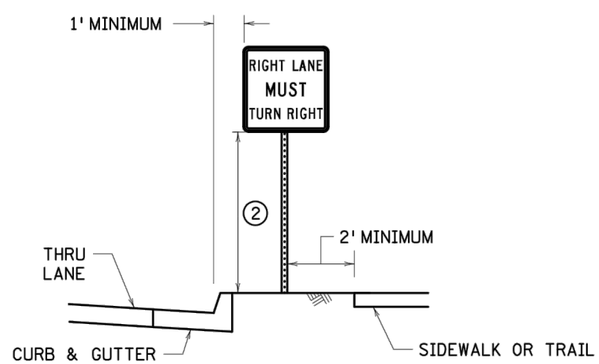

NARROW URBAN LOCATIONS ①

NOTES:

URBAN LOCATIONS ARE PAVEMENT SECTIONS WITH CURB AND GUTTER.

RURAL LOCATIONS ARE PAVEMENT SECTIONS WITHOUT CURB AND GUTTER.

SIGNS SHALL BE PLACED AND ORIENTED APPROXIMATELY AS SHOWN IN THE PLAN, AT RIGHT ANGLES TO THE DIRECTION OF, AND FACING, THE TRAFFIC THEY ARE INTENDED TO SERVE, UNLESS OTHERWISE SPECIFIED. TO AVOID SPECULAR GLARE, TURN SIGNS APPROXIMATELY THREE DEGREES AWAY FROM APPROACHING TRAFFIC.

IF A SIGN NEEDS TO BE REPOSITIONED FROM THE PROPOSED PLAN LOCATION IN ORDER TO AVOID CONFLICTS WITH UTILITIES OR OBSTACLES, CONTACT THE PROJECT ENGINEER.

SIGN FACES SHALL BE MOUNTED PLUMB.

LATERAL CLEARANCES GIVEN APPLY TO RIGHT AND/OR LEFT SIDE INSTALLATION.

SIGNS SHALL NOT BE ERECTED OR CONSTRUCTED SO AS TO CAUSE ANY PORTION OF THE SIGN TO BE WITHIN 8.5' OF THE CENTERLINE OF A RAILROAD TRACK.

SIGNS SHALL BE PLACED SUCH THAT OBSTACLES DO NOT BLOCK THEM FROM BEING VIEWED BY THE APPROACHING TRAFFIC.

SIGNS SHALL BE PLACED A MINIMUM OF 10' FROM THE NEAREST OBSTACLE. OBSTACLES MAY INCLUDE, BUT ARE NOT LIMITED TO, LIGHT POLES, TREES, SIGNS, AND BUILDINGS. SIGNS MAY BE PLACED CLOSER TO SIGNS IN TIGHT AREAS, BUT NO MORE THAN TWO POSTS IN A 7' DIAMETER CIRCLE.

① TO BE USED ONLY WHEN BOULEVARD IS TOO NARROW TO OBTAIN ADEQUATE URBAN LOCATION SIGN OFFSETS.

② ALL SIGN MOUNTING HEIGHTS ARE MEASURED VERTICALLY FROM THE BOTTOM OF THE SIGN TO THE TOP OF THE CURB, OR IN ABSENCE OF CURB, TO THE NEAR EDGE OF THE THRU-LANE PAVEMENT. SEE SIGN TABULATIONS.

③ MINIMUM MAY BE REDUCED TO 6' FROM SHOULDER AND 12' FROM THRU LANE IF SITE CONDITIONS PROHIBIT A 12' OFFSET FROM SHOULDER. IF ADEQUATE RIGHT OF WAY IS NOT AVAILABLE TO PLACE SIGN AT REDUCED MINIMUM, SIGN SHALL BE PLACED SUCH THAT PANEL EDGE IS 1' FROM RIGHT OF WAY AND NEAR PANEL EDGE IS AT LEAST 2' FROM EDGE OF SHOULDER.

REVISION:

APPROVED: OCTOBER 16, 2019

BRIAN SOBRINSON
STATE TRAFFIC ENGINEER

MINNESOTA DEPARTMENT OF TRANSPORTATION

STANDARD PLAN 5-297.701 | 1 OF 1

Peter A. Harff
PETER A. HARFF
STATE DESIGN ENGINEER

APPROVED: 10-16-2019
REVISED:

STANDARD SIGN PLACEMENT TYPE C & D

STATE PROJ. NO. 0208-166 (T.H.65) SHEET NO. 31 OF 109 SHEETS

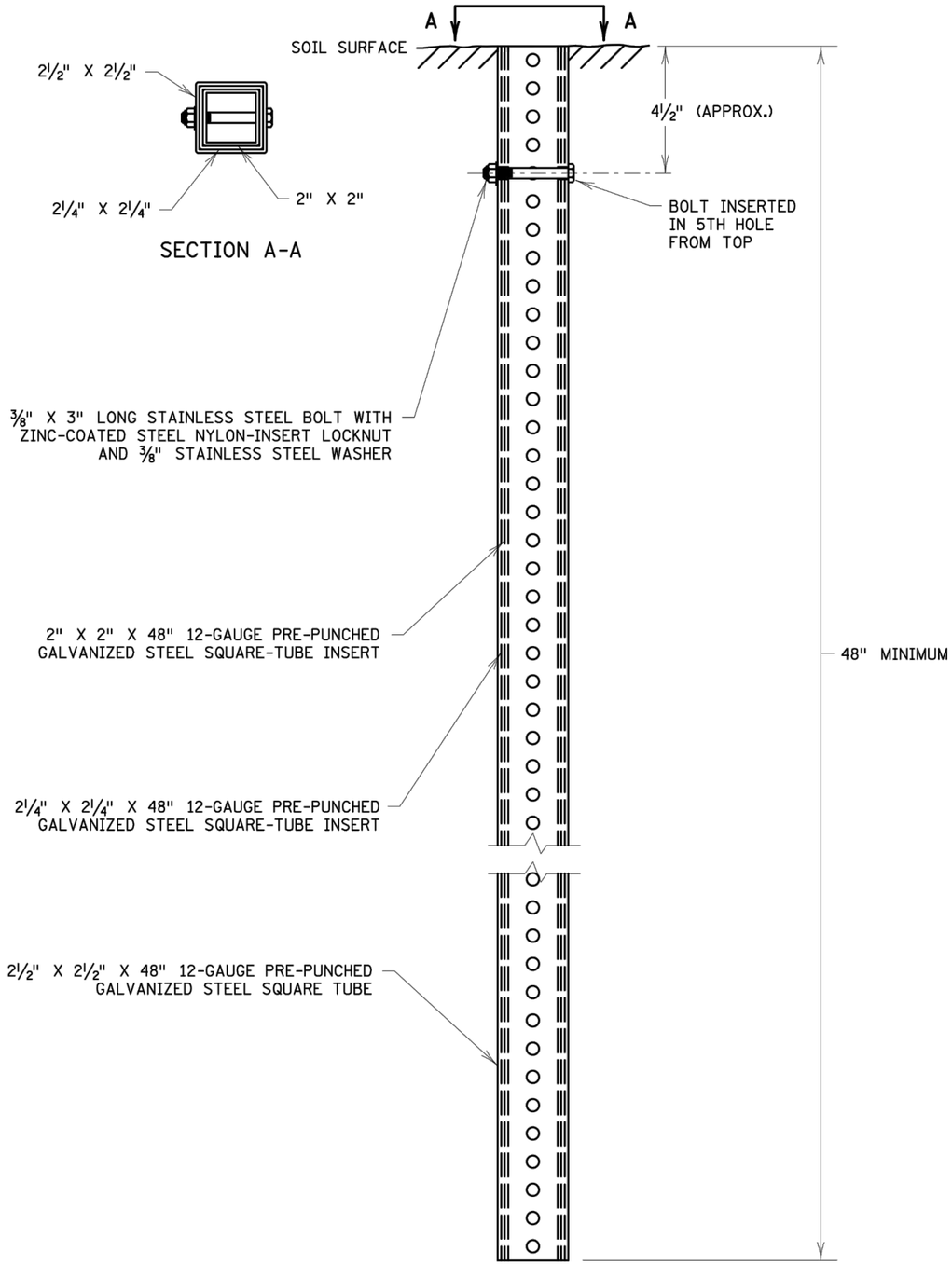

GROUND-MOUNT TUBING ASSEMBLY

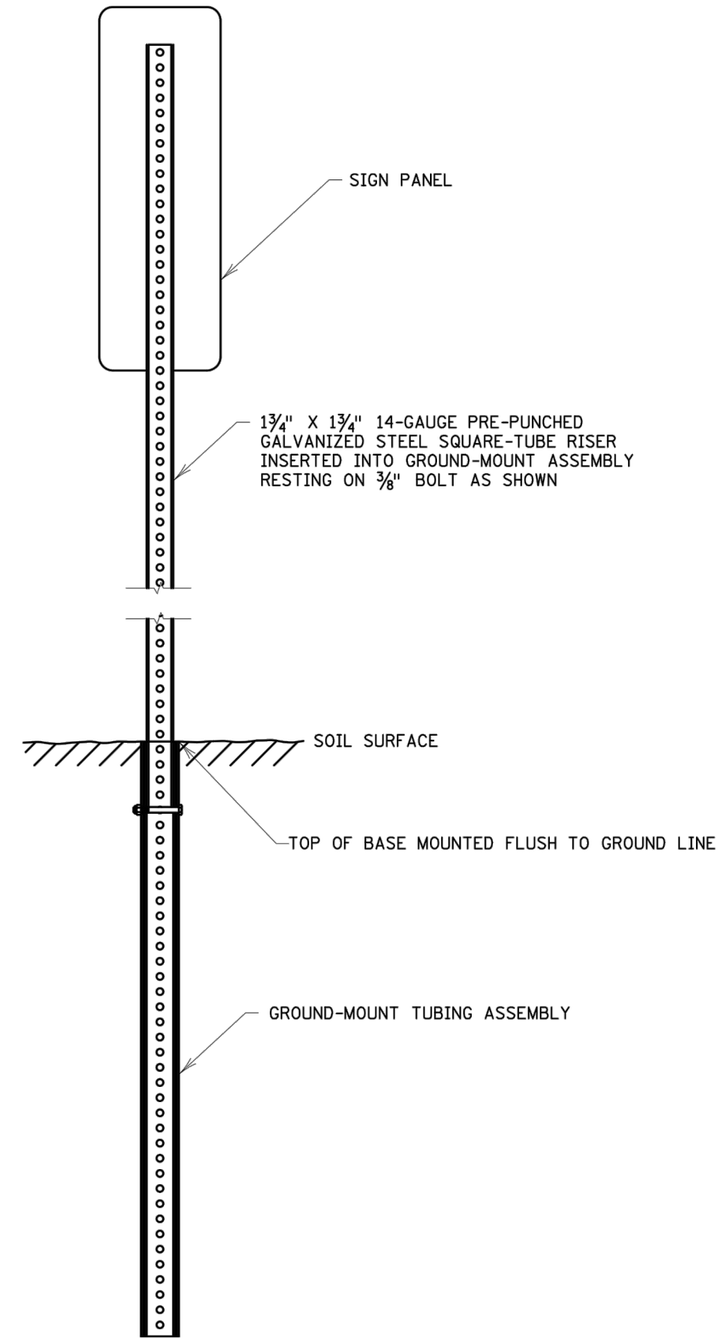

REVISION:

APPROVED: DECEMBER 9, 2019

BRIAN SOBENSON
STATE TRAFFIC ENGINEER

MINNESOTA DEPARTMENT OF TRANSPORTATION

STANDARD PLAN 5-297.721 | 1 OF 1

APPROVED: 12-9-2019
REVISED:

THOMAS STYRBICKI
STATE DESIGN ENGINEER

SQUARE-TUBE THREE-WALL SIGN BASE

STATE PROJ. NO. 0208-166 (T.H.65) SHEET NO. 32 OF 109 SHEETS

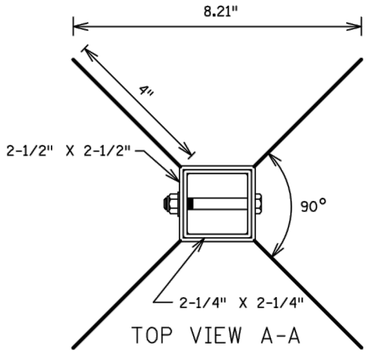

TOP VIEW A-A

SOIL STABILIZING FIN SHALL BE 4" x 10" x 12 GA PRE-GALVANIZED ASTM A569 STEEL. FINS SHALL BE WELDED TO EACH CORNER OF THE 2-1/2" SQUARE TUBE. WELDS MUST BE ZINC COATED.

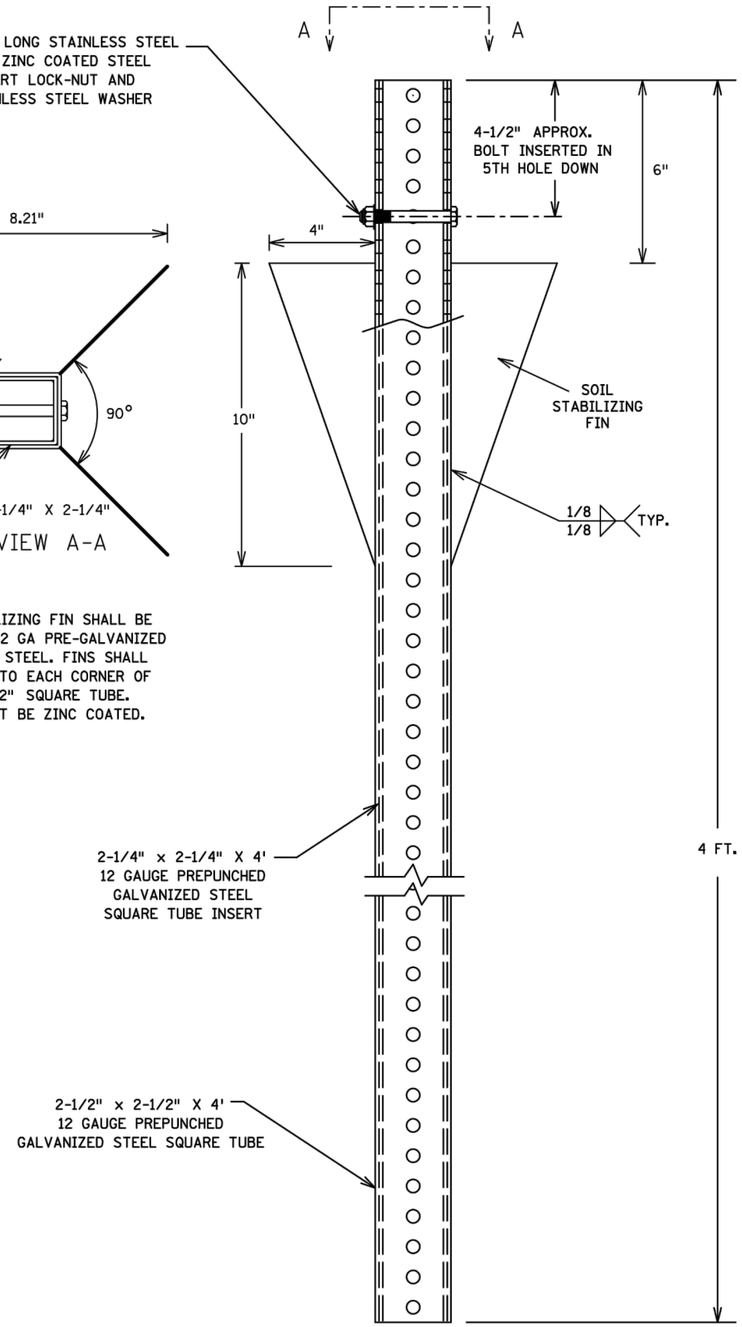

FIN BASE ASSEMBLY

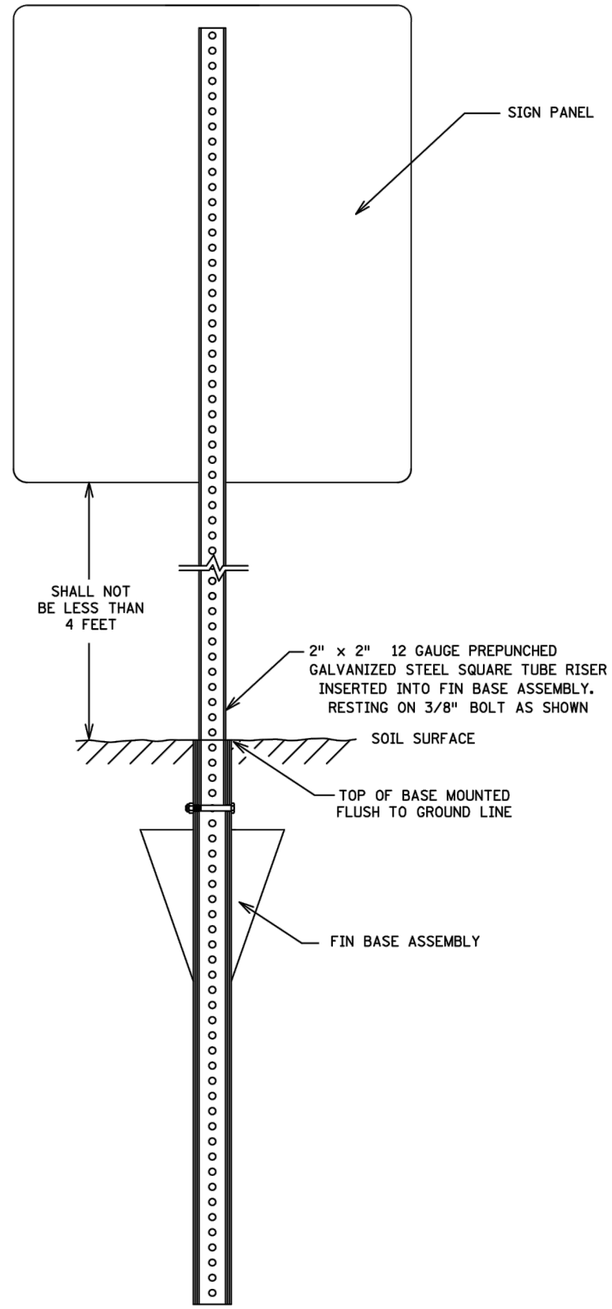

FIN BASE IN SOIL

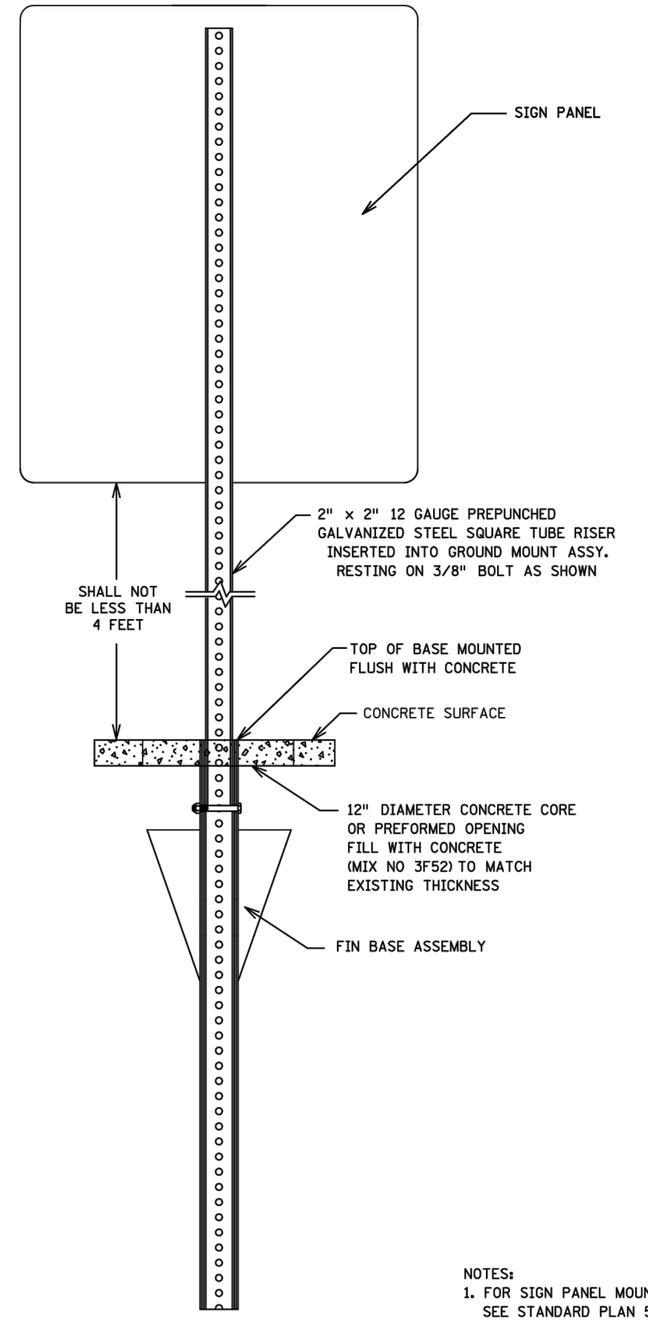

FIN BASE
IN CONCRETE

NOTES:
1. FOR SIGN PANEL MOUNTING DETAILS SEE STANDARD PLAN 5-297.720.
2. SQUARE TUBE SIGN POSTS PER MnDOT SPEC. 3402.

SQUARE TUBE FIN BASE

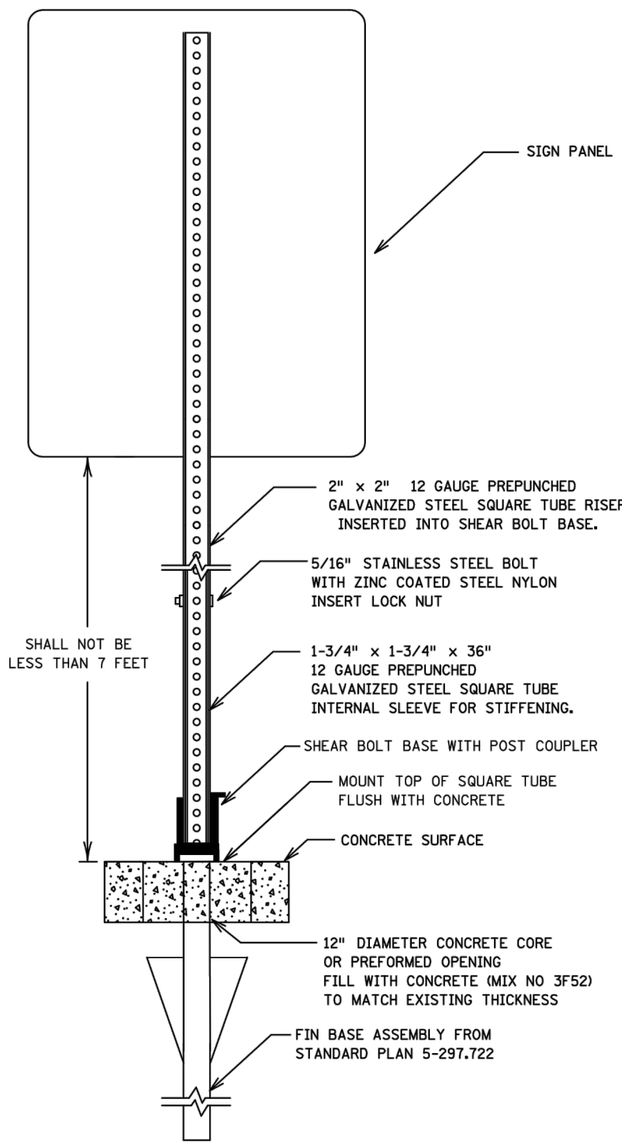

SHEAR BOLT BASE CORED THROUGH CONCRETE

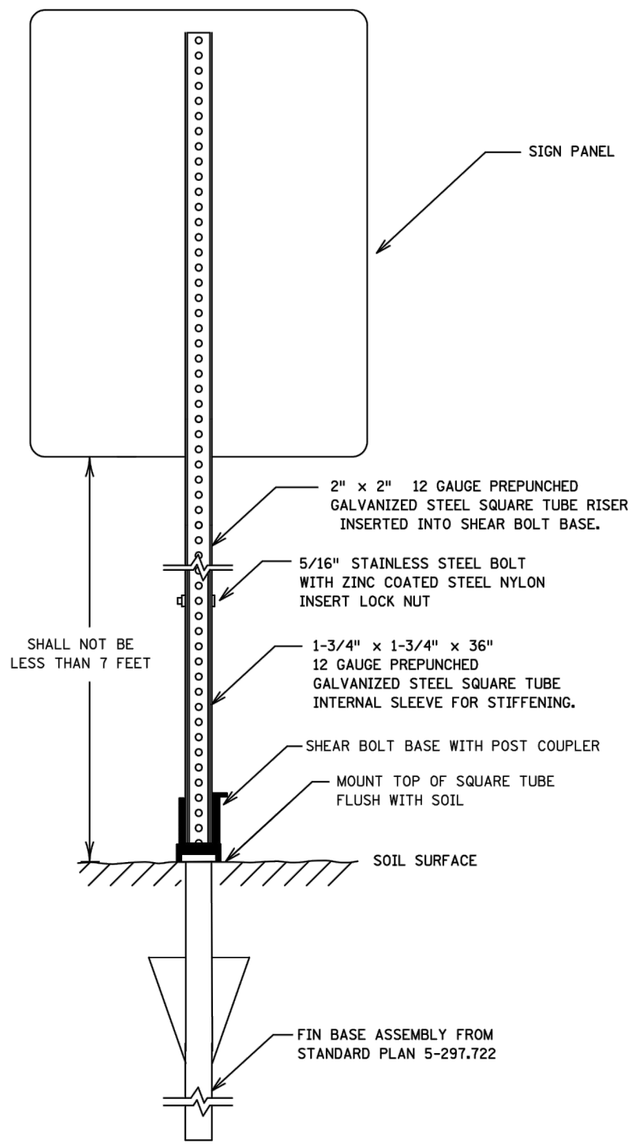

SHEAR BOLT BASE IN SOIL

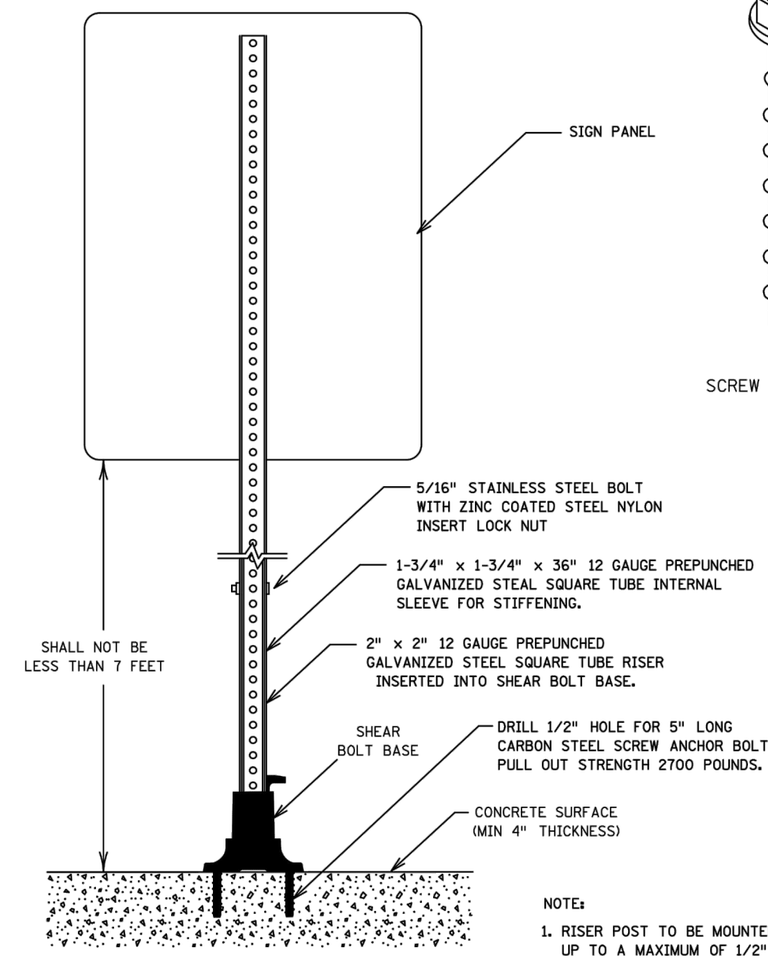

SHEAR BOLT BASE MOUNTED TO CONCRETE SURFACE

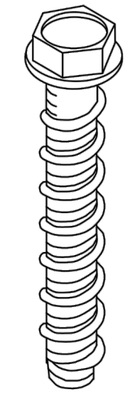

SCREW ANCHOR BOLT

NOTE:

1. RISER POST TO BE MOUNTED CLOSE TO PLUMB. UP TO A MAXIMUM OF 1/2" OF SHIM WASHERS MAY BE USED BETWEEN SHEAR BOLT BASE AND CONCRETE FOR LEVELING. IF MORE THAN 1/2" OF SHIMS ARE REQUIRED, THEN CORE THROUGH THE CONCRETE.
2. INSTALLATION OF SHEAR BOLT BASE SHALL BE NO EARLIER THAN 3 DAYS AFTER CONCRETE IS PLACED.
3. FOR SHEAR BOLT BASE USE APPROVED PRODUCT FROM MNDOT APPROVED PRODUCTS LIST, PRODUCT SHALL BE MODIFIED AS SHOWN.
4. USE ANTI SEIZE ON THE SHEAR BOLT CONNECTIONS.
5. FOR SIGN PANEL MOUNTING DETAILS SEE STANDARD PLAN 5-297.720.
6. SQUARE TUBE SIGN POSTS PER MnDOT SPEC. 3402.

SQUARE TUBE SHEAR BOLT BASE

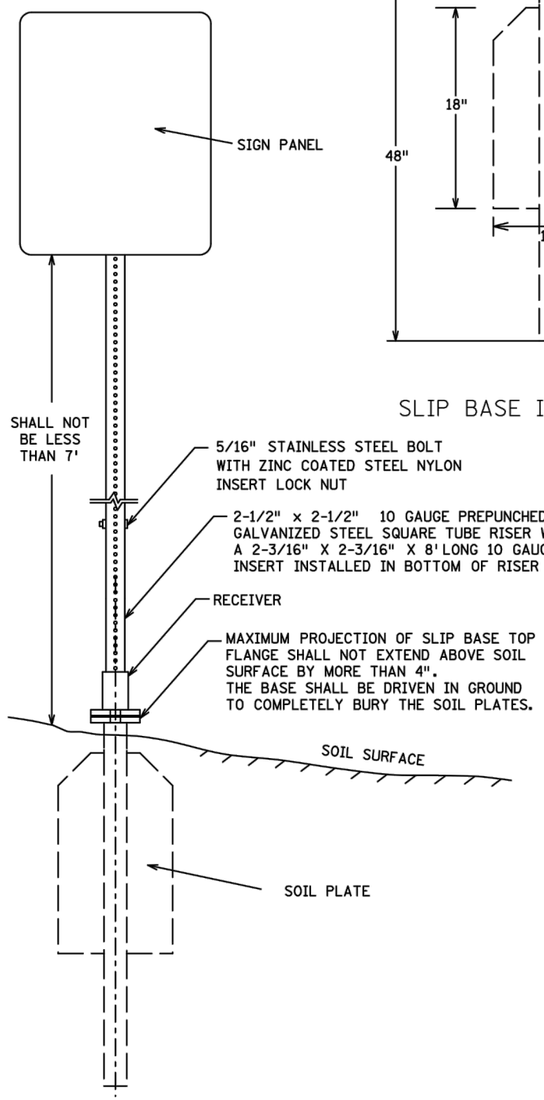

SLIP BASE
(TYPICAL PLACEMENT IN SOIL SHOWN)

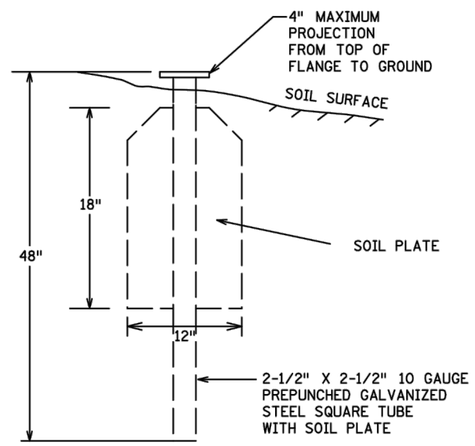

SLIP BASE IN SOIL DETAIL

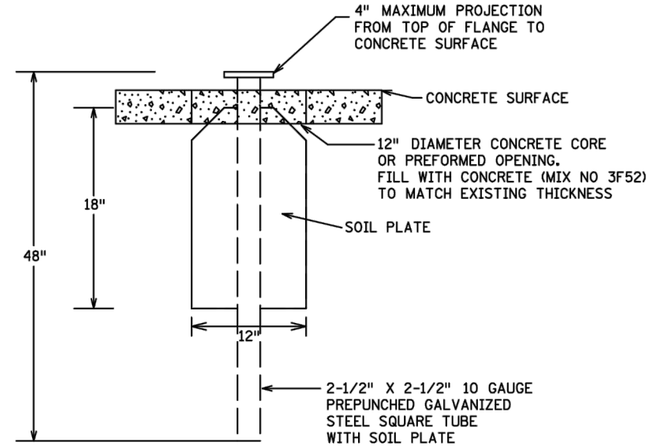

SLIP BASE CORED THROUGH CONCRETE DETAIL

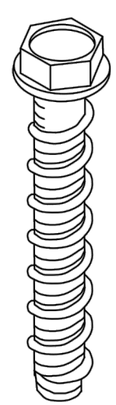

SCREW ANCHOR BOLT

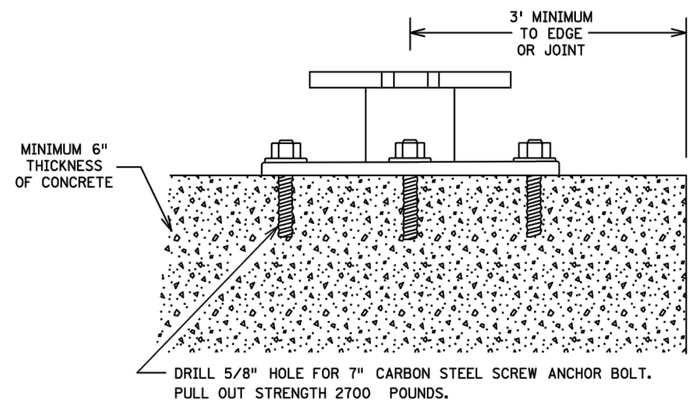

THE MINIMUM CONCRETE SURFACE REQUIRED FOR MOUNTING THE SLIP BASE IS 6 FEET BY 6 FEET.

SLIP BASE MOUNTED TO CONCRETE SURFACE DETAIL

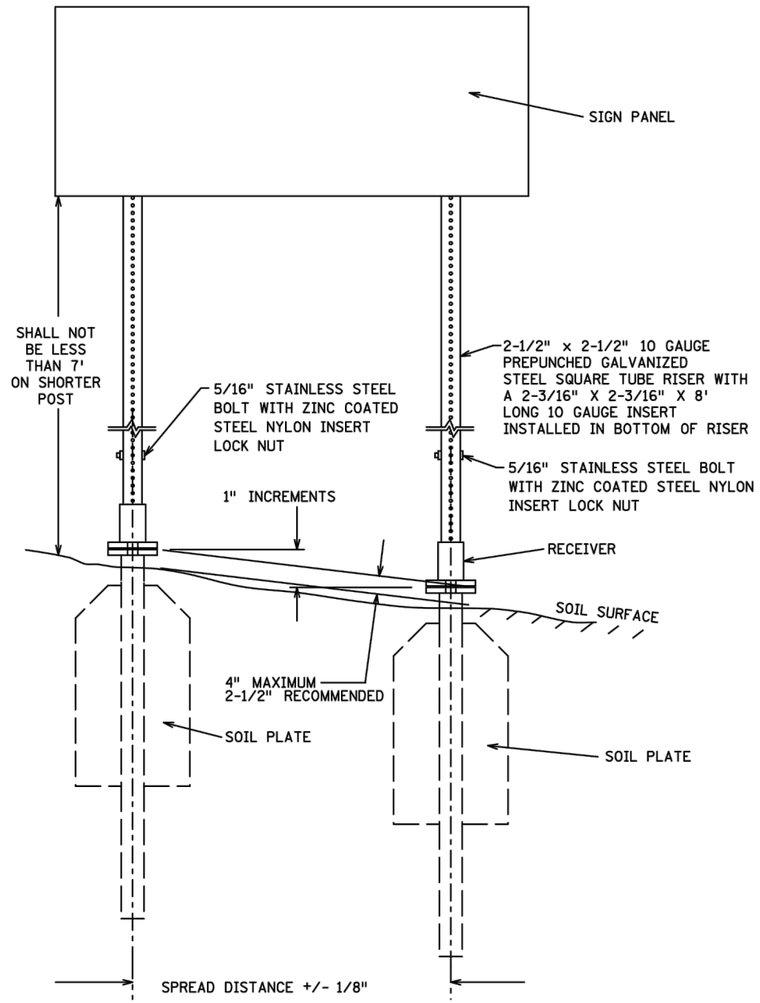

FOR MULTIPLE POST APPLICATIONS, ENSURE SOIL PLATES ARE COMPLETELY BURIED, IF SOIL SURFACE IS NOT LEVEL THE BASES SHALL BE DRIVEN IN UNTIL BASES ARE OFFSET IN 1 INCH INCREMENTS. THE BASES SHALL BE TRUE AND SQUARE WITH ONE ANOTHER TO ENSURE PROPER UNRESTRICTED INSERTION OF STEEL TUBE RISERS. SIGN PANELS SHALL BE MOUNTED LEVEL.

MULTIPLE POST SLIP BASE DETAIL

NOTES:

1. FOR SLIP BASE USE APPROVED PRODUCT FROM MNDOT APPROVED PRODUCTS LIST. PRODUCTS SHALL BE MODIFIED AS SHOWN.
2. RISER POST TO BE MOUNTED CLOSE TO PLUMB. UP TO A MAXIMUM OF 1/2" OF SHIM WASHERS MAY BE USED BETWEEN SLIP BASE AND CONCRETE FOR LEVELING.
3. 1/16" THICK LEVELING SHIMS MAY BE USED TO PLUMB TOP HALF. SHIMS NEED TO BE PLACED UNDER TEFLON COATED SLIP WASHER MAXIMUM OF 2 SHIMS PER NOTCH POINT.
4. FOR SIGN PANEL MOUNTING DETAILS SEE STANDARD PLAN 5-297.720.
5. SQUARE TUBE SIGN POST PER MnDOT SPEC. 3402.

SQUARE TUBE SLIP BASE

STATE PROJ. NO. 0208-166 (T.H.65) SHEET NO. 35 OF 109 SHEETS

PLOTTED/REVISED: 29-APR-2020
PLOT NAME: 5-297.724_DETAIL VERSION
PATH & FILENAME: OTST\Signing\Typicals\Standard Plans\5-297.724_DETAIL VERSION.dgn

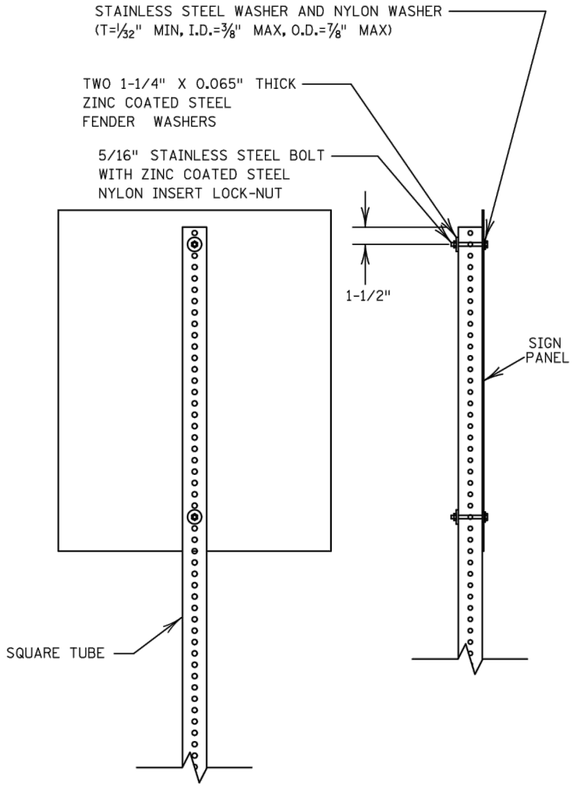

FOR SIGN PANELS UP TO 30" WIDE

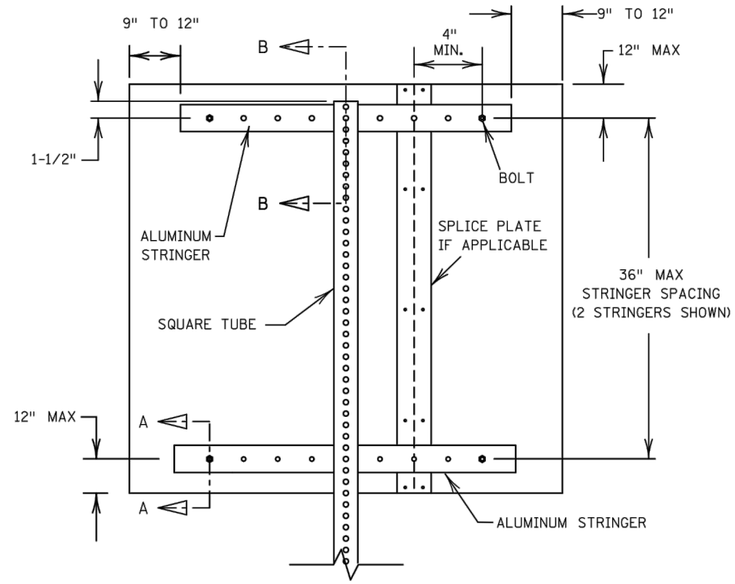

FOR SIGN PANELS 36" WIDE
OR GREATER ON ONE POST

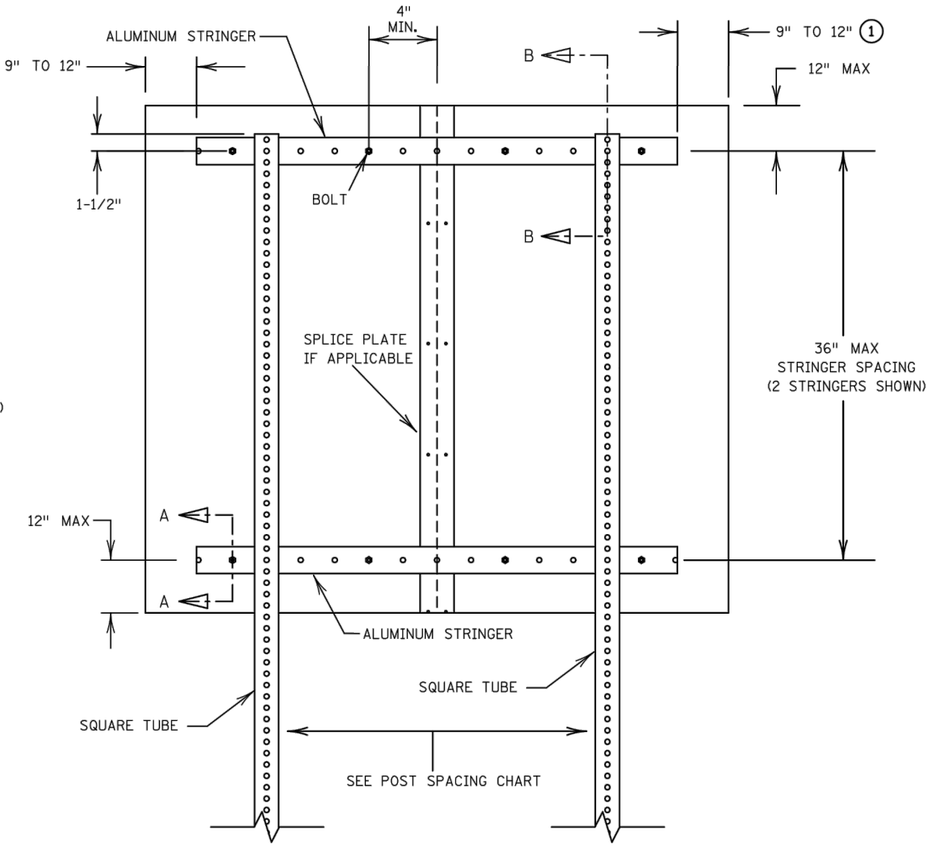

FOR SIGN PANELS ON TWO OR MORE POSTS

1 IF POST SPACING REQUIRES PLACEMENT OF A POST WITHIN THIS AREA, EXTEND STRINGERS AS NEEDED TO ACCOMMODATE THE STRINGER TO POST CLAMP.

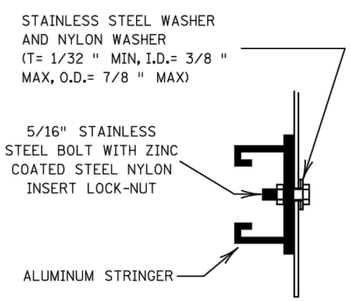

VIEW A-A

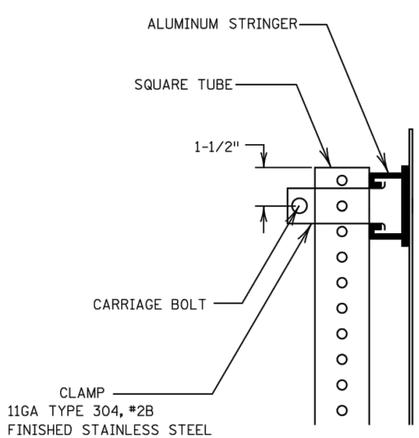

VIEW B-B

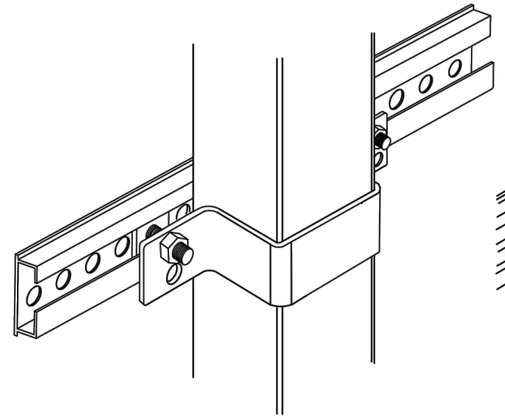

CLAMP DETAIL
4" SQUARE TUBE

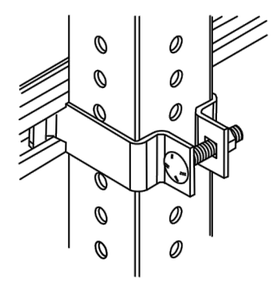

CLAMP DETAIL
2" AND 2 ½" SQUARE TUBE

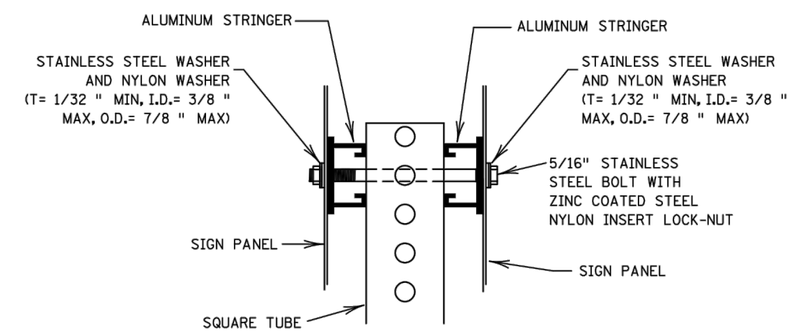

BACK TO BACK
SIGN MOUNTING WITH STRINGERS

NOTES:
1. BOLT SIGN PANELS TO STRINGERS OR RISER POSTS AT NO GREATER THAN 24 INCH SPACING.
   SEE THE MNDOT STANDARD SIGNS AND MARKINGS MANUAL FOR MOUNTING HOLES (PUNCH CODES) INFORMATION.
2. STRINGERS SHALL BE CENTERED ON SIGN PANEL.

SQUARE TUBE
SIGN MOUNTING DETAILS

1 OF 3

STATE PROJ. NO. 0208-166 (T.H.65) SHEET NO. 36 OF 109 SHEETS

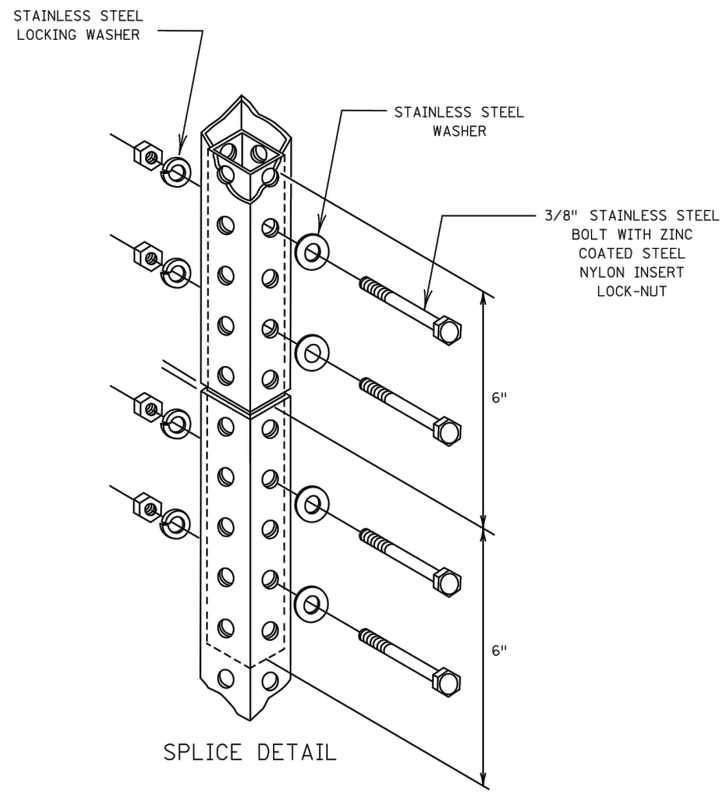

SPLICE DETAIL

NO MORE THAN ONE SPLICE PER POST.

WHEN USED MUST BE PLACED AT LEAST 8 FEET ABOVE GROUND. THE PREFERRED PLACEMENT LOCATION IS BEHIND THE SIGN PANEL.

INTERIOR POST STUD SHALL BE ONE SIZE SMALLER FOR A TIGHT FIT. IF RISER POST IS 2-1/2", INTERIOR POST IS 2-3/16". IF RISER POST IS 2", INTERIOR POST IS 1-3/4".

PANEL WIDTH	SQUARE TUBE POST SPACING						
	2 POSTS	3 POSTS	4 POSTS	5 POSTS	6 POSTS	7 POSTS	8 POSTS
(IN)	(IN)	(IN)	(IN)	(IN)	(IN)	(IN)	(IN)
24	12						
30	12						
36	12						
42	18						
48	24						
54	30						
60	36						
66	36						
72	42						
78	42						
84	48						
90	48	42					
96	48	42					
102	54	42					
108	54	42					
114	60	42					
120	60	48					
126	66	48					
132	66	48	42				
138	72	48	42				
144	72	48	42				
150	78	54	42				
156	78	54	42				
162	84	54	42				
168	84	60	48				
174	90	60	48	42			
180	90	60	48	42			
186	96	66	48	42			
192	96	66	48	42			
198	102	66	54	42			
204	102	72	54	42			
210	108	72	54	42			
216	108	72	54	48	42		
222	114	78	60	48	42		
228	114	78	60	48	42		
234	120	78	60	48	42		
240	120	84	60	48	42		
246		84	66	54	42		
252		84	66	54	42		
258		90	66	54	42	42	
264		90	66	54	48	42	
270		90	72	54	48	42	
276		96	72	60	48	42	
282		96	72	60	48	42	
288		96	72	60	48	42	
294		102	78	60	54	42	
300		102	78	60	54	42	42
306		102	78	66	54	42	42
312		108	78	66	54	48	42
318		108	84	66	54	48	42
324		108	84	66	54	48	42
330		114	84	66	60	48	42
336		114	84	72	60	48	42

DISTANCES ARE CENTER-TO-CENTER OF POSTS

SQUARE TUBE
SIGN MOUNTING DETAILS

2 OF 3

STATE PROJ. NO. 0208-166 (T.H.65) SHEET NO. 37 OF 109 SHEETS

PLOTTED/REVISED: 3-MAR-2020
PLOT NAME: 5-297.720_DETAIL VERSION_
PATH & FILENAME: OTST\Signing\Typicals\Standard Plans\5-297.720_DETAIL VERSION_.dgn

NUMBER OF STRINGERS FOR 4 INCH POSTS

PANEL HEIGHT (INCHES)	12	18	24	30	36	42	48	54	60	66	72	78	84	90	96	102	108	114	120	126	132	138	144	150	156	162	168	174	180	186	192	198	204	210	216	222	228	234	240	246	252	258	264	270	276	282	288	294	300	306	312	318	324	330	336
144			5	5	5	5	5	6	6	5	5	5	5	5	5	6	6	6	6	7	5	5	5	5	6	6	6	6	6	7	5	5	6	6	6	6	6	6	6	7	7															
138			5	5	5	5	5	6	6	7	5	5	5	5	5	5	6	6	6	7	7	5	5	5	5	6	6	6	6	6	7	7	5	6	6	6	6	6	6	6	7	7	7													
132			4	4	4	4	5	5	6	7	4	4	4	5	5	5	5	6	6	6	7	7	5	5	5	5	6	6	6	6	6	7	7	7	5	6	6	6	6	6	6	6	7	7	7	7									
126				4	4	4	5	5	6	6	7	4	4	4	5	5	5	5	6	6	6	7	7	7	5	5	5	6	6	6	6	6	6	7	7	7	5	6	6	6	6	6	6	6	7	7	7	7	7						
120				4	4	4	4	5	5	6	6	7	4	4	4	5	5	5	5	6	6	6	6	7	7	5	5	5	5	6	6	6	6	6	6	7	7	7	7	6	6	6	6	6	6	6	7	7	7	7					
114					4	4	4	5	5	6	6	7	7	4	4	5	5	5	5	5	6	6	6	6	7	7	7	5	5	5	6	6	6	6	6	6	7	7	7	7	7	7	6	6	6	6	6	6	7	7	7	7	7	7
108					4	4	4	5	5	5	6	6	7	7	4	4	5	5	5	5	5	6	6	6	6	7	7	7	7	5	5	5	6	6	6	6	6	6	6	7	7	7	7	7	7	6	6	6	6	6	6	7	7	7
102						4	4	4	5	5	6	6	6	7	7	4	4	5	5	5	5	5	6	6	6	6	6	7	7	7	7	8	5	5	6	6	6	6	6	6	6	7	7	7	7	7	7	6	6	6	6	6	6	6
96						3	4	4	4	5	5	6	6	6	7	7	8	4	4	5	5	5	5	5	6	6	6	6	6	7	7	7	7	7	8	5	6	6	6	6	6	6	7	7	7	7	7	7	7	8	8	6	6
90						3	3	4	4	5	5	5	6	6	6	7	7	8	4	4	5	5	5	5	5	6	6	6	6	6	6	7	7	7	7	7	8	8	5	6	6	6	6	6	6	6	7	7	7	7	7	7	7
84							3	4	4	4	5	5	5	6	6	6	7	7	7	4	4	5	5	5	5	5	6	6	6	6	6	6	7	7	7	7	7	7	7	5	5	6	6	6	6	6	6	6	6	7	7	7	7	7
78							3	3	4	4	4	5	5	5	6	6	6	7	7	4	4	4	4	5	5	5	5	5	5	6	6	6	6	6	6	7	7	7	7	5	5	5	5	5	5	6	6	6	6	6	6	6	6	7
72								3	3	4	4	4	5	5	5	6	6	6	6	4	4	4	4	4	4	5	5	5	5	5	5	5	6	6	6	6	6	6	6	5	5	5	5	5	5	5	5	5	6	6	6	6	6	6
66									3	4	4	4	4	5	5	5	5	6	6	3	4	4	4	4	4	4	4	4	5	5	5	5	5	5	5	6	6	6	6	4	4	4	5	5	5	5	5	5	5	5	5	5	6	6
60										3	3	4	4	4	4	5	5	5	5	3	3	3	3	4	4	4	4	4	4	4	4	5	5	5	5	5	5	5	5	4	4	4	4	4	4	4	4	5	5	5	5	5	5	5
54										3	3	3	4	4	4	4	5	5	5	3	3	3	3	3	3	4	4	4	4	4	4	4	4	4	5	5	5	5	5	4	4	4	4	4	4	4	4	4	4	4	4	5	5	5
48										3	3	3	3	3	4	4	4	4	4	3	3	3	3	3	3	3	3	3	3	4	4	4	4	4	4	4	4	4	4	3	3	3	3	3	4	4	4	4	4	4	4	4	4	4
42										2	3	3	3	3	3	3	4	4	4	2	2	3	3	3	3	3	3	3	3	3	3	3	3	3	4	4	4	4	4	3	3	3	3	3	3	3	3	3	3	3	4	4	4	4
36										2	2	2	3	3	3	3	3	3	3	2	2	2	2	2	2	3	3	3	3	3	3	3	3	3	3	3	3	3	3	3	3	3	3	3	3	3	3	3	3	3	3	3	3	3
30										2	2	2	2	2	2	3	3	3	3	2	2	2	2	2	2	2	2	2	2	2	2	3	3	3	3	3	3	3	3	2	2	2	2	2	2	2	2	3	3	3	3	3	3	3
24										2	2	2	2	2	2	2	2	2	2	2	2	2	2	2	2	2	2	2	2	2	2	2	2	2	2	2	2	2	2	2	2	2	2	2	2	2	2	2	2	2	2	2	2	2
18										2	2	2	2	2	2	2	2	2	2	1	1	1	1	1	1	2	2	2	2	2	2	2	2	2	2	2	2	2	2	2	2	2	2	2	2	2	2	2	2	2	2	2	2	2
12										2	2	2	2	2	2	2	2	2	2	1	1	1	1	1	1	1	1	1	1	1	1	1	1	1	1	1	1	1	1	1	1	1	1	1	1	1	1	1	1	1	1	1	1	1
	1 POST									1 POST										2 POST																																			

PANEL WIDTH (INCHES)

4 POST

NUMBER OF ALUMINUM STRINGERS FOR 2 1/2 INCH OR SMALLER POSTS

PANEL HEIGHT (INCHES)	12	18	24	30	36	42	48	54	60	66	72	78	84	90	96	102	108	114	120	126	132	138	144	150	156	162	168	174	180	186	192	198	204	210	216	222	228	234	240	246	252	258	264	270	276	282	288	294	300	306	312	318	324	330	336
120	0	0	0	4	4	4	4	4	4	4																																													
114	0	0	0	0	4	4	4	4	4	4	4			4																																									
108	0	0	0	0	4	4	4	4	4	4	4			4	4						4																																		
102	0	0	0	0	4	4	4	4	4	4	4	4		4	4	4					4	4						4																											
96	0	0	0	0	3	3	3	3	3	3	3	3	3	3	3	3	3				3	3	3	3				3	3						3																				
90	0	0	0	0	3	3	3	3	3	3	3	3	3	3	3	3	3	3			3	3	3	3	3			3	3	3	3				3	3	3	3																	
84	0	0	0	0	3	3	3	3	3	3	3	3	3	3	3	3	3	3	3	3	3	3	3	3	3	3		3	3	3	3	3	3	3	3	3	3	3	3	3																
78	0	0	0	0	3	3	3	3	3	3	3	3	3	3	3	3	3	3	3	3	3	3	3	3	3	3	3	3	3	3	3	3	3	3	3	3	3	3	3	3	3	3	3	3	3									
72	0	0	0	0	3	3	3	3	3	3	3	3	3	3	3	3	3	3	3	3	3	3	3	3	3	3	3	3	3	3	3	3	3	3	3	3	3	3	3	3	3	3	3	3	3	3	3	3	3	3	3				
66	0	0	0	0	3	3	3	3	3	3	3	3	3	3	3	3	3	3	3	3	3	3	3	3	3	3	3	3	3	3	3	3	3	3	3	3	3	3	3	3	3	3	3	3	3	3	3	3	3	3	3	3	3	3	3
60	0	0	0	0	2	2	2	3	3	2	2	2	2	2	2	3	3	3	3	2	2	2	2	3	3	3	3	3	3	2	2	3	3	3	3	3	3	3	3	3	3	3	3	3	3	3	3	3	3	3	3	3	3	3	3
54	0	0	0	0	2	2	2	3	3	2	2	2	2	2	2	3	3	3	3	2	2	2	2	2	2	3	3	3	3	2	2	2	2	2	3	3	3	3	3	2	2	2	3	3	3	3	3	3	2	2	2	3	3	3
48	0	0	0	0	2	2	2	2	2	2	2	2	2	2	2	2	2	2	2	2	2	2	2	2	2	2	2	2	2	2	2	2	2	2	2	2	2	2	2	2	2	2	2	2	2	2	2	2	2	2	2	2	2	2	2
42	0	0	0	0	2	2	2	2	2	2	2	2	2	2	2	2	2	2	2	2	2	2	2	2	2	2	2	2	2	2	2	2	2	2	2	2	2	2	2	2	2	2	2	2	2	2	2	2	2	2	2	2	2	2	2
36	0	0	0	0	2	2	2	2	2	2	2	2	2	2	2	2	2	2	2	2	2	2	2	2	2	2	2	2	2	2	2	2	2	2	2	2	2	2	2	2	2	2	2	2	2	2	2	2	2	2	2	2	2	2	2
30	0	0	0	0	2	2	2	2	2	2	2	2	2	2	2	2	2	2	2	2	2	2	2	2	2	2	2	2	2	2	2	2	2	2	2	2	2	2	2	2	2	2	2	2	2	2	2	2	2	2	2	2	2	2	2
24	0	0	0	0	2	2	2	2	2	1	1	1	1	1	1	1	1	1	1	1	1	1	1	1	1	1	1	1	1	1	1	1	1	1	1	1	1	1	1	1	1	1	1	1	1	1	1	1	1	1	1	1	1	1	1
18	0	0	0	0	2	2	2	2	2	1	1	1	1	1	1	1	1	1	1	1	1	1	1	1	1	1	1	1	1	1	1	1	1	1	1	1	1	1	1	1	1	1	1	1	1	1	1	1	1	1	1	1	1	1	1
12	0	0	0	0	2	2	2	2	2	1	1	1	1	1	1	1	1	1	1	1	1	1	1	1	1	1	1	1	1	1	1	1	1	1	1	1	1	1		1	1	1	1	1	1	1	1	1	1	1	1	1	1	1	1
	1 POST									2 POST										3 POST										4 POST										5 POST										6 POST					

PANEL WIDTH (INCHES)

PLOTTED/REVISED: 3-MAR-2020

PLOT NAME: 5-297.720.DETAIL VERSION_
PATH & FILENAME: OTST\Signing\Typicals\Standard Plans\5-297.720_DETAIL VERSION_.dgn

SQUARE TUBE SIGN MOUNTING DETAILS

3 OF 3

STATE PROJ. NO. 0208-166 (T.H.65) SHEET NO. 38 OF 109 SHEETS

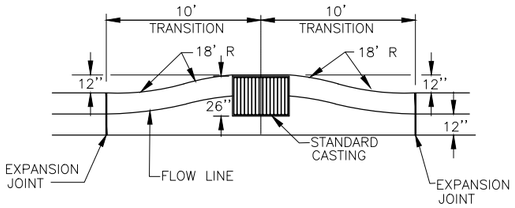

D412 CONCRETE
CURB AND GUTTER

1/39 CURB & GUTTER CONSTRUCTION AT CATCH BASIN ①

NO SCALE

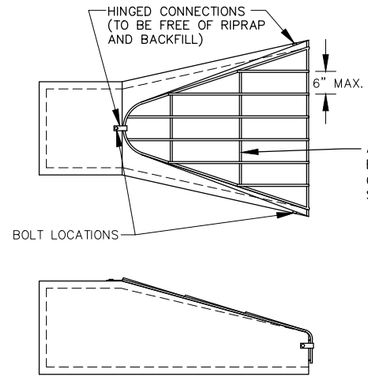

NOTE:
GUARDS MUST BE INCORPORATED ON ALL INSTALLATIONS EXCEPT WHERE SPECIFICALLY ALLOWED OTHERWISE BY THE ENGINEER.

ALL GUARDS SHALL HAVE (1) CROSS BAR, 60" DIAMETER PIPE AND GREATER SHALL HAVE (2) EQUALLY SPACED CROSS BARS.

	PIPE SIZE	BOLT DIA.	BAR SIZE
ROUND	12"–24"	5/8"	5/8"
	27"–48"	3/4"	3/4"
	54"–90"	1"	1"
ARCH	22"–29"	5/8"	5/8"
	36"–59"	3/4"	3/4"
	65"–88"	1"	1"

2/39 TRASH GUARD

N.T.S.

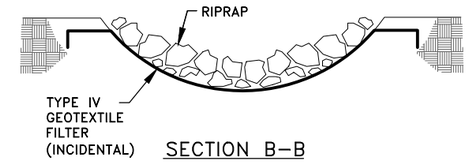

SECTION B–B

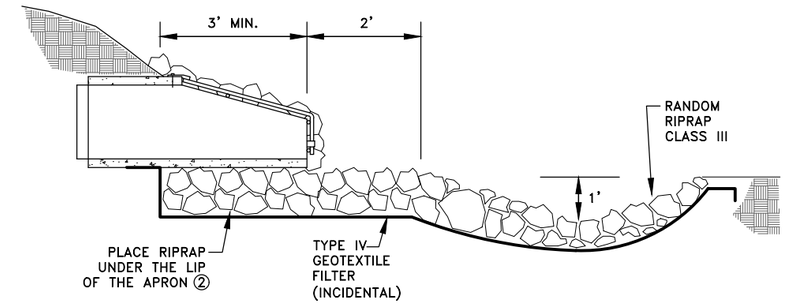

SECTION A–A

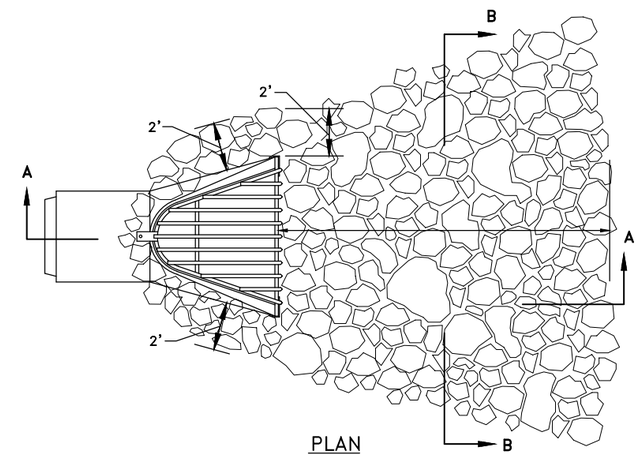

PLAN

3/39 RIPRAP PLACEMENT AT RCP OUTLETS

N.T.S.

REFERENCE NOTES:
① PERIMETER GROUT NOT SHOWN. SEE MN/DOT STANDARD PLATE 4026.
② RIPRAP MUST BE PLACED PRIOR TO APRON INSTALLATION.

Aug 19, 2020 – 1:09pm
K:\MUNICIPAL\EB351\ENGINEERING\EB351 DETAILS.dwg

DATE	REVISION

I hereby certify that this plan, specification, or report was prepared by me or under my direct supervision and that I am a duly Licensed Professional Engineer under the laws of the State of Minnesota.

CRAIG J. JOCHUM, P.E.
Date 8/7/20 Lic. No. 23461

DESIGNED BY: CJJ
DRAWN BY: SGJ
CHECKED BY: TAE

Hakanson Anderson
Civil Engineers and Land Surveyors
3601 Thurston Ave., Anoka, Minnesota 55303
763–427–5860 FAX 763–427–0520
www.hakanson–anderson.com

STATE PROJ. NO 0208–166 (TH65=005)
SAP 203–127–001, SAP 203–111–005,
SAP 203–113–003

DETAILS

TH 65 EAST SERVICE ROAD PROJECT

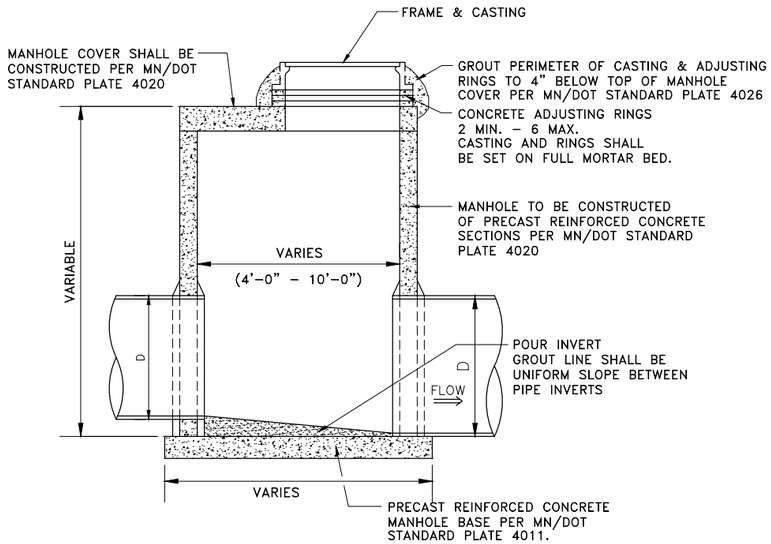

MANHOLE STEPS SHALL BE TYPICAL REINFORCED PLASTIC STEPS PER MN/DOT STANDARD PLATE 4180.

1/40 SLAB TOP MANHOLE

N.T.S.

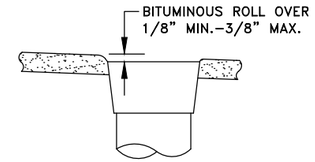

PAVING AT VALVE BOX DETAIL

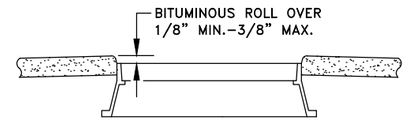

PAVING AT MANHOLE DETAIL

2/40 PAVING DETAILS ①

N.T.S.

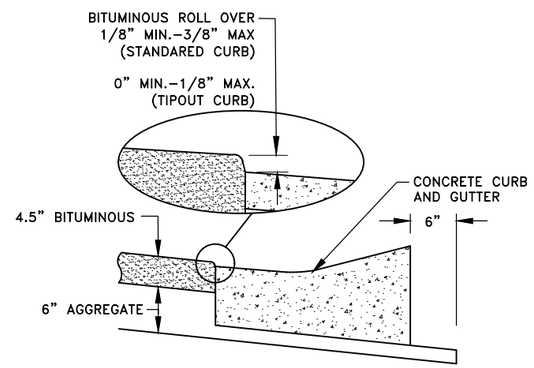

3/40 PAVING AT CURB DETAIL

N.T.S.

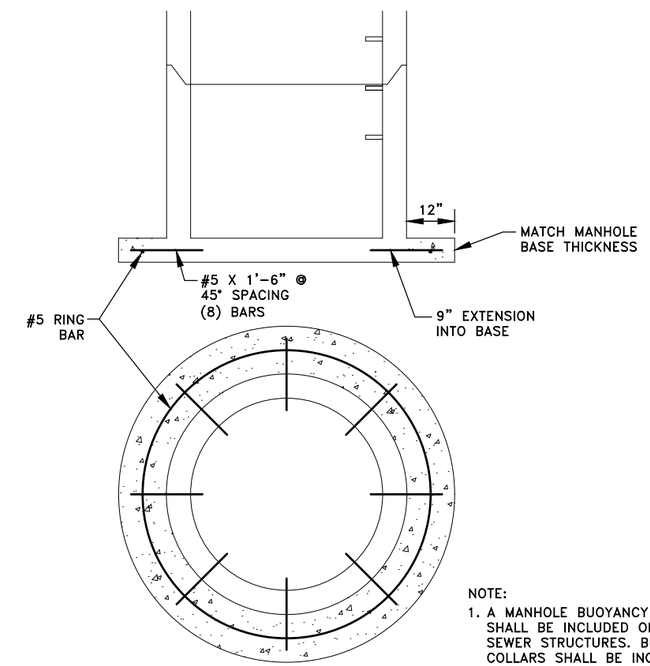

NOTE:
1. A MANHOLE BUOYANCY COLLAR SHALL BE INCLUDED ON SANITARY SEWER STRUCTURES. BUOYANCY COLLARS SHALL BE INCIDENTAL.

4/40 MANHOLE BUOYANCY COLLAR

REFERENCE NOTES:
① CONTRACTOR SHALL ADJUST SEWER CASTINGS AND VALVE BOXES TO WEAR COURSE WITH CONCRETE RINGS PER 5/8 IMMEDIATELY PRIOR TO PLACING WEAR COURSE. ADJUSTMENT OF CASTINGS SHALL BE INCIDENTAL.

DATE	REVISION

I hereby certify that this plan, specification, or report was prepared by me or under my direct supervision and that I am a duly Licensed Professional Engineer under the laws of the State of Minnesota.

CRAIG J. JOCHUM, P.E.
Date 8/7/20 Lic. No. 23461

DESIGNED BY: CJJ
DRAWN BY: SGJ
CHECKED BY: TAE

Hakanson Anderson
Civil Engineers and Land Surveyors
3601 Thurston Ave., Anoka, Minnesota 55303
763-427-5860 FAX 763-427-0520
www.hakanson-anderson.com

STATE PROJ. NO 0208-166 (TH65=005)
SAP 203-127-001, SAP 203-111-005,
SAP 203-113-003

DETAILS

TH 65 EAST SERVICE ROAD PROJECT

EB351

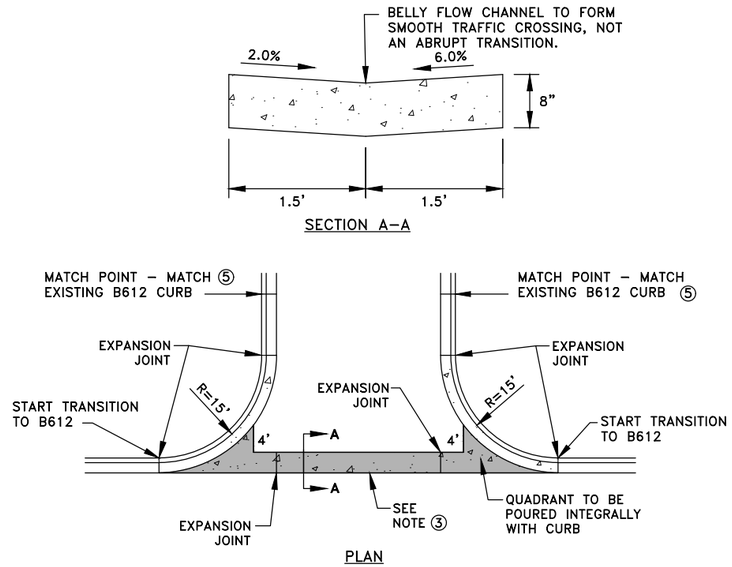

1/41 CONCRETE VALLEY GUTTER

NO SCALE

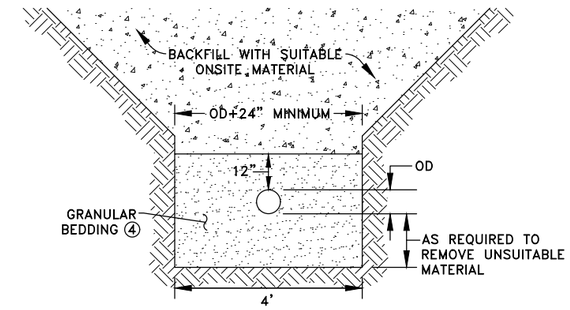

2/41 PIPE BEDDING DETAIL TYPE A

N.T.S.

GENERAL NOTES:

ALL PIPE BEDDING SHALL BE TYPE "A" UNLESS APPROVED OTHERWISE BY THE ENGINEER.

REFERENCE NOTES:

① SILT CURTAIN SHALL BE REMOVED WHEN THE AREA CONTRIBUTING DIRECT RUNOFF TO THE CREEK HAS BEEN PERMANENTLY STABILIZED. SILT CURTAIN SHALL ALSO BE REMOVED BEFORE WINTER IF ICE UP OR ICE FLOW IS ANTICIPATED.

② MINIMUM WATER DEPTH APPLIES TO THE DEEPEST POINT ALONG THE FLOATATION SILT CURTAIN FOR DETERMINING APPLICABILITY OF FLOATATION SILT CURTAIN.

③ SHADED AREA SHALL BE PAID PER ITEM 2531–8" CONCRETE DRIVEWAY PAVEMENT.

④ GRANULAR BEDDING SHALL MEET THE REQUIREMENTS OF MN/DOT SPEC 3149.2.F. ONSITE SOILS MEETING THE GRADATION OF GRANULAR BEDDING MAY BE USED. FURNISHING AND INSTALLING GRANULAR BEDDING SHALL BE INCIDENTAL. GRANULAR BEDDING SHALL BE COMPACTED TO 90% STANDARD PROCTOR DENSITY OUTSIDE ROAD RIGHT OF WAYS, 95% WITHIN ROAD RIGHT OF WAYS AND 100% WITHIN ROAD RIGHT OF WAYS AND WITHIN 3 FEET OF FINAL GRADE.

⑤ FROM MATCH POINT TO TRANSITION PAID AS 2531 CONCRETE CURB AND GUTTER DESIGN B612.

DATE	REVISION

I hereby certify that this plan, specification, or report was prepared by me or under my direct supervision and that I am a duly Licensed Professional Engineer under the laws of the State of Minnesota.

CRAIG J. JOCHUM, P.E.

Date 8/7/20 Lic. No. 23461

DESIGNED BY: CJJ
DRAWN BY: SGJ
CHECKED BY: TAE

Hakanson Anderson
Civil Engineers and Land Surveyors
3601 Thurston Ave., Anoka, Minnesota 55303
763–427–5860 FAX 763–427–0520
www.hakanson–anderson.com

STATE PROJ. NO 0208–166 (TH65=005)
SAP 203–127–001, SAP 203–111–005,
SAP 203–113–003

DETAILS

TH 65 EAST SERVICE ROAD PROJECT

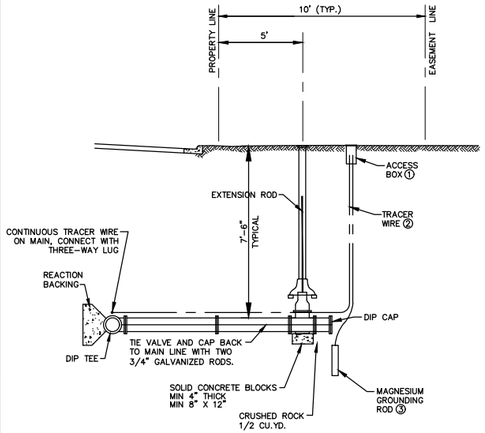

REFERENCE NOTES:

① ACCESS BOX SHALL BE A COPPERHEAD INDUSTRIES ROADWAY RB14BTP OR APPROVED EQUAL. ACCESS BOX LIDS SHALL BE COLOR CODED BLUE FOR WATERMAIN.

② TERMINATE TRACER WIRE IN BOX. PROVIDE 18" OF SLACK IN ACCESS BOX AND ATTACH TO TERMINAL CONNECTORS.

③ GROUNDING ROD SHALL HAVE RED WIRE THAT TERMINATES IN ACCESS BOX. PROVIDE 18" OF SLACK IN ACCESS BOX AND CONNECT TO TERMINAL.

LARGER THAN 2" DIAMETER
WATER SERVICE DETAIL
NO SCALE

APPROVED 3-02-05	CITY OF EAST BETHEL	STANDARD PLATE No. 201
REVISED 04-26-18		

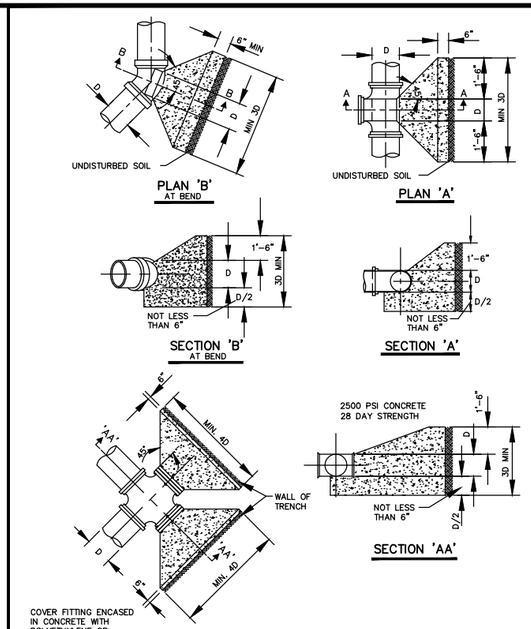

THRUST BLOCK DETAIL
NO SCALE

APPROVED 3-02-05	CITY OF EAST BETHEL	STANDARD PLATE No. 202
REVISED		

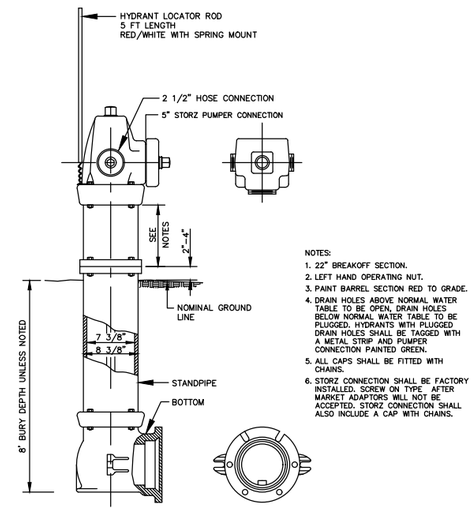

NOTES:
1. 22" BREAKOFF SECTION.
2. LEFT HAND OPERATING NUT.
3. PAINT BARREL SECTION RED TO GRADE.
4. DRAIN HOLES ABOVE NORMAL WATER TABLE TO BE OPEN. DRAIN HOLES BELOW NORMAL WATER TABLE TO BE PLUGGED. HYDRANTS WITH PLUGGED DRAIN HOLES SHALL BE TAGGED WITH A METAL STRIP AND PUMPER CONNECTION PAINTED GREEN.
5. ALL CAPS SHALL BE FITTED WITH CHAINS.
6. STORZ CONNECTION SHALL BE FACTORY INSTALLED. SCREW ON TYPE AFTER MARKET ADAPTORS WILL NOT BE ACCEPTED. STORZ CONNECTION SHALL ALSO INCLUDE A CAP WITH CHAINS.

WATEROUS PACER TRAFFIC FLANGE HYDRANT WITH STORZ CONNECTION
NO SCALE

APPROVED 3-02-05	CITY OF EAST BETHEL	STANDARD PLATE No. 203
REVISED 10-07-13		

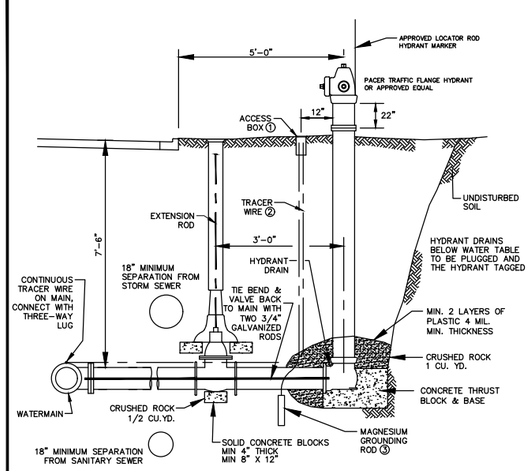

REFERENCE NOTES:

① ACCESS BOX SHALL BE A COPPERHEAD INDUSTRIES ROADWAY RB14BTP OR APPROVED EQUAL. ACCESS BOX LIDS SHALL BE COLOR CODED BLUE FOR WATERMAIN.

② TERMINATE TRACER WIRE IN BOX. PROVIDE 18" OF SLACK IN ACCESS BOX AND ATTACH TO TERMINAL CONNECTORS.

③ GROUNDING ROD SHALL HAVE RED WIRE THAT TERMINATES IN ACCESS BOX. PROVIDE 18" OF SLACK IN ACCESS BOX AND CONNECT TO TERMINAL.

HYDRANT AND HYDRANT GATE VALVE DETAIL
NO SCALE

APPROVED 3-02-05	CITY OF EAST BETHEL	STANDARD PLATE No. 204
REVISED 10-07-13		

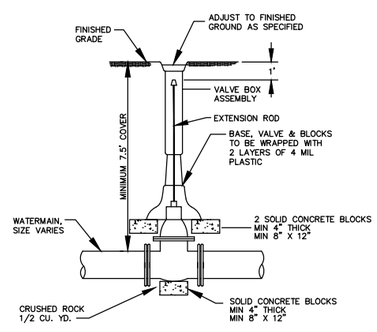

NOTES: ALL VALVES SHALL BE FITTED WITH EXTENSION RODS TO 1' BELOW FINISHED GRADE.

TYPICAL RESILIENT WEDGE VALVE AND BOX INSTALLATION 10" DIAMETER AND SMALLER WATERMAIN
NO SCALE

APPROVED 3-02-05	CITY OF EAST BETHEL	STANDARD PLATE No. 205
REVISED 10-07-13		

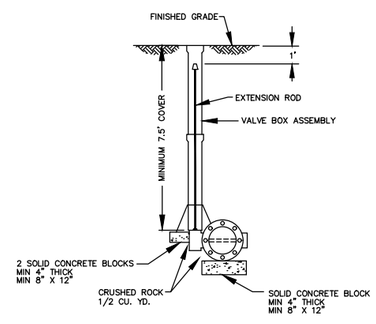

NOTES: ALL VALVES SHALL BE FITTED WITH EXTENSION RODS TO 1' BELOW FINISHED GRADE.

TYPICAL BUTTERFLY VALVE AND BOX INSTALLATION 12" DIAMETER AND LARGER WATERMAIN
NO SCALE

APPROVED 3-02-05	CITY OF EAST BETHEL	STANDARD PLATE No. 206
REVISED 10-07-13		

DATE	REVISION

I hereby certify that this plan, specification, or report was prepared by me or under my direct supervision and that I am a duly Licensed Professional Engineer under the laws of the State of Minnesota.

Craig J. Jochum
CRAIG J. JOCHUM, P.E.
Date 8/7/20 Lic. No. 23461

DESIGNED BY: CJJ
DRAWN BY: SGJ
CHECKED BY: TAE

Hakanson Anderson
Civil Engineers and Land Surveyors
3601 Thurston Ave., Anoka, Minnesota 55303
763-427-5860 FAX 763-427-0520
www.hakanson-anderson.com

STATE PROJ. NO 0208-166 (TH65=005)
SAP 203-127-001, SAP 203-111-005,
SAP 203-113-003

WATERMAIN DETAILS

TH 65 EAST SERVICE ROAD PROJECT

EB351

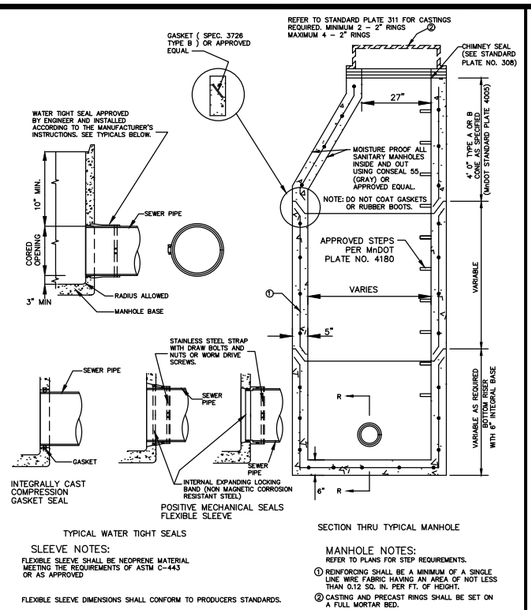

SLEEVE NOTES:

FLEXIBLE SLEEVE SHALL BE NEOPRENE MATERIAL MEETING THE REQUIREMENTS OF ASTM C-443 OR AS APPROVED

FLEXIBLE SLEEVE DIMENSIONS SHALL CONFORM TO PRODUCERS STANDARDS.

MANHOLE NOTES:
REFER TO PLANS FOR STEP REQUIREMENTS.

1. REINFORCING SHALL BE A MINIMUM OF A SINGLE LINE WIRE FABRIC HAVING AN AREA OF NOT LESS THAN 0.12 SQ. IN. PER FT. OF HEIGHT.
2. CASTING AND PRECAST RINGS SHALL BE SET ON A FULL MORTAR BED.

PRECAST MECHANICAL JOINT SEWER MANHOLE

NO SCALE

APPROVED 3-02-05 REVISED | CITY OF EAST BETHEL | **STANDARD PLATE No.** 301

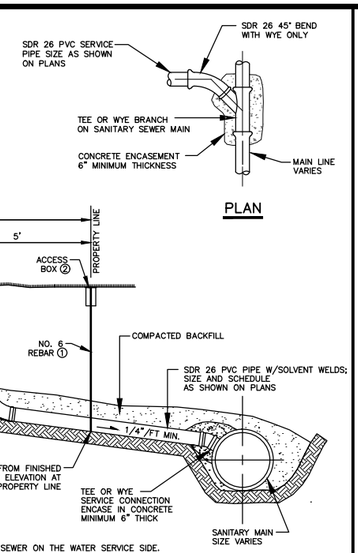

REFERENCE NOTES:

① PLACE NO. 6 REBAR ADJACENT TO SEWER ON THE WATER SERVICE SIDE.
② ACCESS BOX SHALL BE A COPPERHEAD INDUSTRIES ROADWAY RB14GTP OR APPROVED EQUAL. ACCESS BOX LIDS SHALL BE COLOR CODED GREEN FOR SEWER.
③ 45° BEND IS INCIDENTAL.

SHALLOW SANITARY MAIN SERVICE CONNECTION

NO SCALE

APPROVED 3-02-05 REVISED 10-07-13 | CITY OF EAST BETHEL | **STANDARD PLATE No.** 302

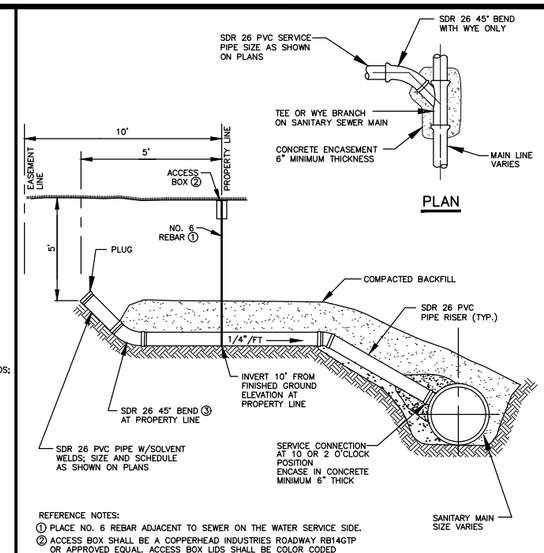

REFERENCE NOTES:

① PLACE NO. 6 REBAR ADJACENT TO SEWER ON THE WATER SERVICE SIDE.
② ACCESS BOX SHALL BE A COPPERHEAD INDUSTRIES ROADWAY RB14GTP OR APPROVED EQUAL. ACCESS BOX LIDS SHALL BE COLOR CODED GREEN FOR SEWER.
③ 45° BEND IS INCIDENTAL.

DEEP SANITARY MAIN SERVICE CONNECTION

NO SCALE

APPROVED 3-02-05 REVISED 10-07-13 | CITY OF EAST BETHEL | **STANDARD PLATE No.** 303

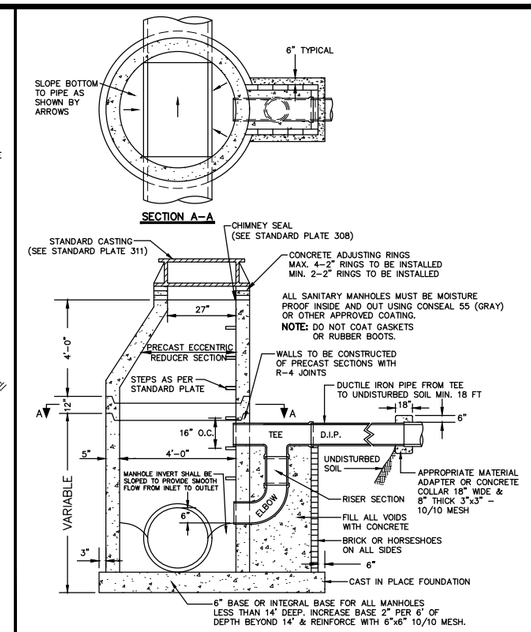

STANDARD DROP MANHOLE

NO SCALE

APPROVED 3-02-05 REVISED 10-07-13 | CITY OF EAST BETHEL | **STANDARD PLATE No.** 305

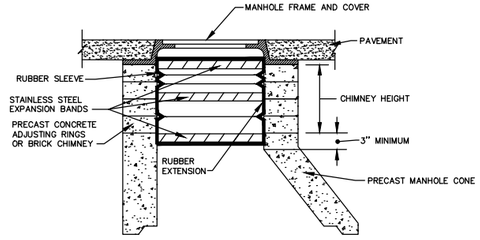

NOTES:

1. THE RUBBER SLEEVE IS AVAILABLE IN BOTH STANDARD, A 8.5" WIDE DOUBLE PLEATED, OR WIDE, A 10" WIDE TRIPLE PLEATED, CROSS SECTION. THE SAME EXPANSION BANDS AND EXTENTIONS ARE USED ON BOTH.
2. SEE CHIMNEY HEIGHT TABLE FOR SEAL AND EXTENSION COMBINATIONS NEEDED TO SPAN FROM THE FRAME TO THE TOP OF THE CONE ON MANHOLES WITH VARIOUS CHIMNEY HEIGHTS. FRAME OFFSETS OR DIAMETER DIFFERENTIALS WILL REDUCE THESE SPAN HEIGHTS.
3. THE TOP OF THE CONE MUST HAVE A MINIMUM 3" HIGH VERTICAL SURFACE THAT IS SMOOTH AND FREE OF ANY FORM OFFSETS OR EXCESSIVE HONEYCOMB. IF A 3" HIGH VERTICAL SURFACE IS NOT AVAILABLE DUE TO THE EXISTING CONFIGURATION OF THE EXISTING MANHOLE CONE, ONE MAY BE CREATED USING A CONE DISK FORM AND A NON SHRINK PATCHING MORTAR. PLANS FOR A FORM DISK CONE ARE AVAILABLE FROM CRETEX SPECIALTY PRODUCTS.
4. ALTERNATE SEALS: STANDARD PLATE NO.'S 309, 310 OR MULTI–PURPOSE MANHOLE AND SEPTIC JOINT SEAL AS MANUFACTURED BY AMERICAN INFRASTRUCTURE TECHNOLOGIES (952–471–2545) OR APPROVED EQUAL MAY BE USED AS CHIMNEY SEAL.

CHIMNEY HEIGHT TABLE

COMBINATIONS OF SEALS AND EXTENSIONS	TO SPAN HEIGHT OF	
	W / STANDARD SEAL	W / WIDE SEAL
SEAL ONLY	0"–4.5"	2"–7.5"
SEAL + 7" EXTENSION	OVER 4.5"–10.5"	OVER 7.5"–13.5"
SEAL + 10" EXTENSION	OVER 10.5"–13"	OVER 13.5"–16"
SEAL + MULT. EXTENSION	OVER 13"	OVER 16"
ADD 6" OF COVERAGE FOR EACH ADDITIONAL 7" EXTENSION ADD 8.5" OF COVERAGE FOR EACH ADDITIONAL 10" EXTENSION		

CHIMNEY SEAL

NO SCALE

APPROVED 3-02-05 REVISED | CITY OF EAST BETHEL | **STANDARD PLATE No.** 308

GENERAL NOTES:

1. ALL SANITARY SEWER MANHOLES SHALL INCLUDE A ONE FOOT BARREL SECTION UNDER THE ECCENTRIC CONE TO ALLOW FOR FUTURE ADJUSTMENT.
2. ALL SANITARY SEWER MANHOLES SHALL BE MOISTURE PROOF PER CITY STANDARD PLATE NO. 301. THIS WORK SHALL BE INCIDENTAL.
3. SANITARY SEWER MANHOLES ARE PAID PER ITEM 2506–CONSTRUCT DESIGN 4007. MEASURMENT OF THE MANHOLES SHALL BE FROM THE RIM ELEVATION MINUS THE LOWEST INVERT.

APPROVED
REVISED

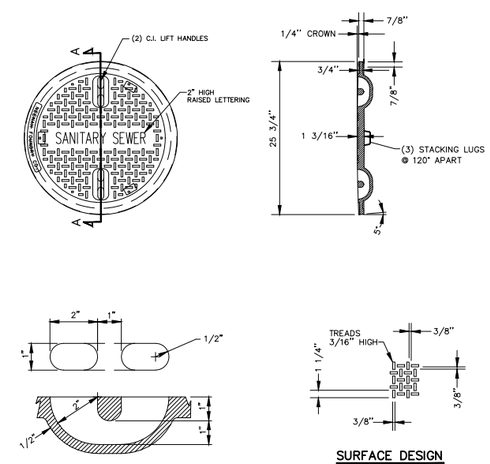

SECTION B–B

SURFACE DESIGN

NOTE: ALL DIMENSIONS SHOWN ARE IN ENGLISH
MATERIAL: CAST GRAY IRON ASTM A–48, CLASS 35B
FINISH: NO PAINT
WEIGHT: 122#

MANHOLE LID

NO SCALE

APPROVED 3-02-05 REVISED | CITY OF EAST BETHEL | **STANDARD PLATE No.** 311

DATE	REVISION

I hereby certify that this plan, specification, or report was prepared by me or under my direct supervision and that I am a duly Licensed Professional Engineer under the laws of the State of Minnesota.

Date 8/7/20 CRAIG J. JOCHUM, P.E. Lic. No. 23461

DESIGNED BY: CJJ
DRAWN BY: SGJ
CHECKED BY: TAE

Hakanson Anderson
Civil Engineers and Land Surveyors
3601 Thurston Ave., Anoka, Minnesota 55303
763-427-5860 FAX 763-427-0520
www.hakanson-anderson.com

STATE PROJ. NO 0208–166 (TH65=005)
SAP 203–127–001, SAP 203–111–005,
SAP 203–113–003

SANITARY SEWER DETAILS

TH 65 EAST SERVICE ROAD PROJECT

EB351

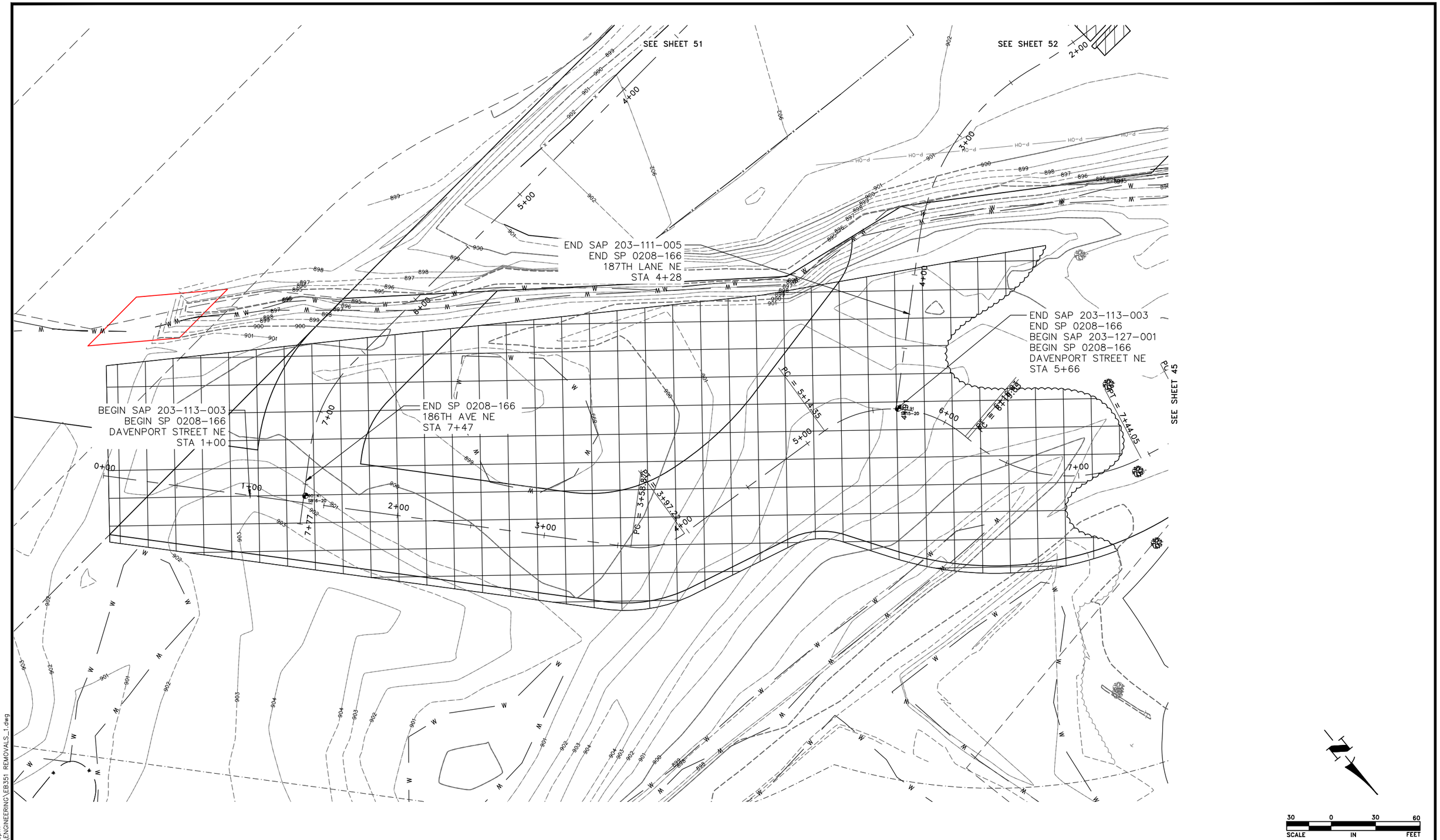

DATE	REVISION

I hereby certify that this plan, specification, or report was prepared by me or under my direct supervision and that I am a duly Licensed Professional Engineer under the laws of the State of Minnesota.

CRAIG J. JOCHUM, P.E.
Date 8/7/20 Lic. No. 23461

DESIGNED BY: CJJ
DRAWN BY: SGJ
CHECKED BY: TAE

Hakanson Anderson
Civil Engineers and Land Surveyors
3601 Thurston Ave., Anoka, Minnesota 55303
763-427-5860 FAX 763-427-0520
www.hakanson-anderson.com

STATE PROJ. NO 0208-166 (TH65=005)
SAP 203-127-001, SAP 203-111-005,
SAP 203-113-003

EXISTING TOPOGRAPHY AND REMOVALS

DAVENPORT STREET NE
TH 65 EAST SERVICE ROAD PROJECT

SHEET 44 OF 109 SHEETS

EB351

Aug 19, 2020 – 1:10pm
K:\MUNICIPAL\EB351\ENGINEERING\EB351 REMOVALS_1.dwg

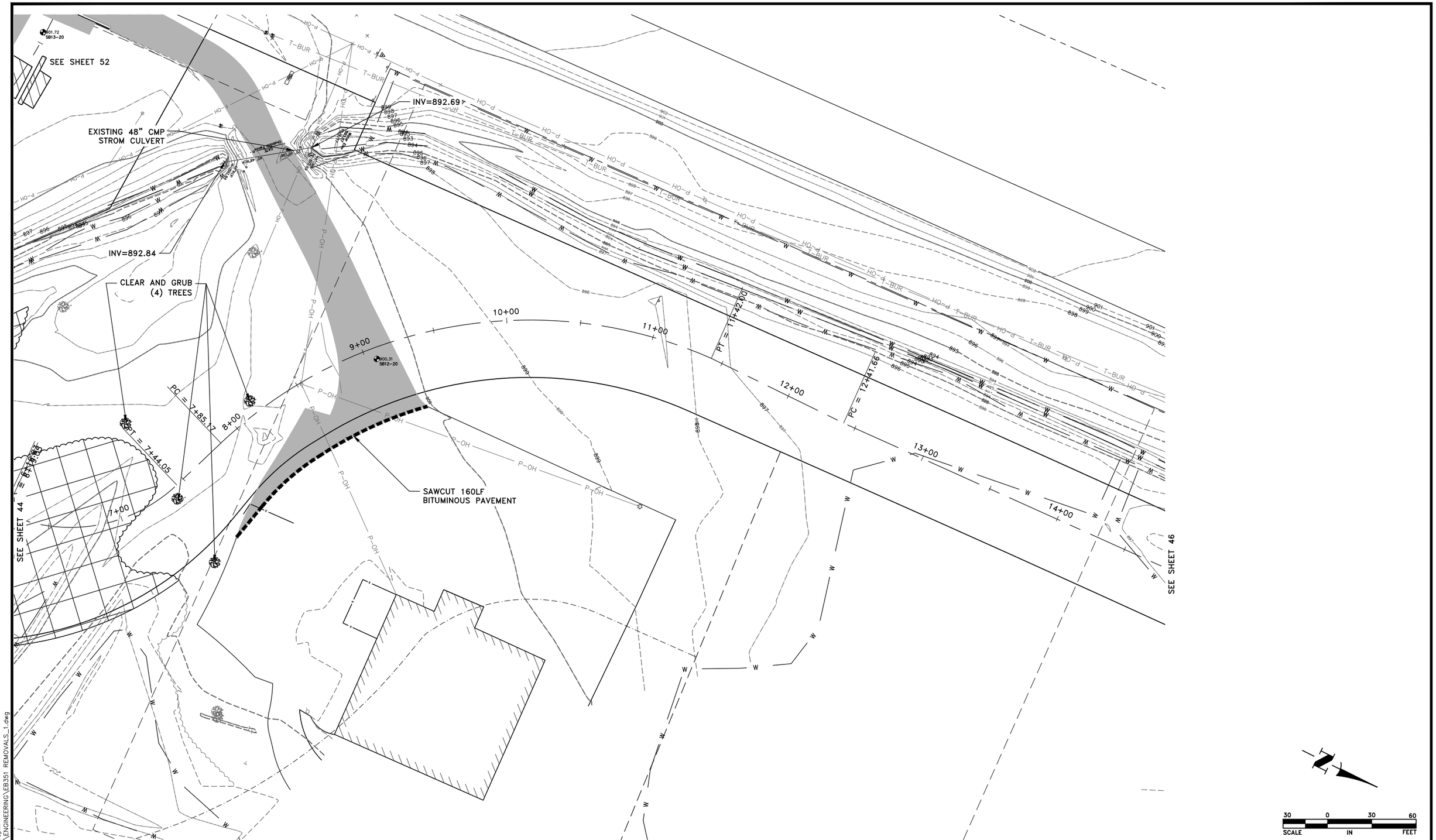

DATE	REVISION

I hereby certify that this plan, specification, or report was prepared by me or under my direct supervision and that I am a duly Licensed Professional Engineer under the laws of the State of Minnesota.

CRAIG J. JOCHUM, P.E.
Date 8/7/20 Lic. No. 23461

DESIGNED BY: CJJ
DRAWN BY: SGJ
CHECKED BY: TAE

Hakanson Anderson
Civil Engineers and Land Surveyors
3601 Thurston Ave., Anoka, Minnesota 55303
763-427-5860 FAX 763-427-0520
www.hakanson-anderson.com

STATE PROJ. NO 0208-166 (TH65=005)
SAP 203-127-001, SAP 203-111-005,
SAP 203-113-003

EXISTING TOPOGRAPHY AND REMOVALS

DAVENPORT STREET NE
TH 65 EAST SERVICE ROAD PROJECT

SHEET 45 OF 109 SHEETS

EB351

Aug 19, 2020 – 1:10pm
K:\MUNICIPAL\EB351\ENGINEERING\EB351 REMOVALS_1.dwg

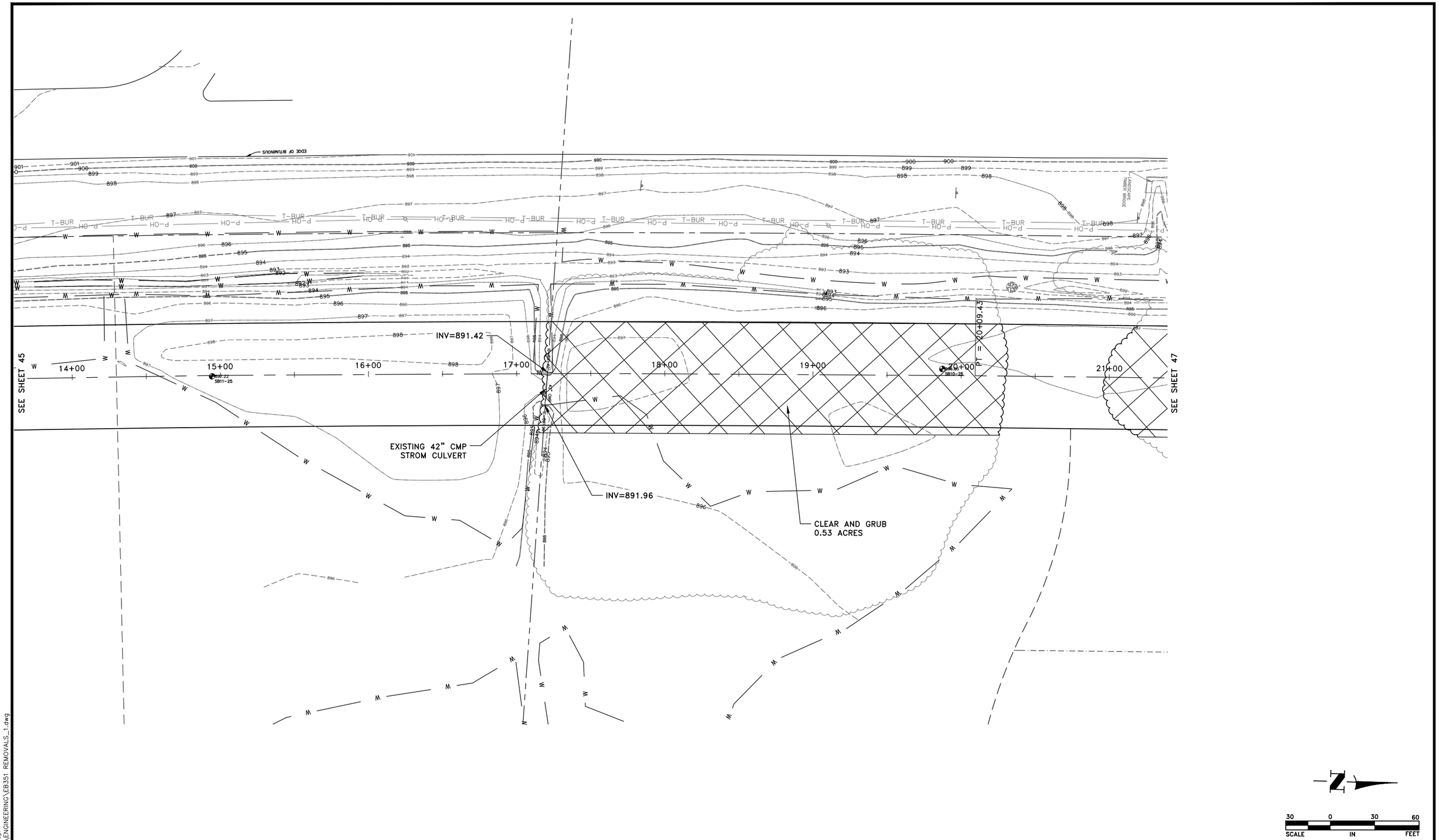

DATE	REVISION

I hereby certify that this plan, specification, or report was prepared by me or under my direct supervision and that I am a duly Licensed Professional Engineer under the laws of the State of Minnesota.

CRAIG J. JOCHUM, P.E.

Date 8/7/20 Lic. No. 23461

DESIGNED BY: CJJ
DRAWN BY: SGJ
CHECKED BY: TAE

Hakanson Anderson
Civil Engineers and Land Surveyors
3601 Thurston Ave., Anoka, Minnesota 55303
763-427-5860 FAX 763-427-0520
www.hakanson-anderson.com

STATE PROJ. NO 0208-166 (TH65=005)
SAP 203-127-001, SAP 203-111-005,
SAP 203-113-003

EXISTING TOPOGRAPHY AND REMOVALS

DAVENPORT STREET NE
TH 65 EAST SERVICE ROAD PROJECT

EB351

Aug 19, 2020 – 1:10pm
K:\MUNICIPAL\EB351\ENGINEERING\EB351 REMOVALS_1.dwg

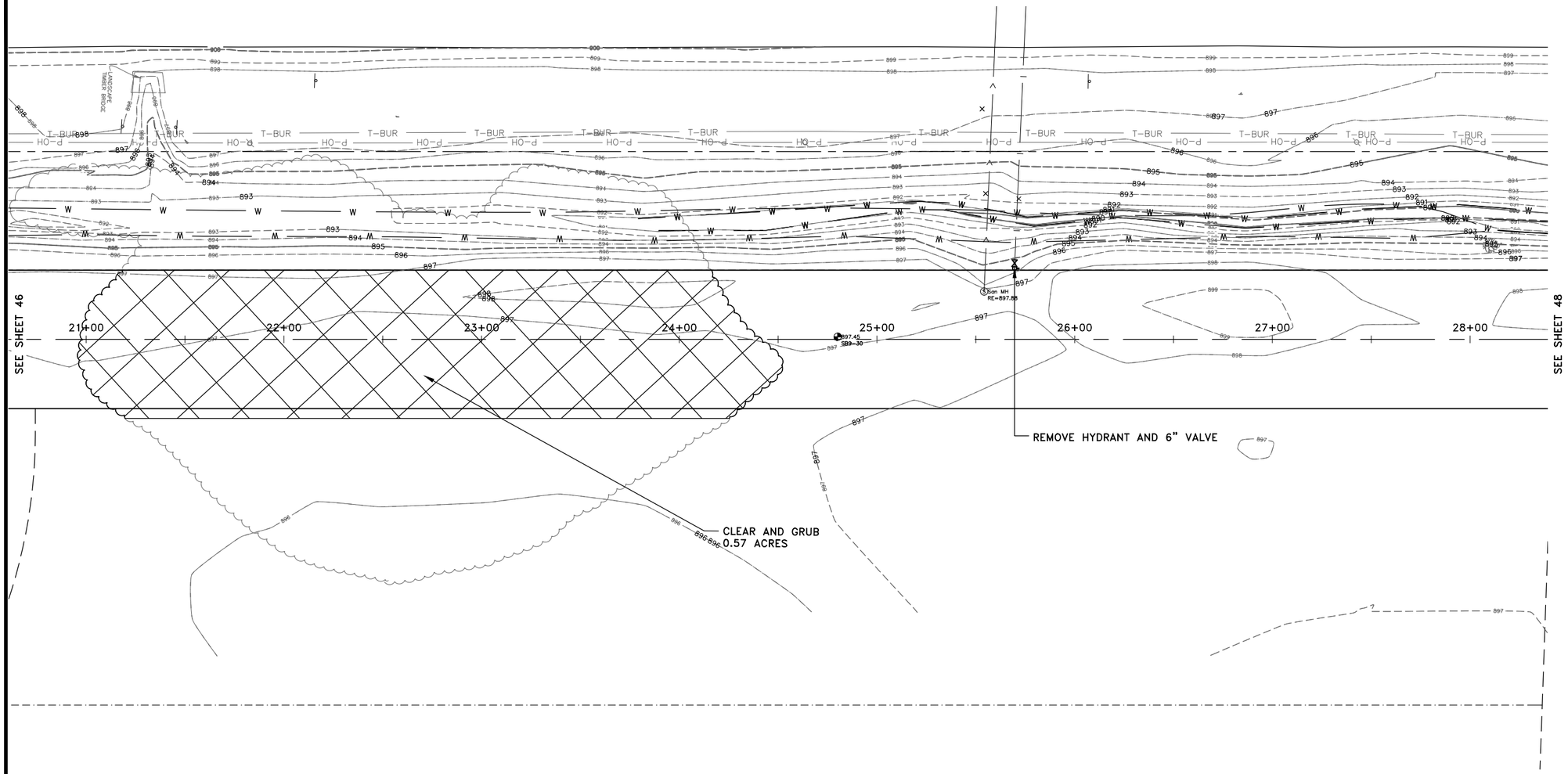

30 0 30 60
SCALE IN FEET

DATE	REVISION

I hereby certify that this plan, specification, or report was prepared by me or under my direct supervision and that I am a duly Licensed Professional Engineer under the laws of the State of Minnesota.

CRAIG J. JOCHUM, P.E.
Date 8/7/20 Lic. No. 23461

DESIGNED BY: CJJ
DRAWN BY: SGJ
CHECKED BY: TAE

Hakanson Anderson
Civil Engineers and Land Surveyors
3601 Thurston Ave., Anoka, Minnesota 55303
763-427-5860 FAX 763-427-0520
www.hakanson-anderson.com

STATE PROJ. NO 0208-166 (TH65=005)
SAP 203-127-001, SAP 203-111-005,
SAP 203-113-003

EXISTING TOPOGRAPHY AND REMOVALS

DAVENPORT STREET NE
TH 65 EAST SERVICE ROAD PROJECT

SHEET 47 OF 109 SHEETS

EB351

Aug 19, 2020 – 1:10pm
K:\MUNICIPAL\EB351\ENGINEERING\EB351 REMOVALS_1.dwg

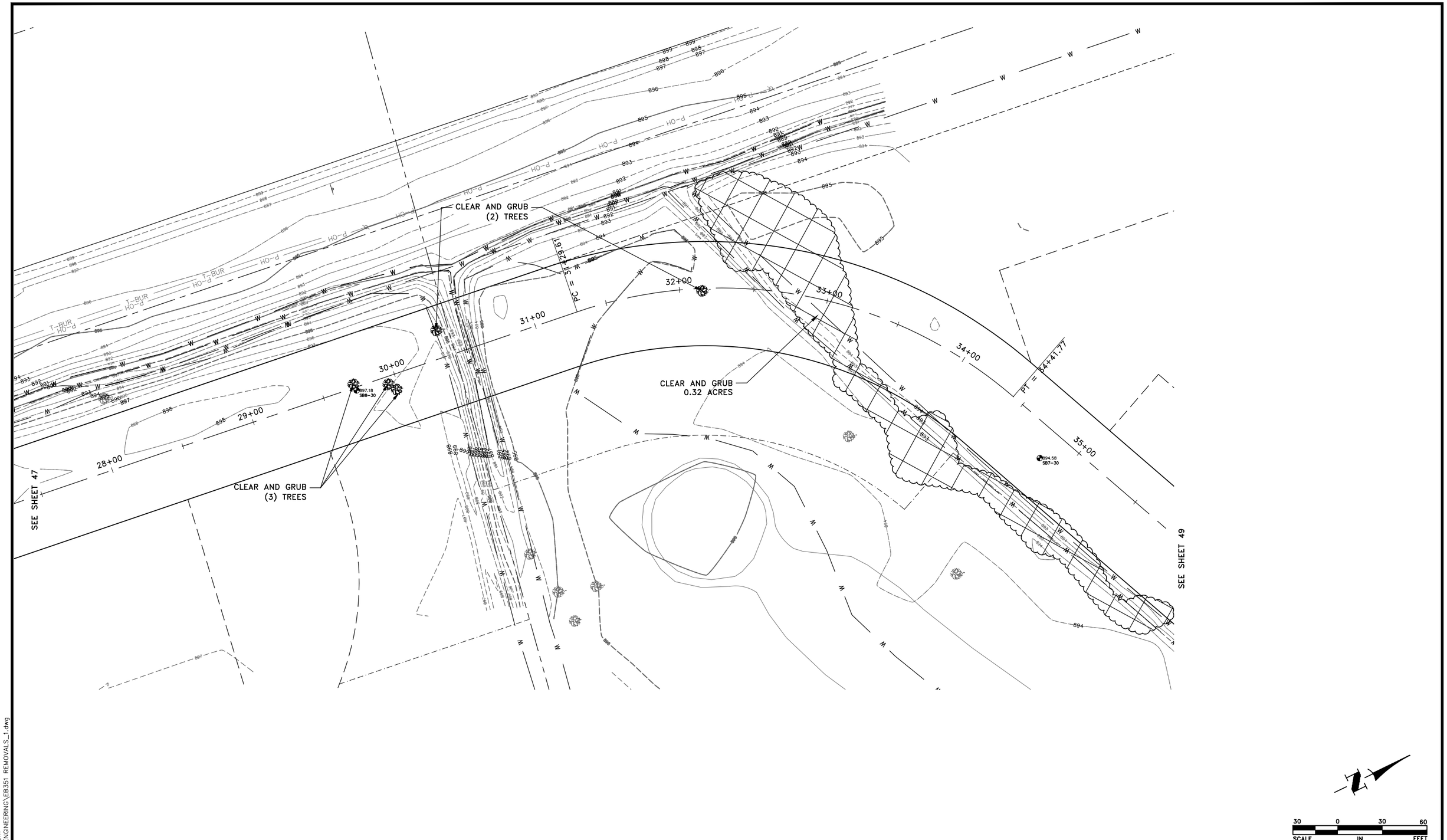

DATE	REVISION

I hereby certify that this plan, specification, or report was prepared by me or under my direct supervision and that I am a duly Licensed Professional Engineer under the laws of the State of Minnesota.

CRAIG J. JOCHUM, P.E.
Date 8/7/20 Lic. No. 23461

DESIGNED BY: CJJ
DRAWN BY: SGJ
CHECKED BY: TAE

Hakanson Anderson
Civil Engineers and Land Surveyors
3601 Thurston Ave., Anoka, Minnesota 55303
763-427-5860 FAX 763-427-0520
www.hakanson-anderson.com

STATE PROJ. NO 0208-166 (TH65=005)
SAP 203-127-001, SAP 203-111-005,
SAP 203-113-003

EXISTING TOPOGRAPHY AND REMOVALS

DAVENPORT STREET NE
TH 65 EAST SERVICE ROAD PROJECT

EB351

Aug 19, 2020 – 1:11pm
K:\MUNICIPAL\EB351\ENGINEERING\EB351 REMOVALS_1.dwg

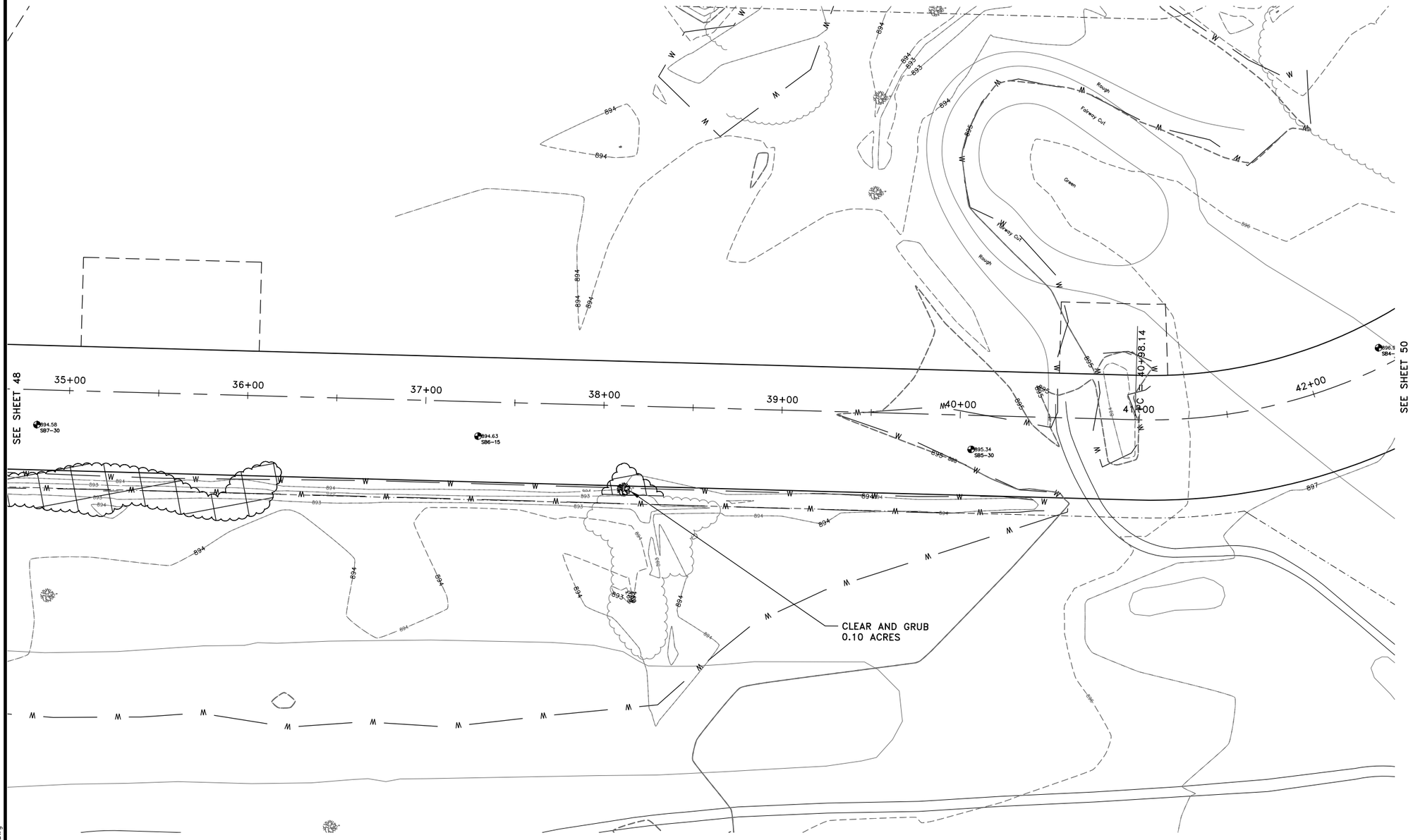

30 0 30 60
SCALE IN FEET

DATE	REVISION

I hereby certify that this plan, specification, or report was prepared by me or under my direct supervision and that I am a duly Licensed Professional Engineer under the laws of the State of Minnesota.

CRAIG J. JOCHUM, P.E.
Date 8/7/20 Lic. No. 23461

DESIGNED BY: CJJ
DRAWN BY: SGJ
CHECKED BY: TAE

Hakanson Anderson
Civil Engineers and Land Surveyors
3601 Thurston Ave., Anoka, Minnesota 55303
763-427-5860 FAX 763-427-0520
www.hakanson-anderson.com

STATE PROJ. NO 0208-166 (TH65=005)
SAP 203-127-001, SAP 203-111-005,
SAP 203-113-003

EXISTING TOPOGRAPHY AND REMOVALS

DAVENPORT STREET NE
TH 65 EAST SERVICE ROAD PROJECT

EB351

Aug 19, 2020 – 1:11pm
K:\MUNICIPAL\EB351\ENGINEERING\EB351 REMOVALS_1.dwg

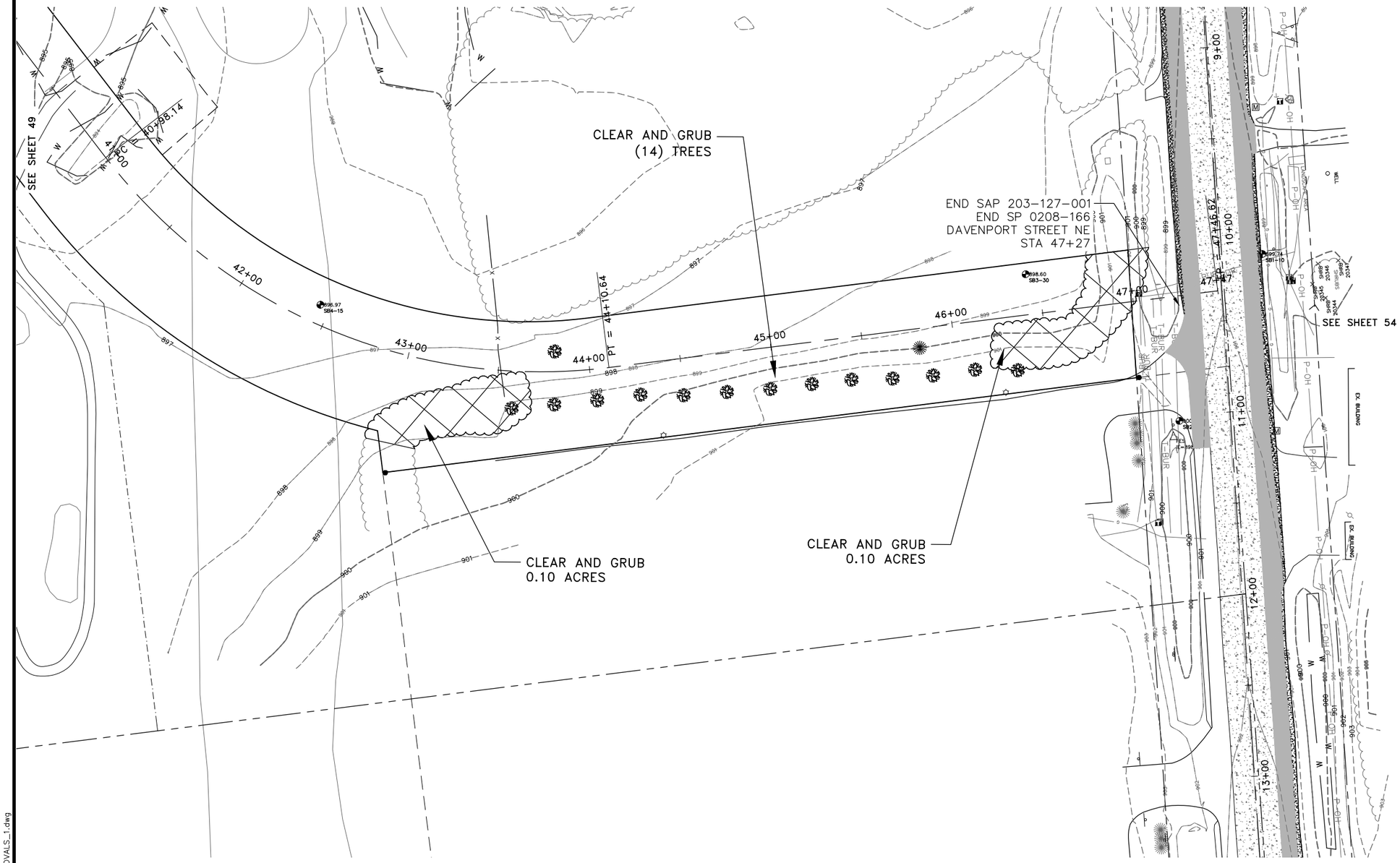

DATE	REVISION

I hereby certify that this plan, specification, or report was prepared by me or under my direct supervision and that I am a duly Licensed Professional Engineer under the laws of the State of Minnesota.

CRAIG J. JOCHUM, P.E.
Date 8/7/20 Lic. No. 23461

DESIGNED BY: CJJ
DRAWN BY: SGJ
CHECKED BY: TAE

Hakanson Anderson
Civil Engineers and Land Surveyors
3601 Thurston Ave., Anoka, Minnesota 55303
763-427-5860 FAX 763-427-0520
www.hakanson-anderson.com

STATE PROJ. NO 0208-166 (TH65=005)
SAP 203-127-001, SAP 203-111-005,
SAP 203-113-003

EXISTING TOPOGRAPHY AND REMOVALS

DAVENPORT STREET NE
TH 65 EAST SERVICE ROAD PROJECT

SHEET 50 OF 109 SHEETS

EB351

Aug 19, 2020 - 1:11pm
K:\MUNICIPAL\EB351\ENGINEERING\EB351 REMOVALS_1.dwg

END SAP 203-111-005
END SP 0208-166
187TH AVE NE
STA 4+28

END SAP 203-113-003
END SP 0208-166
BEGIN SAP 203-127-001
BEGIN SP 0208-166
DAVENPORT STREET NE
STA 5+66

SEE SHEET 52

SEE SHEET 44

CLEAR AND GRUB
2.57 ACRES

END SP 0208-166
186TH AVE NE
STA 7+47

REMOVE 33LF FENCE

REMOVE HYDRANT
AND GATE VALVE

REMOVE 321LF FENCE

REMOVE 84LF CURB AND GUTTER

REMOVE 2309 SF
CONCRETE PAVEMENT

REMOVE 17 SY
BITUMINOUS PAVEMENT

BEGIN SP 0208-166
186TH AVE NE
STA 0+00

BEGIN SAP 203-113-003
BEGIN SP 0208-166
DAVENPORT STREET NE
STA 1+00

SCALE 30 0 30 60 IN FEET

DATE	REVISION

I hereby certify that this plan, specification, or report was prepared by me or under my direct supervision and that I am a duly Licensed Professional Engineer under the laws of the State of Minnesota.

CRAIG J. JOCHUM, P.E.
Date 8/7/20 Lic. No. 23461

DESIGNED BY: CJJ
DRAWN BY: SGJ
CHECKED BY: TAE

Hakanson Anderson
Civil Engineers and Land Surveyors
3601 Thurston Ave., Anoka, Minnesota 55303
763-427-5860 FAX 763-427-0520
www.hakanson-anderson.com

STATE PROJ. NO 0208-166 (TH65=005)
SAP 203-127-001, SAP 203-111-005,
SAP 203-113-003

EXISTING TOPOGRAPHY AND REMOVALS
186TH AVE NE
TH 65 EAST SERVICE ROAD PROJECT

SHEET 51 OF 109 SHEETS

EB351

Aug 19, 2020 – 1:11pm
K:\MUNICIPAL\EB351\ENGINEERING\EB351 REMOVALS_1.dwg

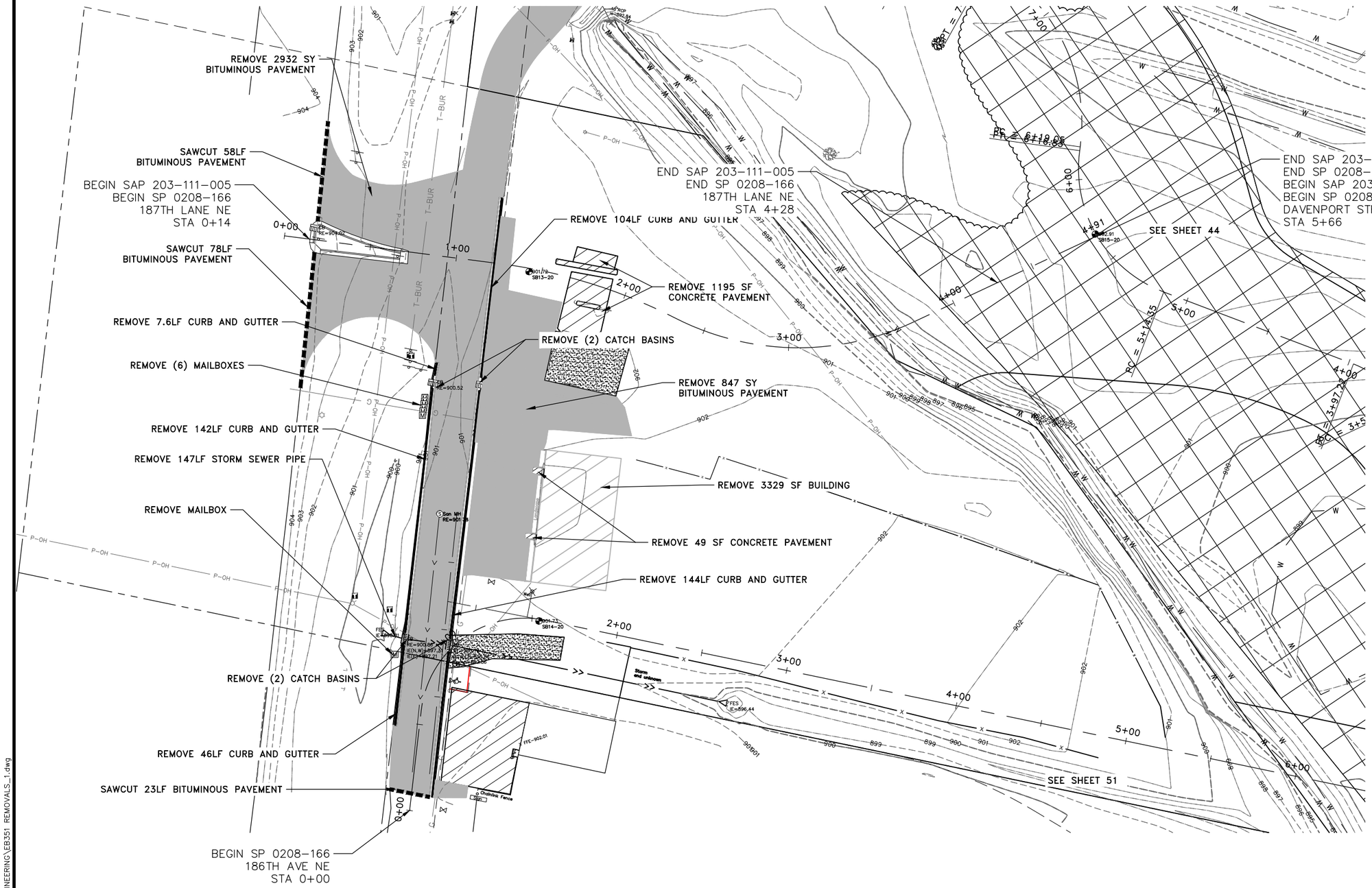

DATE	REVISION

I hereby certify that this plan, specification, or report was prepared by me or under my direct supervision and that I am a duly Licensed Professional Engineer under the laws of the State of Minnesota.

CRAIG J. JOCHUM, P.E.
Date 8/7/20 Lic. No. 23461

DESIGNED BY: CJJ
DRAWN BY: SGJ
CHECKED BY: TAE

Hakanson Anderson
Civil Engineers and Land Surveyors
3601 Thurston Ave., Anoka, Minnesota 55303
763-427-5860 FAX 763-427-0520
www.hakanson-anderson.com

STATE PROJ. NO 0208-166 (TH65=005)
SAP 203-127-001, SAP 203-111-005,
SAP 203-113-003

EXISTING TOPOGRAPHY AND REMOVALS

187TH LANE NE
TH 65 EAST SERVICE ROAD PROJECT

SHEET 52 OF 109 SHEETS

EB351

Aug 19, 2020 - 1:11pm
K:\MUNICIPAL\EB351\ENGINEERING\EB351 REMOVALS_1.dwg

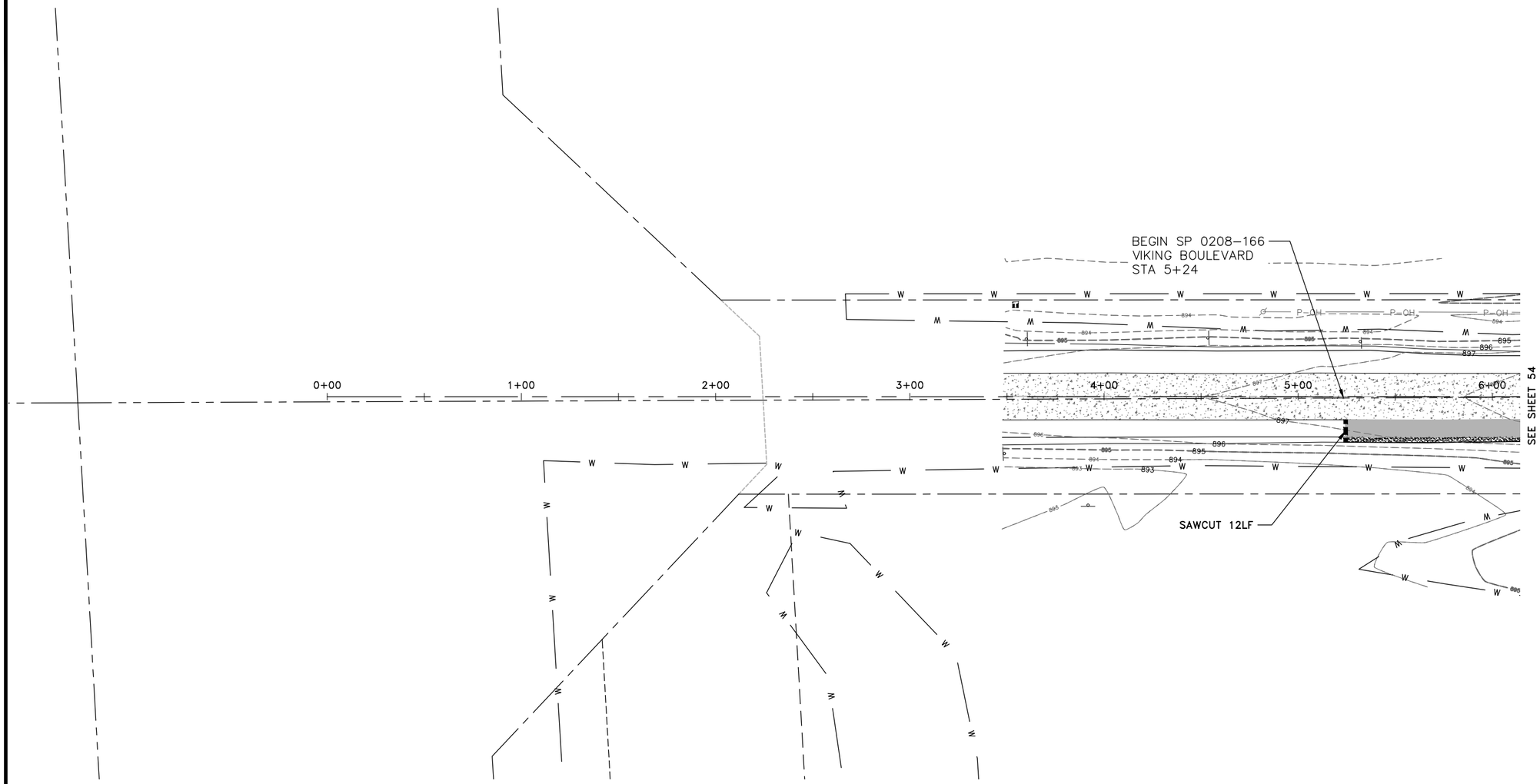

GENERAL NOTES:

1 ALL WORK WITHIN THE ANOKA COUNTY HIGHWAY DEPARTMENT RIGHT OF WAY SHALL BE IN ACCORDANCE WITH THE 2018 MN/DOT STANDARD SPECIFICATIONS FOR CONSTRUCTION.
2 SEE SHEETS 74-76 FOR CONSTRUCTION.
3 SEE SHEETS 97-100 FOR EROSION CONTROL.
4 SEE SHEETS 106-107 FOR SIGNING AND STRIPING.
5 SEE SHEETS 108-109 FOR TRAFFIC CONTROL.
6 SEE SHEETS X1-X3 FOR CROSS-SECTIONS.

N

30 0 30 60
SCALE IN FEET

DATE	REVISION

I hereby certify that this plan, specification, or report was prepared by me or under my direct supervision and that I am a duly Licensed Professional Engineer under the laws of the State of Minnesota.

CRAIG J. JOCHUM, P.E.
Date 8/7/20 Lic. No. 23461

DESIGNED BY: CJJ
DRAWN BY: SGJ
CHECKED BY: TAE

Hakanson Anderson
Civil Engineers and Land Surveyors
3601 Thurston Ave., Anoka, Minnesota 55303
763-427-5860 FAX 763-427-0520
www.hakanson-anderson.com

STATE PROJ. NO 0208-166 (TH65=005)
SAP 203-127-001, SAP 203-111-005,
SAP 203-113-003

EXISTING TOPOGRAPHY AND REMOVALS

VIKING BOULEVARD
TH 65 EAST SERVICE ROAD PROJECT

EB351

Aug 19, 2020 - 1:11pm
K:\MUNICIPAL\EB351\ENGINEERING\EB351 REMOVALS_1.dwg

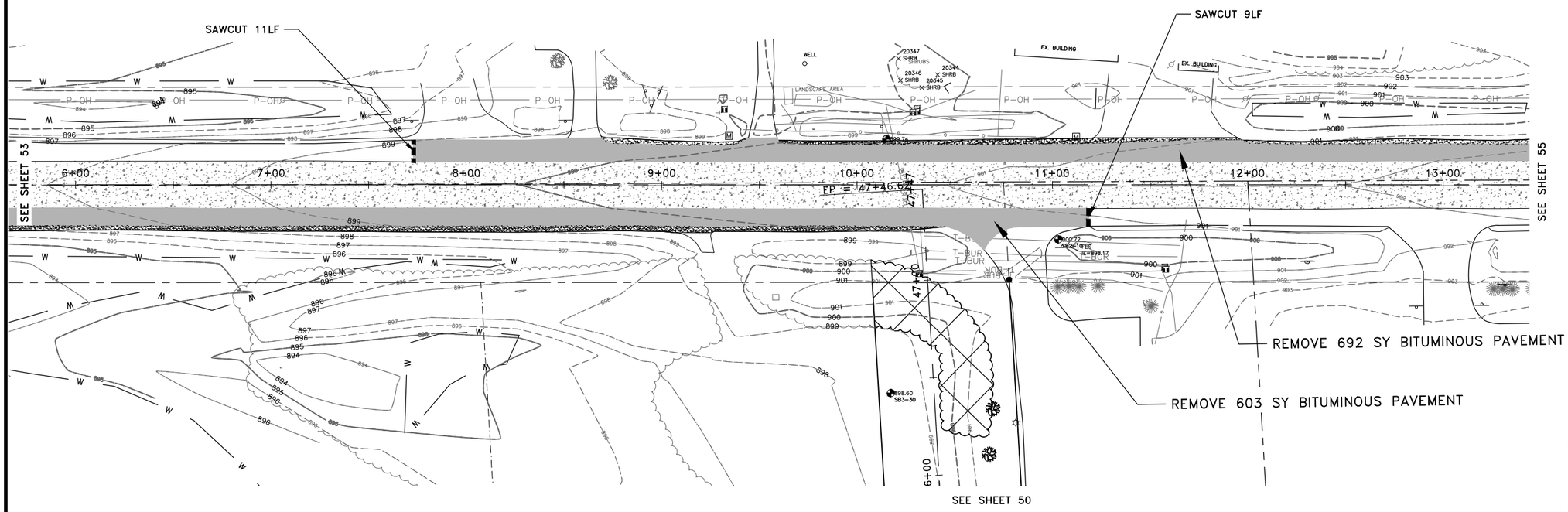

GENERAL NOTES:

1 ALL WORK WITHIN THE ANOKA COUNTY HIGHWAY DEPARTMENT RIGHT OF WAY SHALL BE IN ACCORDANCE WITH THE 2018 MN/DOT STANDARD SPECIFICATIONS FOR CONSTRUCTION.
2 SEE SHEETS 74–76 FOR CONSTRUCTION.
3 SEE SHEETS 97–100 FOR EROSION CONTROL.
4 SEE SHEETS 106–107 FOR SIGNING AND STRIPING.
5 SEE SHEETS 108–109 FOR TRAFFIC CONTROL.
6 SEE SHEETS X1–X3 FOR CROSS–SECTIONS.

N

30 0 30 60
SCALE IN FEET

DATE	REVISION

I hereby certify that this plan, specification, or report was prepared by me or under my direct supervision and that I am a duly Licensed Professional Engineer under the laws of the State of Minnesota.

CRAIG J. JOCHUM, P.E.
Date 8/7/20 Lic. No. 23461

DESIGNED BY: CJJ
DRAWN BY: SGJ
CHECKED BY: TAE

Hakanson Anderson
Civil Engineers and Land Surveyors
3601 Thurston Ave., Anoka, Minnesota 55303
763–427–5860 FAX 763–427–0520
www.hakanson–anderson.com

STATE PROJ. NO 0208–166 (TH65=005)
SAP 203–127–001, SAP 203–111–005,
SAP 203–113–003

EXISTING TOPOGRAPHY AND REMOVALS

VIKING BOULEVARD
TH 65 EAST SERVICE ROAD PROJECT

EB351

Aug 19, 2020 – 1:12pm
K:\MUNICIPAL\EB351\ENGINEERING\EB351 REMOVALS_1.dwg

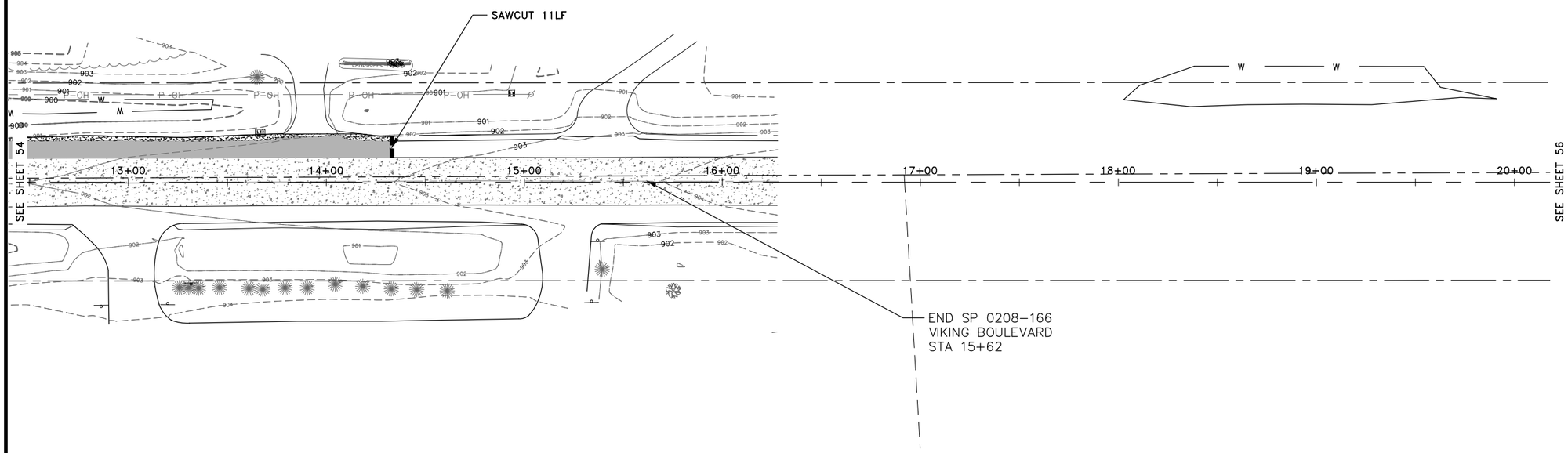

GENERAL NOTES:

1 ALL WORK WITHIN THE ANOKA COUNTY HIGHWAY DEPARTMENT RIGHT OF WAY SHALL BE IN ACCORDANCE WITH THE 2018 MN/DOT STANDARD SPECIFICATIONS FOR CONSTRUCTION.
2 SEE SHEETS 74–76 FOR CONSTRUCTION.
3 SEE SHEETS 97–100 FOR EROSION CONTROL.
4 SEE SHEETS 106–107 FOR SIGNING AND STRIPING.
5 SEE SHEETS 108–109 FOR TRAFFIC CONTROL.
6 SEE SHEETS X1–X3 FOR CROSS-SECTIONS.

N

30 0 30 60
SCALE IN FEET

DATE	REVISION

I hereby certify that this plan, specification, or report was prepared by me or under my direct supervision and that I am a duly Licensed Professional Engineer under the laws of the State of Minnesota.

CRAIG J. JOCHUM, P.E.
Date 8/7/20 Lic. No. 23461

DESIGNED BY: CJJ
DRAWN BY: SGJ
CHECKED BY: TAE

Hakanson Anderson
Civil Engineers and Land Surveyors
3601 Thurston Ave., Anoka, Minnesota 55303
763-427-5860 FAX 763-427-0520
www.hakanson-anderson.com

STATE PROJ. NO 0208-166 (TH65=005)
SAP 203-127-001, SAP 203-111-005,
SAP 203-113-003

EXISTING TOPOGRAPHY AND REMOVALS

VIKING BOULEVARD
TH 65 EAST SERVICE ROAD PROJECT

EB351

Aug 19, 2020 – 1:12pm
K:\MUNICIPAL\EB351\ENGINEERING\EB351 REMOVALS_1.dwg

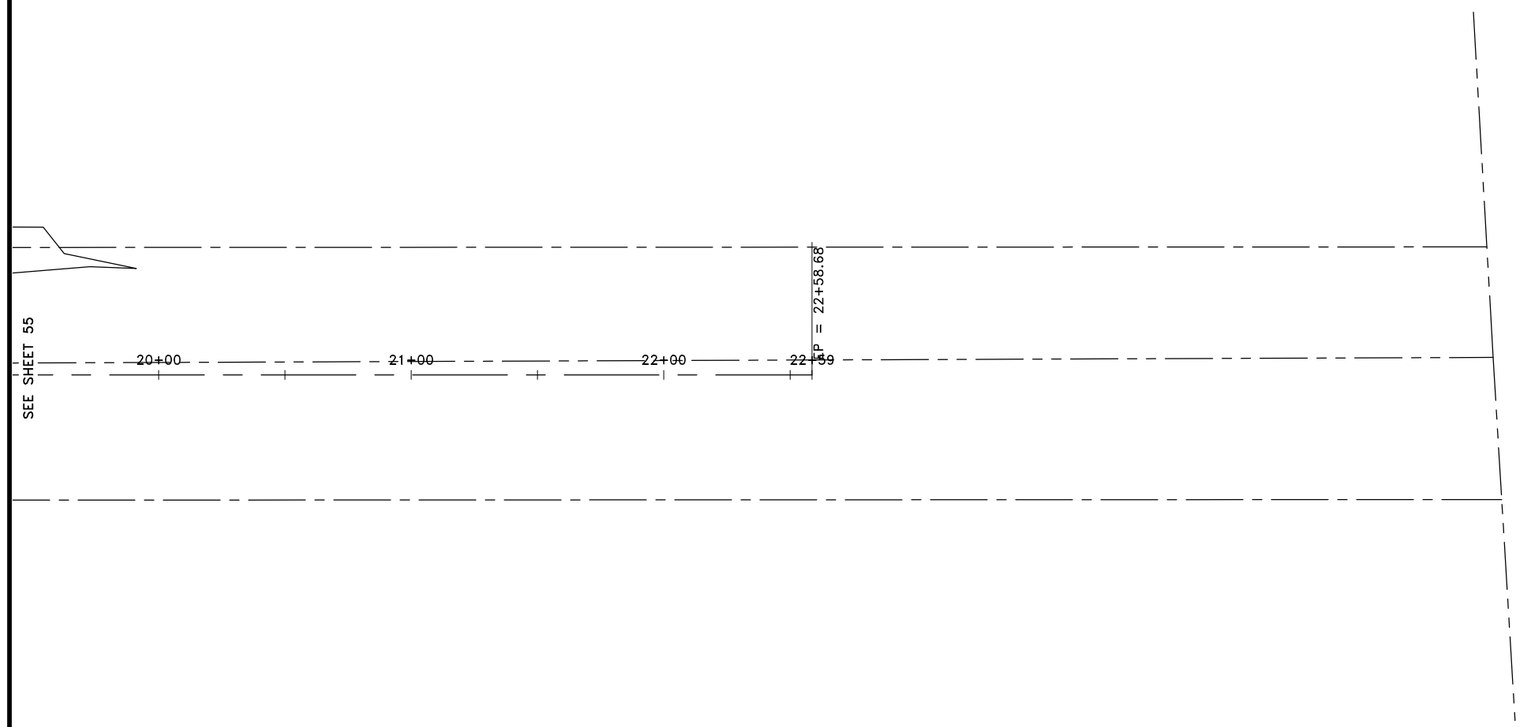

GENERAL NOTES:

1 ALL WORK WITHIN THE ANOKA COUNTY HIGHWAY DEPARTMENT RIGHT OF WAY SHALL BE IN ACCORDANCE WITH THE 2018 MN/DOT STANDARD SPECIFICATIONS FOR CONSTRUCTION.
2 SEE SHEETS 74–76 FOR CONSTRUCTION.
3 SEE SHEETS 97–100 FOR EROSION CONTROL.
4 SEE SHEETS 106–107 FOR SIGNING AND STRIPING.
5 SEE SHEETS 108–109 FOR TRAFFIC CONTROL.
6 SEE SHEETS X1–X3 FOR CROSS–SECTIONS.

N

30 0 30 60
SCALE IN FEET

DATE	REVISION

I hereby certify that this plan, specification, or report was prepared by me or under my direct supervision and that I am a duly Licensed Professional Engineer under the laws of the State of Minnesota.

CRAIG J. JOCHUM, P.E.
Date 8/7/20 Lic. No. 23461

DESIGNED BY: CJJ
DRAWN BY: SGJ
CHECKED BY: TAE

Hakanson Anderson
Civil Engineers and Land Surveyors
3601 Thurston Ave., Anoka, Minnesota 55303
763–427–5860 FAX 763–427–0520
www.hakanson–anderson.com

STATE PROJ. NO 0208–166 (TH65=005)
SAP 203–127–001, SAP 203–111–005,
SAP 203–113–003

EXISTING TOPOGRAPHY AND REMOVALS

VIKING BOULEVARD
TH 65 EAST SERVICE ROAD PROJECT

SHEET 56 OF 109 SHEETS

EB351

Aug 19, 2020 – 1:12pm
K:\MUNICIPAL\EB351\ENGINEERING\EB351 REMOVALS_1.dwg

REFERENCE NOTES:

① CONSTRUCT HYDRANT PER CITY STANDARD [LATES 203 AND 204, AS SHOWN ON SHEET 42.

② CONSTRUCT VALVE PER CITY STANDARD PLATE NO 206, AS SHOWN ON SHEET 42.

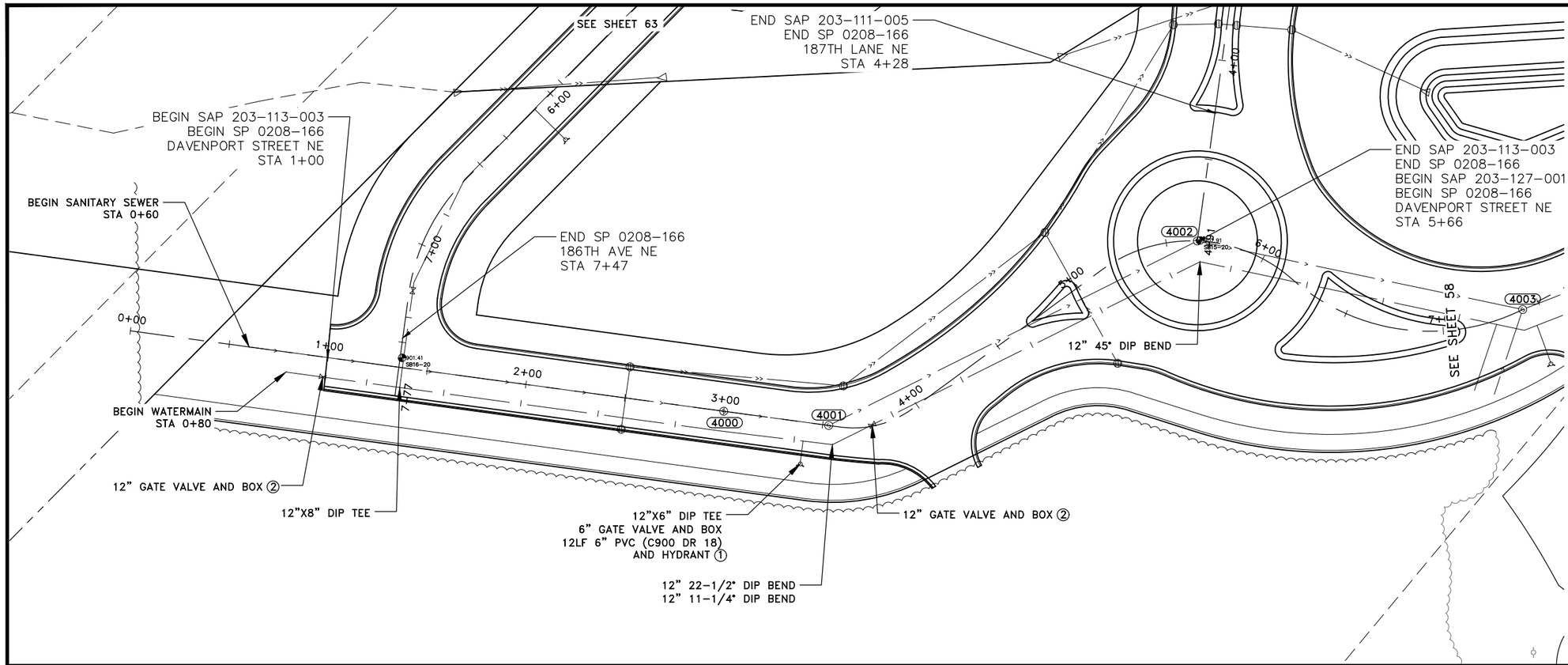

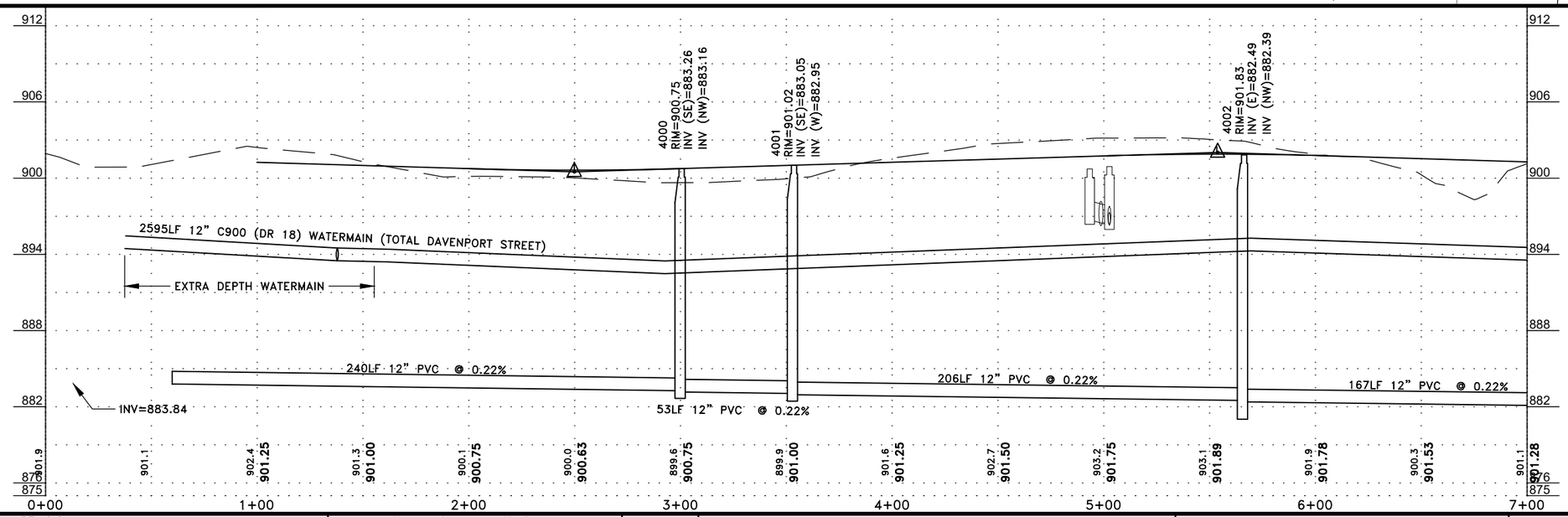

DATE	REVISION

I hereby certify that this plan, specification, or report was prepared by me or under my direct supervision and that I am a duly Licensed Professional Engineer under the laws of the State of Minnesota.

CRAIG J. JOCHUM, P.E.
Date 8/7/20 Lic. No. 23461

DESIGNED BY: CJJ
DRAWN BY: SGJ
CHECKED BY: TAE

Hakanson Anderson
Civil Engineers and Land Surveyors
3601 Thurston Ave., Anoka, Minnesota 55303
763-427-5860 FAX 763-427-0520
www.hakanson-anderson.com

STATE PROJ. NO 0208-166 (TH65=005)
SAP 203-127-001, SAP 203-111-005,
SAP 203-113-003

SANITARY SEWER AND WATERMAIN CONSTRUCTION
DAVENPORT STREET NE
TH 65 EAST SERVICE ROAD PROJECT

SHEET 57 OF 109 SHEETS

EB351

Aug 19, 2020 – 1:12pm
K:\MUNICIPAL\EB351\ENGINEERING\EB351_SAN.dwg

REFERENCE NOTES:

① CONSTRUCT HYDRANT PER CITY STANDARD [LATES 203 AND 204, AS SHOWN ON SHEET 42.

② CONSTRUCT VALVE PER CITY STANDARD PLATE NO 206, AS SHOWN ON SHEET 42.

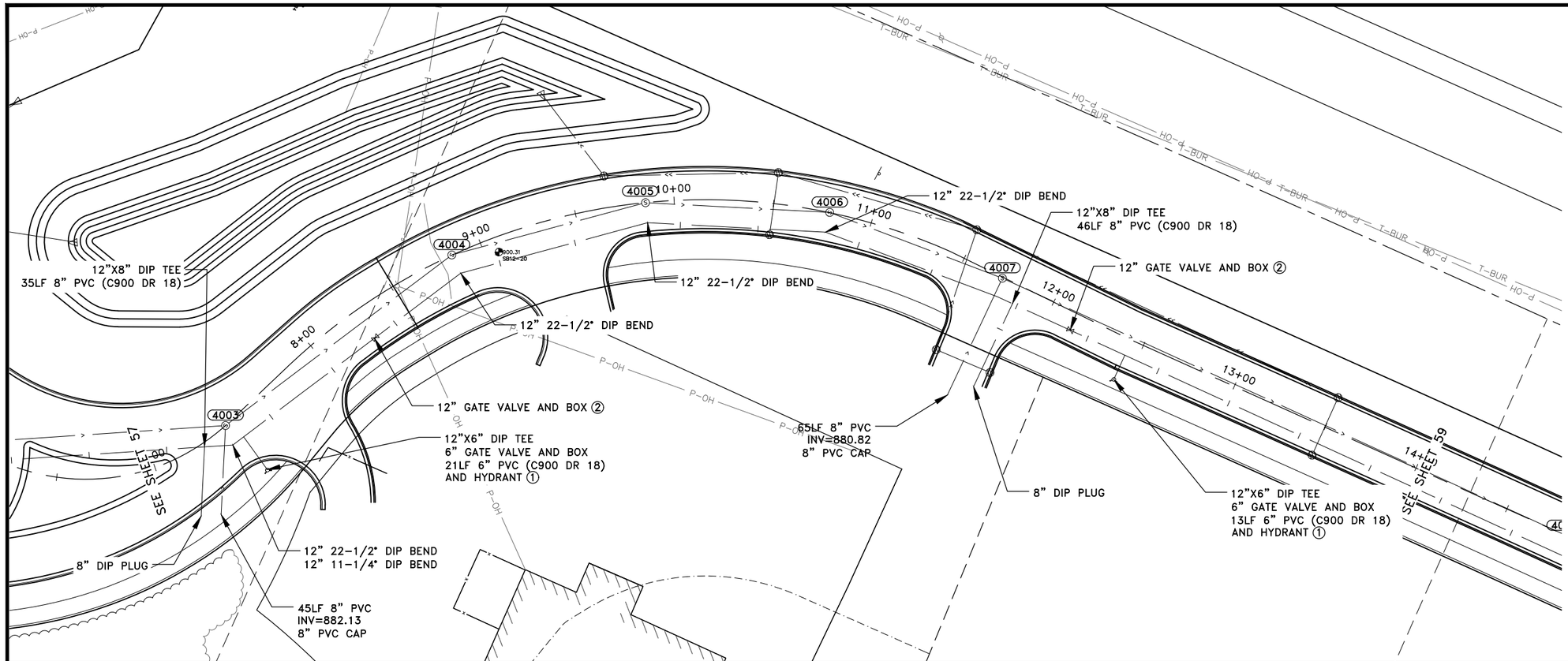

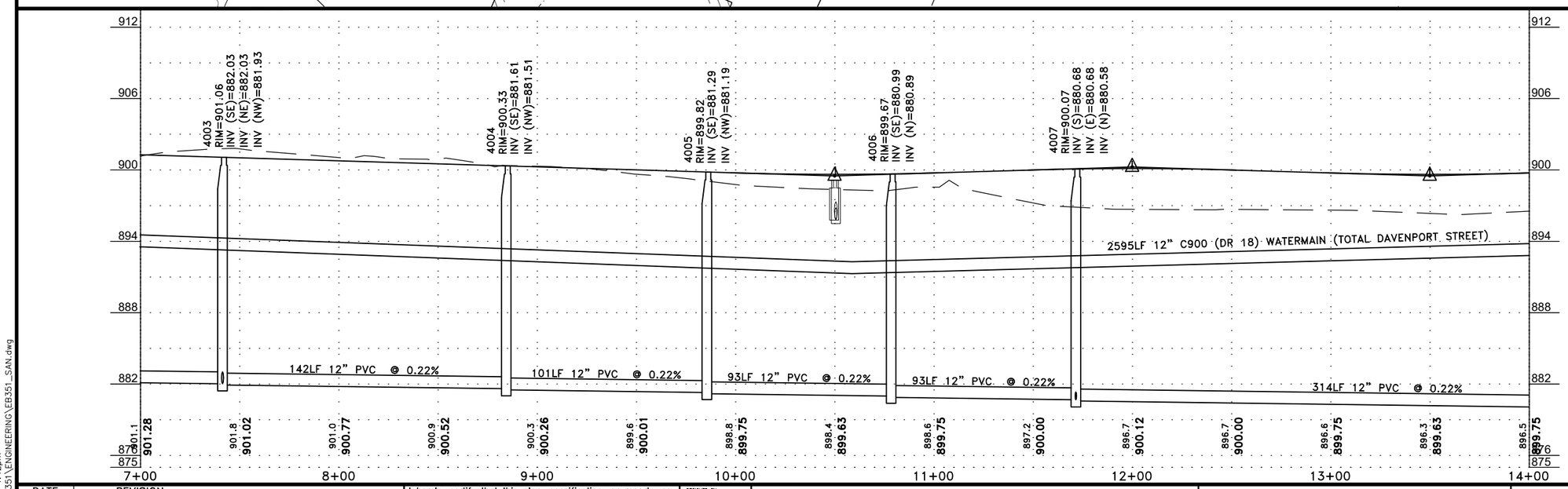

DATE	REVISION

I hereby certify that this plan, specification, or report was prepared by me or under my direct supervision and that I am a duly Licensed Professional Engineer under the laws of the State of Minnesota.

CRAIG J. JOCHUM, P.E.

Date 8/7/20 Lic. No. 23461

DESIGNED BY: CJJ
DRAWN BY: SGJ
CHECKED BY: TAE

Hakanson Anderson
Civil Engineers and Land Surveyors
3601 Thurston Ave., Anoka, Minnesota 55303
763-427-5860 FAX 763-427-0520
www.hakanson-anderson.com

STATE PROJ. NO 0208-166 (TH65=005)
SAP 203-127-001, SAP 203-111-005,
SAP 203-113-003

SANITARY SEWER AND WATERMAIN CONSTRUCTION
DAVENPORT STREET NE
TH 65 EAST SERVICE ROAD PROJECT

Aug 19, 2020 – 1:12pm
K:\MUNICIPAL\EB351\ENGINEERING\EB351_SAN.dwg

REFERENCE NOTES:

1. CONSTRUCT HYDRANT PER CITY STANDARD [LATES 203 AND 204, AS SHOWN ON SHEET 42.
2. CONSTRUCT VALVE PER CITY STANDARD PLATE NO 206, AS SHOWN ON SHEET 42.

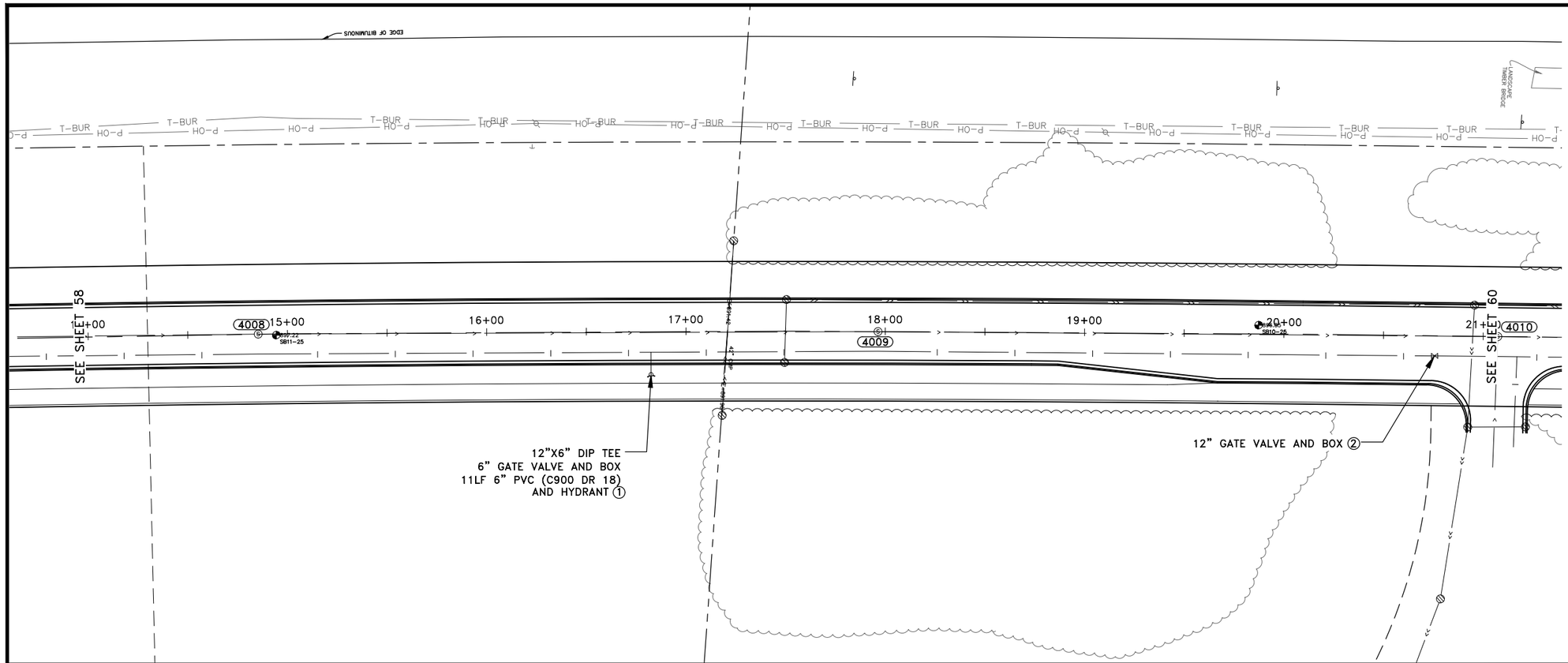

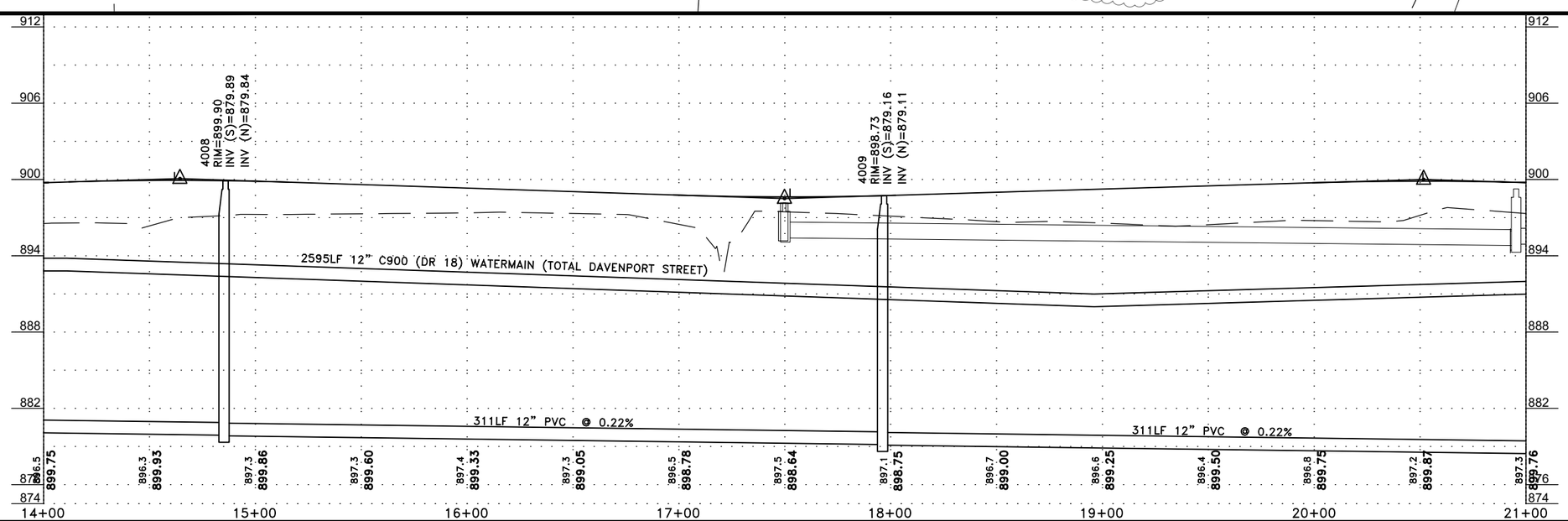

DATE	REVISION

I hereby certify that this plan, specification, or report was prepared by me or under my direct supervision and that I am a duly Licensed Professional Engineer under the laws of the State of Minnesota.

Date 8/7/20 CRAIG J. JOCHUM, P.E. Lic. No. 23461

DESIGNED BY: CJJ
DRAWN BY: SGJ
CHECKED BY: TAE

Hakanson Anderson
Civil Engineers and Land Surveyors
3601 Thurston Ave., Anoka, Minnesota 55303
763-427-5860 FAX 763-427-0520
www.hakanson-anderson.com

STATE PROJ. NO 0208-166 (TH65=005)
SAP 203-127-001, SAP 203-111-005,
SAP 203-113-003

SANITARY SEWER AND WATERMAIN CONSTRUCTION
DAVENPORT STREET NE
TH 65 EAST SERVICE ROAD PROJECT

EB351

Aug 19, 2020 - 1:13pm
K:\MUNICIPAL\EB351\ENGINEERING\EB351_SAN.dwg

REFERENCE NOTES:

① CONSTRUCT HYDRANT PER CITY STANDARD [LATES 203 AND 204, AS SHOWN ON SHEET 42.

② CONSTRUCT VALVE PER CITY STANDARD PLATE NO 206, AS SHOWN ON SHEET 42.

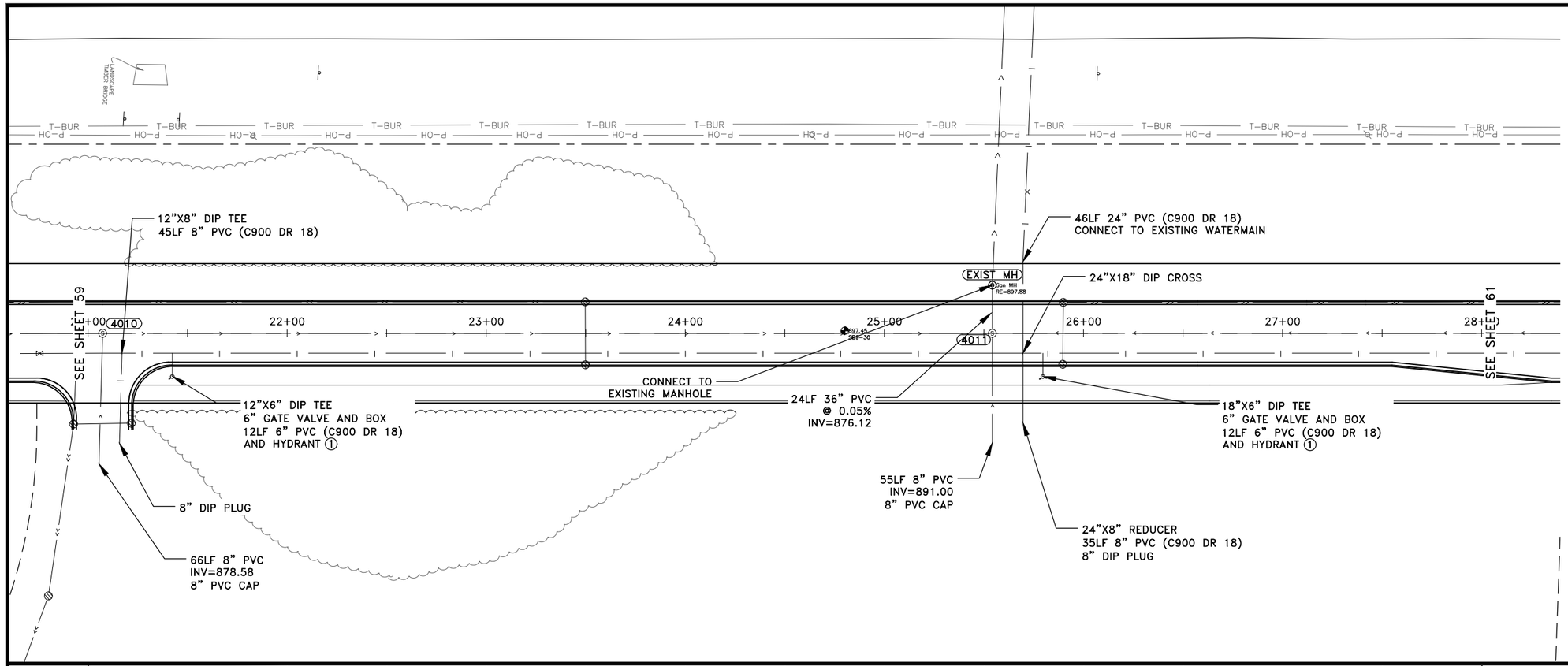

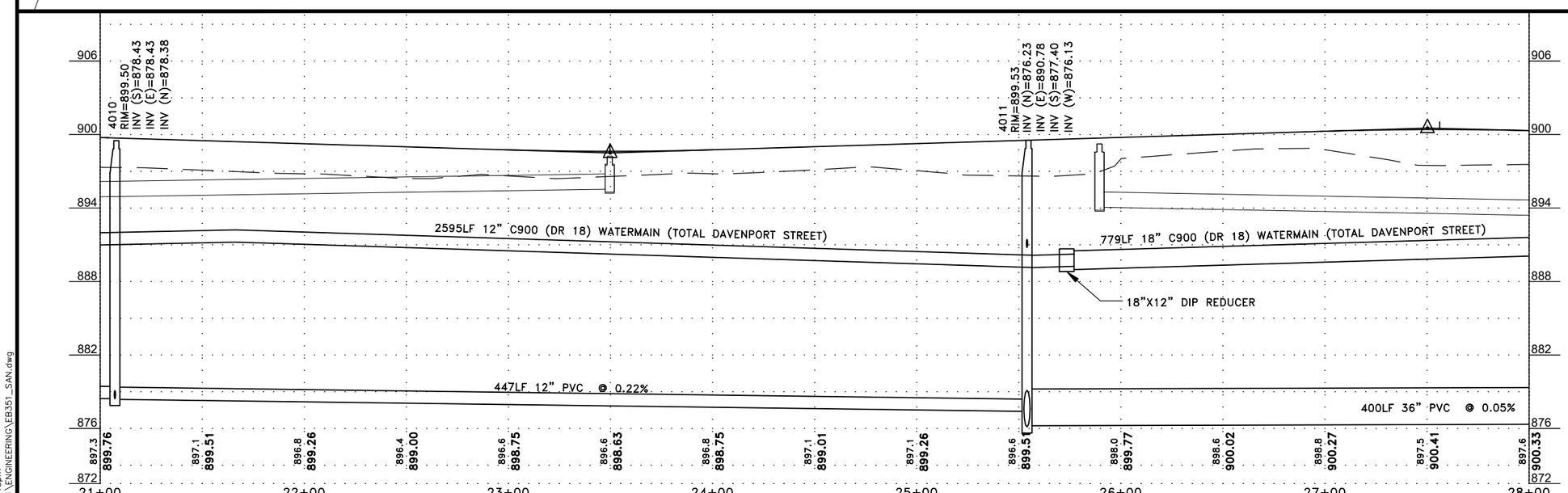

DATE	REVISION

I hereby certify that this plan, specification, or report was prepared by me or under my direct supervision and that I am a duly Licensed Professional Engineer under the laws of the State of Minnesota.

Date 8/7/20 CRAIG J. JOCHUM, P.E. Lic. No. 23461

DESIGNED BY: CJJ
DRAWN BY: SGJ
CHECKED BY: TAE

Hakanson Anderson
Civil Engineers and Land Surveyors
3601 Thurston Ave., Anoka, Minnesota 55303
763-427-5860 FAX 763-427-0520
www.hakanson-anderson.com

STATE PROJ. NO 0208-166 (TH65=005)
SAP 203-127-001, SAP 203-111-005,
SAP 203-113-003

SANITARY SEWER AND WATERMAIN CONSTRUCTION
DAVENPORT STREET NE
TH 65 EAST SERVICE ROAD PROJECT

EB351

Aug 19, 2020 – 1:13pm
K:\MUNICIPAL\EB351\ENGINEERING\EB351_SAN.dwg

REFERENCE NOTES:

1. CONSTRUCT HYDRANT PER CITY STANDARD [LATES 203 AND 204, AS SHOWN ON SHEET 42.
2. CONSTRUCT VALVE PER CITY STANDARD PLATE NO 206, AS SHOWN ON SHEET 42.
3. WATERMAIN NOT IN PROFILE.

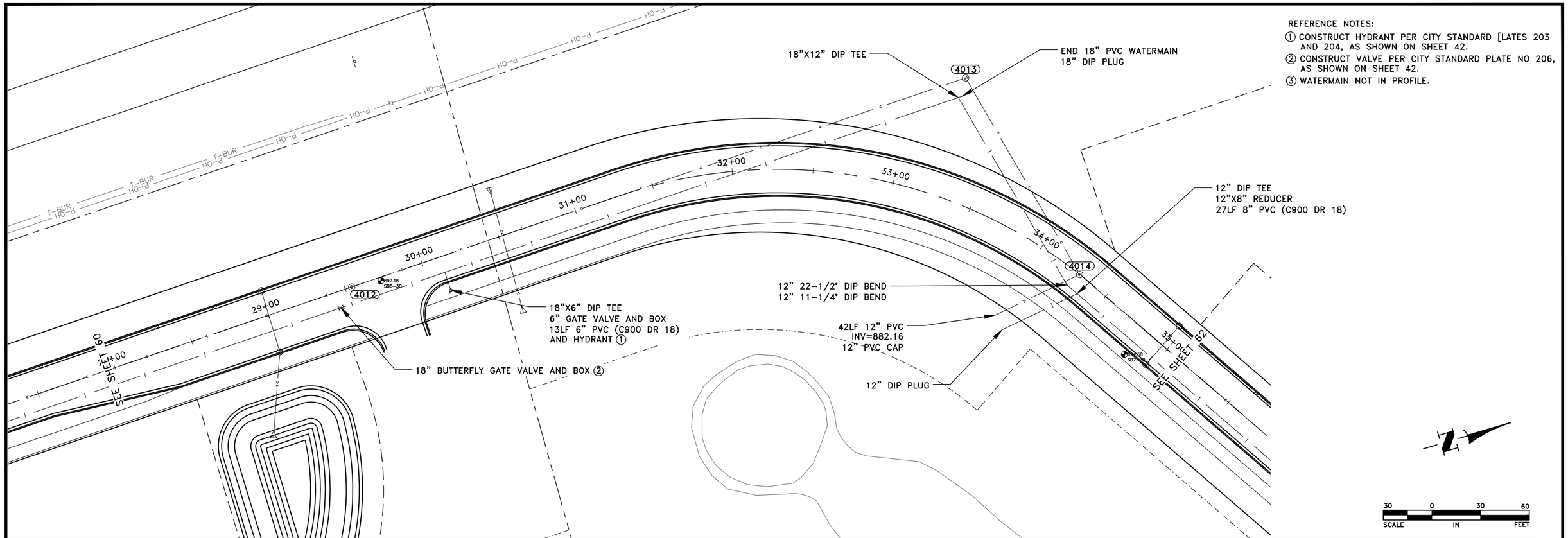

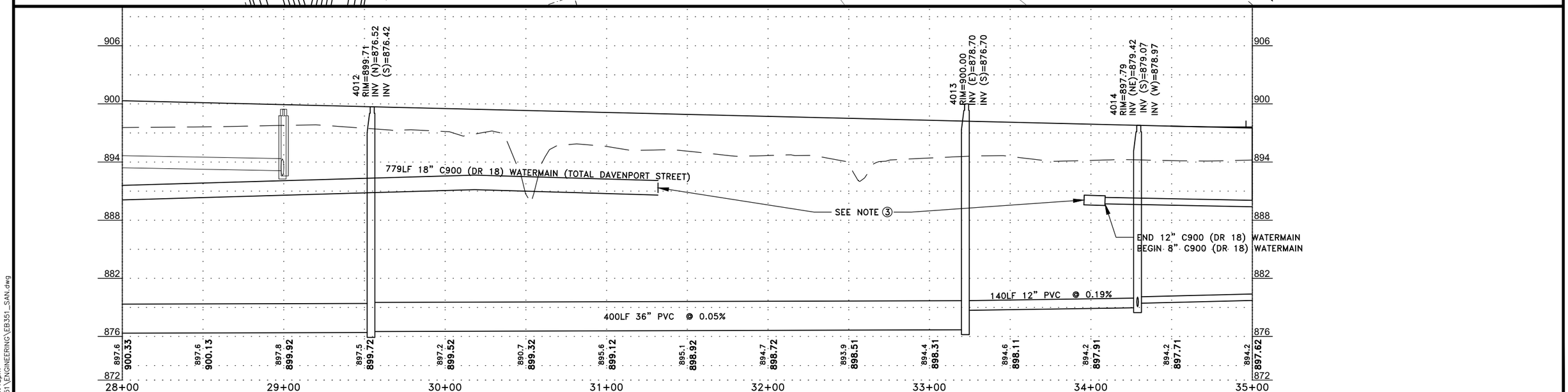

DATE	REVISION

I hereby certify that this plan, specification, or report was prepared by me or under my direct supervision and that I am a duly Licensed Professional Engineer under the laws of the State of Minnesota.

CRAIG J. JOCHUM, P.E.

Date 8/7/20 Lic. No. 23461

DESIGNED BY: CJJ
DRAWN BY: SGJ
CHECKED BY: TAE

Hakanson Anderson
Civil Engineers and Land Surveyors
3601 Thurston Ave., Anoka, Minnesota 55303
763-427-5860 FAX 763-427-0520
www.hakanson-anderson.com

STATE PROJ. NO 0208-166 (TH65=005)
SAP 203-127-001, SAP 203-111-005,
SAP 203-113-003

SANITARY SEWER AND WATERMAIN CONSTRUCTION
DAVENPORT STREET NE
TH 65 EAST SERVICE ROAD PROJECT

EB351

Aug 19, 2020 – 1:13pm
K:\MUNICIPAL\EB351\ENGINEERING\EB351_SAN.dwg

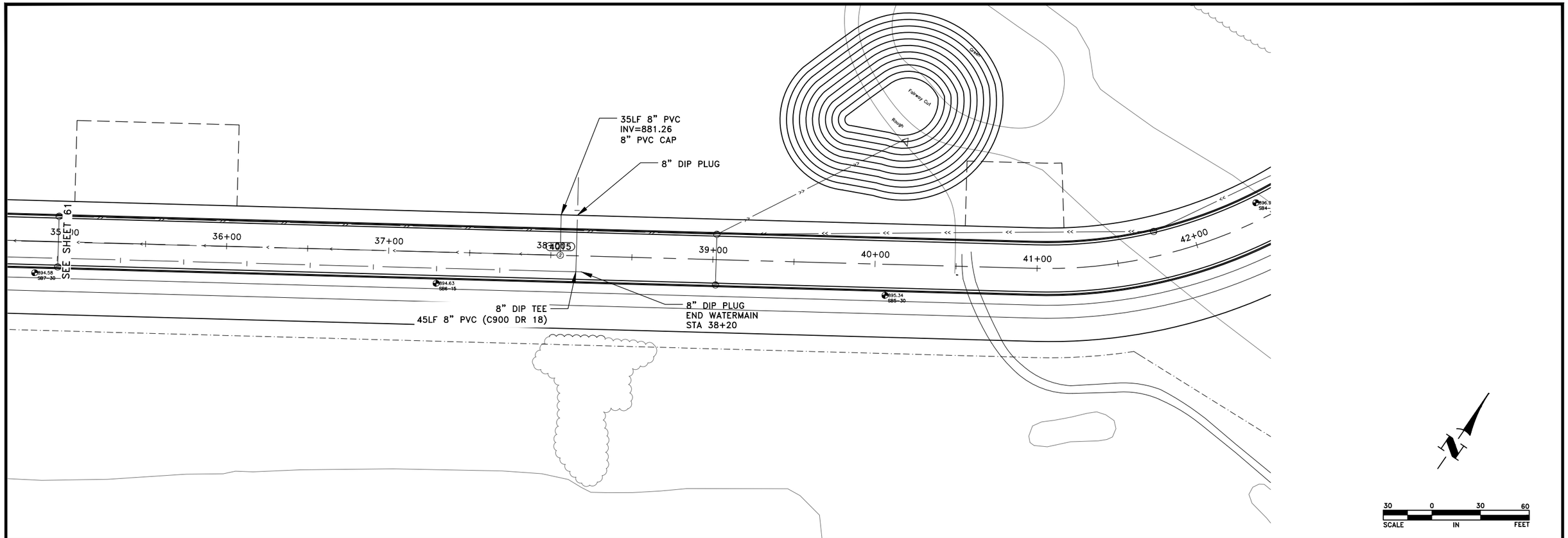

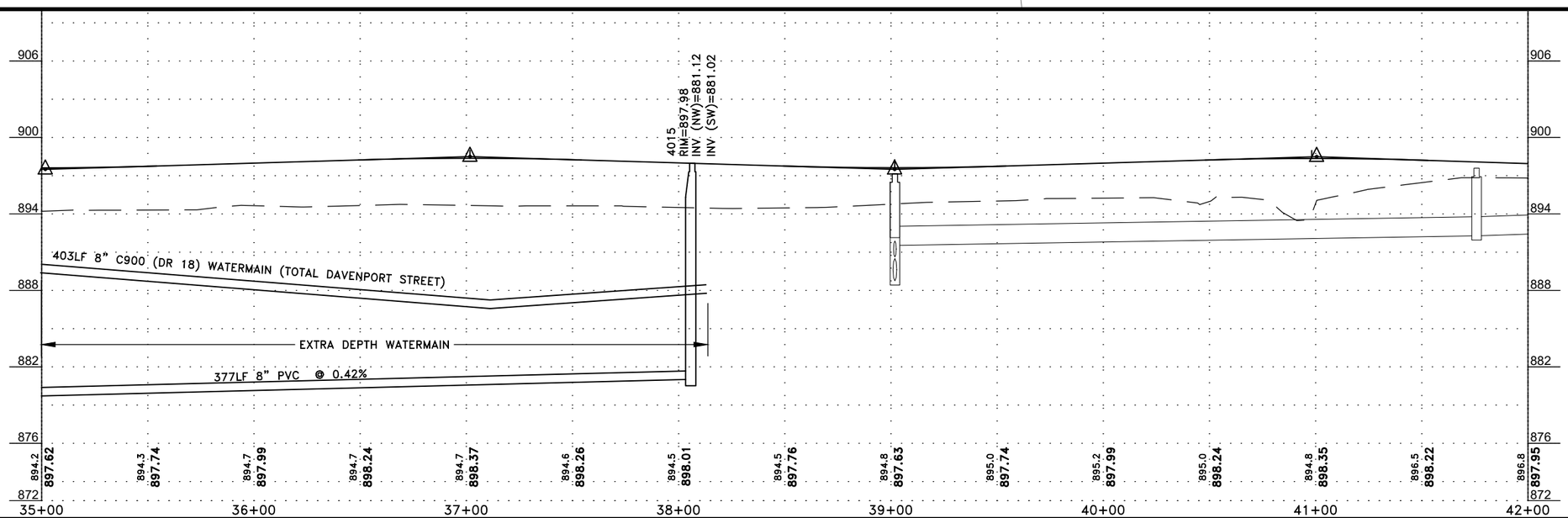

DATE	REVISION

I hereby certify that this plan, specification, or report was prepared by me or under my direct supervision and that I am a duly Licensed Professional Engineer under the laws of the State of Minnesota.

CRAIG J. JOCHUM, P.E.
Date 8/7/20 Lic. No. 23461

DESIGNED BY: CJJ
DRAWN BY: SGJ
CHECKED BY: TAE

Hakanson Anderson
Civil Engineers and Land Surveyors
3601 Thurston Ave., Anoka, Minnesota 55303
763-427-5860 FAX 763-427-0520
www.hakanson-anderson.com

STATE PROJ. NO 0208-166 (TH65=005)
SAP 203-127-001, SAP 203-111-005,
SAP 203-113-003

SANITARY SEWER AND WATERMAIN CONSTRUCTION
DAVENPORT STREET NE
TH 65 EAST SERVICE ROAD PROJECT

Aug 19, 2020 – 1:13pm
K:\MUNICIPAL\EB351\ENGINEERING\EB351_SAN.dwg

REFERENCE NOTES:

① CONSTRUCT HYDRANT PER CITY STANDARD [LATES 203 AND 204, AS SHOWN ON SHEET 42.

② CONSTRUCT VALVE PER CITY STANDARD PLATE NO 206, AS SHOWN ON SHEET 42.

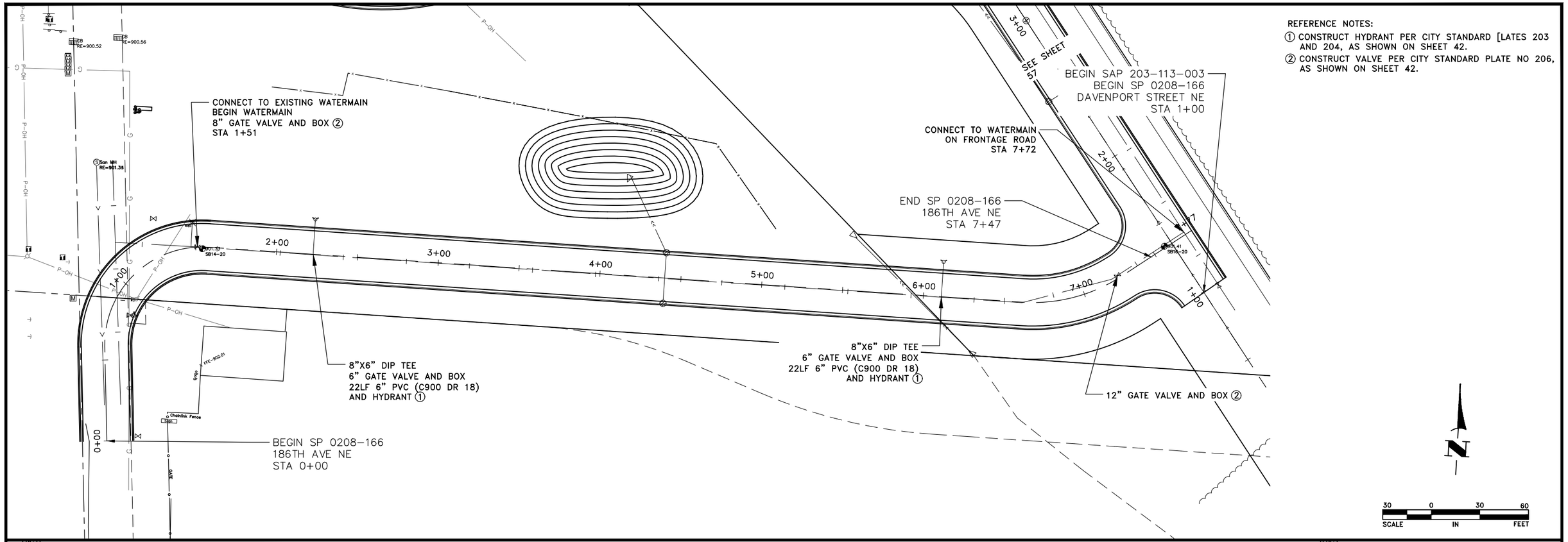

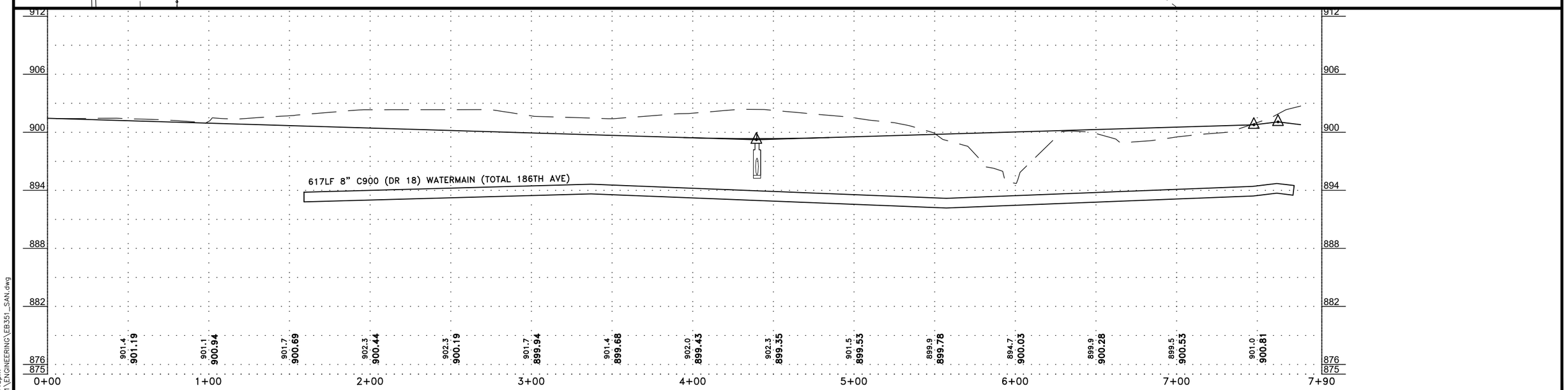

DATE	REVISION

I hereby certify that this plan, specification, or report was prepared by me or under my direct supervision and that I am a duly Licensed Professional Engineer under the laws of the State of Minnesota.

CRAIG J. JOCHUM, P.E.

Date 8/7/20 Lic. No. 23461

DESIGNED BY: CJJ
DRAWN BY: SGJ
CHECKED BY: TAE

Hakanson Anderson
Civil Engineers and Land Surveyors
3601 Thurston Ave., Anoka, Minnesota 55303
763-427-5860 FAX 763-427-0520
www.hakanson-anderson.com

STATE PROJ. NO 0208-166 (TH65=005)
SAP 203-127-001, SAP 203-111-005,
SAP 203-113-003

SANITARY SEWER AND WATERMAIN CONSTRUCTION
186TH AVE NE
TH 65 EAST SERVICE ROAD PROJECT

Aug 19, 2020 – 1:13pm
K:\MUNICIPAL\EB351\ENGINEERING\EB351_SAN.dwg

EB351

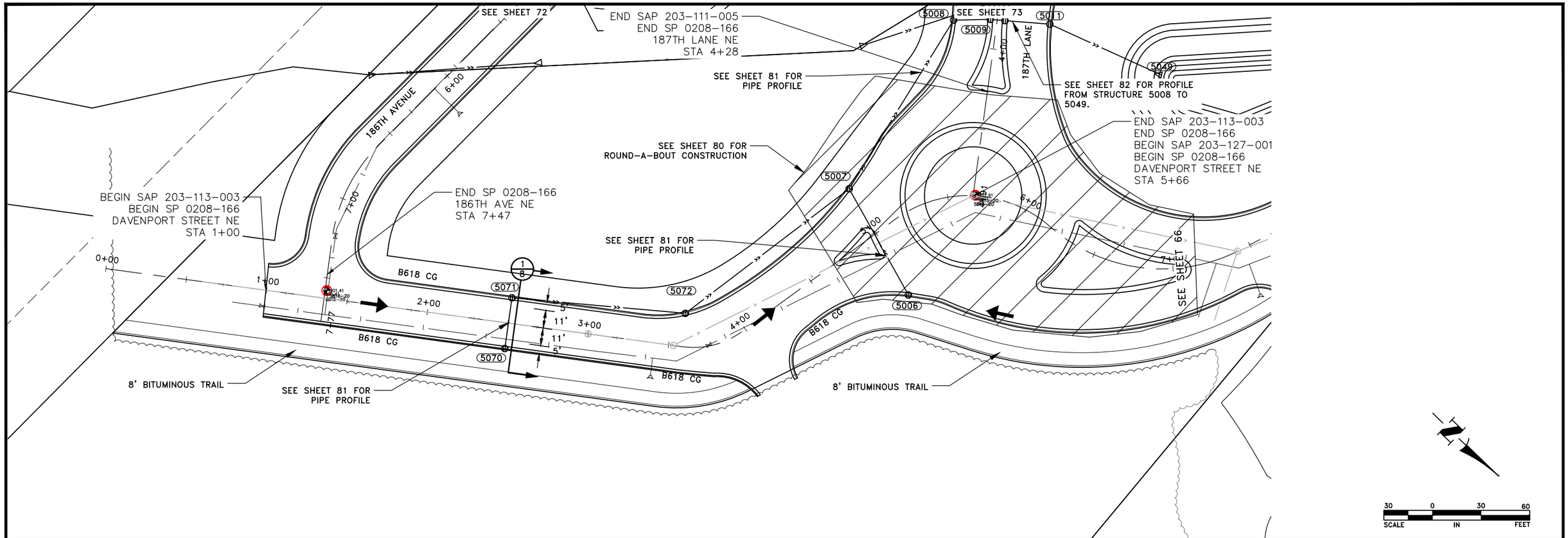

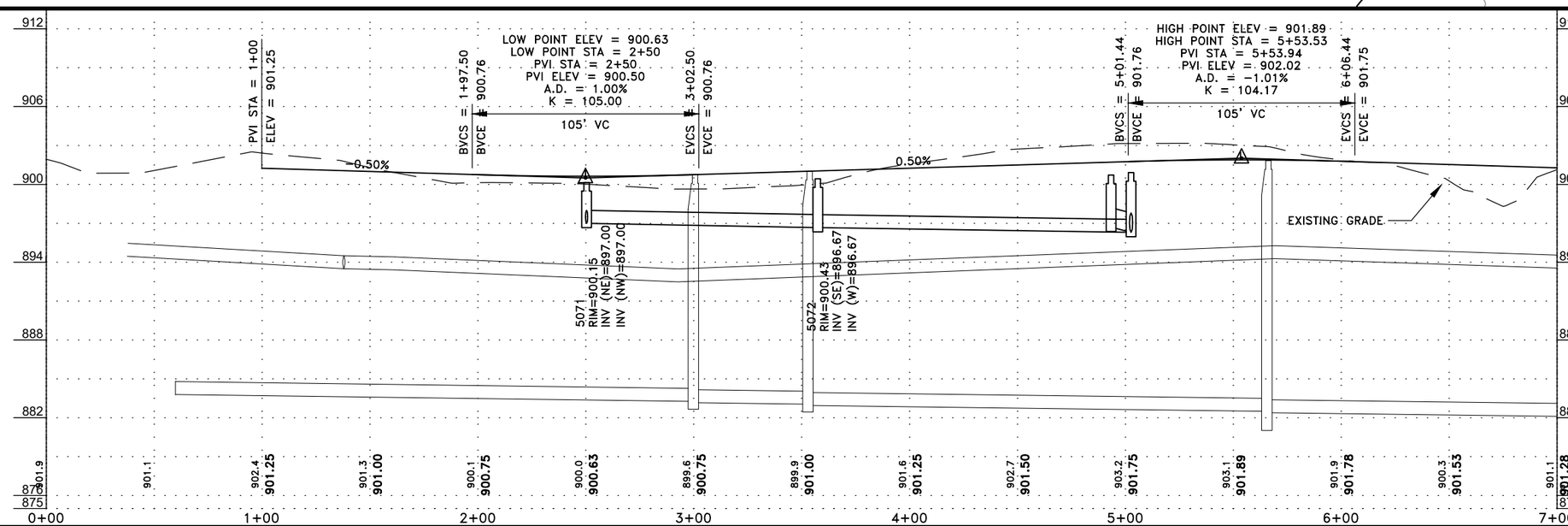

DATE	REVISION

I hereby certify that this plan, specification, or report was prepared by me or under my direct supervision and that I am a duly Licensed Professional Engineer under the laws of the State of Minnesota.

CRAIG J. JOCHUM, P.E.
Date 8/7/20 Lic. No. 23461

DESIGNED BY: CJJ
DRAWN BY: SGJ
CHECKED BY: TAE

Hakanson Anderson
Civil Engineers and Land Surveyors
3601 Thurston Ave., Anoka, Minnesota 55303
763-427-5860 FAX 763-427-0520
www.hakanson-anderson.com

STATE PROJ. NO 0208-166 (TH65=005)
SAP 203-127-001, SAP 203-111-005,
SAP 203-113-003

STREET AND DRAINAGE CONSTRUCTION

DAVENPORT STREET NE
TH 65 EAST SERVICE ROAD PROJECT

SHEET 65 OF 109 SHEETS

EB351

Aug 19, 2020 – 1:14pm
K:\MUNICIPAL\EB351\ENGINEERING\EB351_PP.dwg

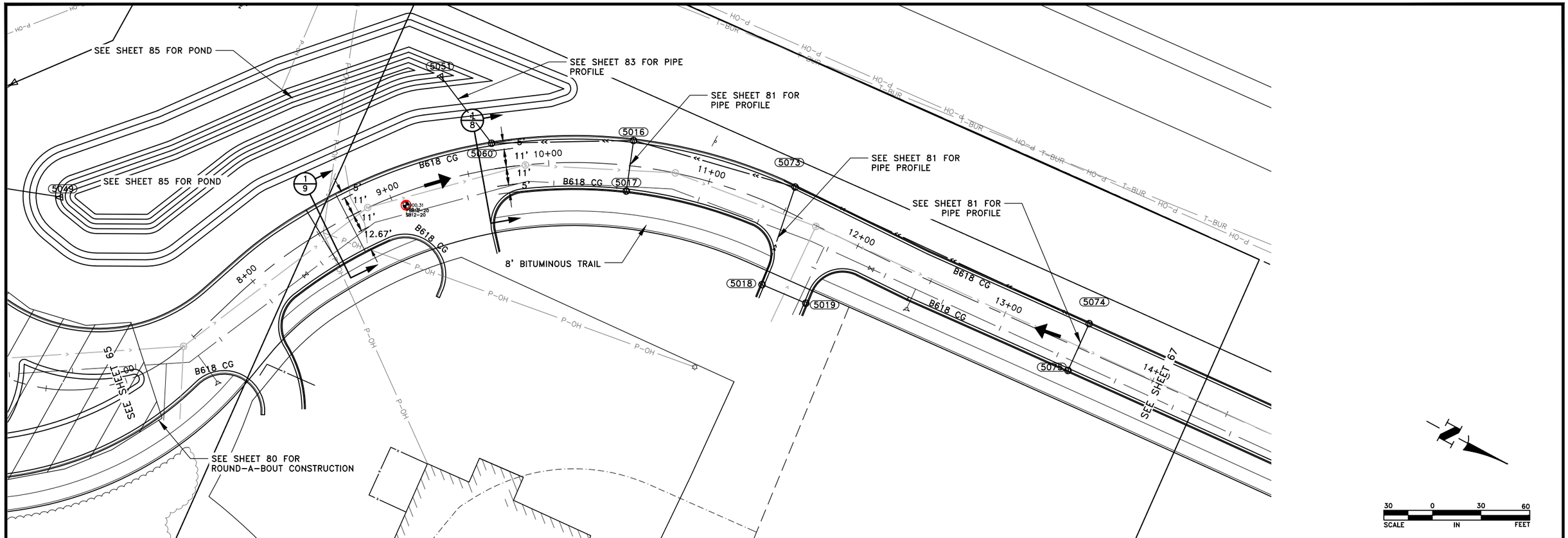

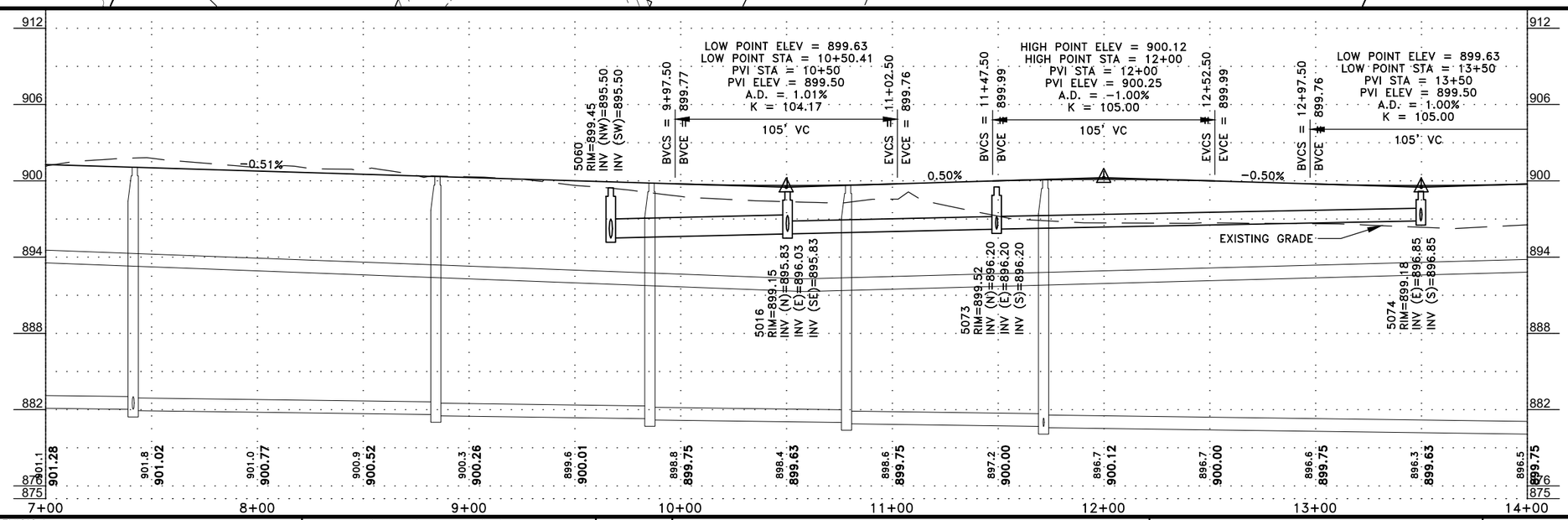

DATE	REVISION

I hereby certify that this plan, specification, or report was prepared by me or under my direct supervision and that I am a duly Licensed Professional Engineer under the laws of the State of Minnesota.

CRAIG J. JOCHUM, P.E.
Date 8/7/20 Lic. No. 23461

DESIGNED BY: CJJ
DRAWN BY: SGJ
CHECKED BY: TAE

Hakanson Anderson
Civil Engineers and Land Surveyors
3601 Thurston Ave., Anoka, Minnesota 55303
763-427-5860 FAX 763-427-0520
www.hakanson-anderson.com

STATE PROJ. NO 0208-166 (TH65=005)
SAP 203-127-001, SAP 203-111-005,
SAP 203-113-003

STREET AND DRAINAGE CONSTRUCTION

DAVENPORT STREET NE
TH 65 EAST SERVICE ROAD PROJECT

SHEET 66 OF 109 SHEETS

EB351

Aug 19, 2020 – 1:14pm
K:\MUNICIPAL\EB351\ENGINEERING\EB351_PP.dwg

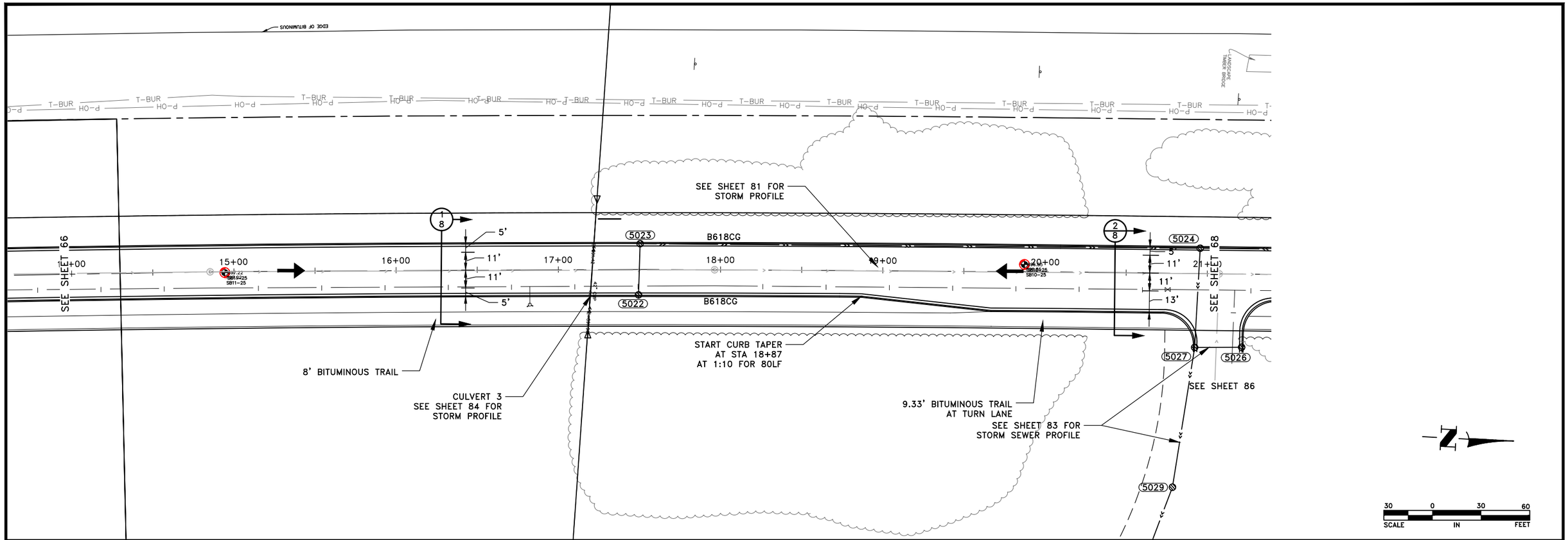

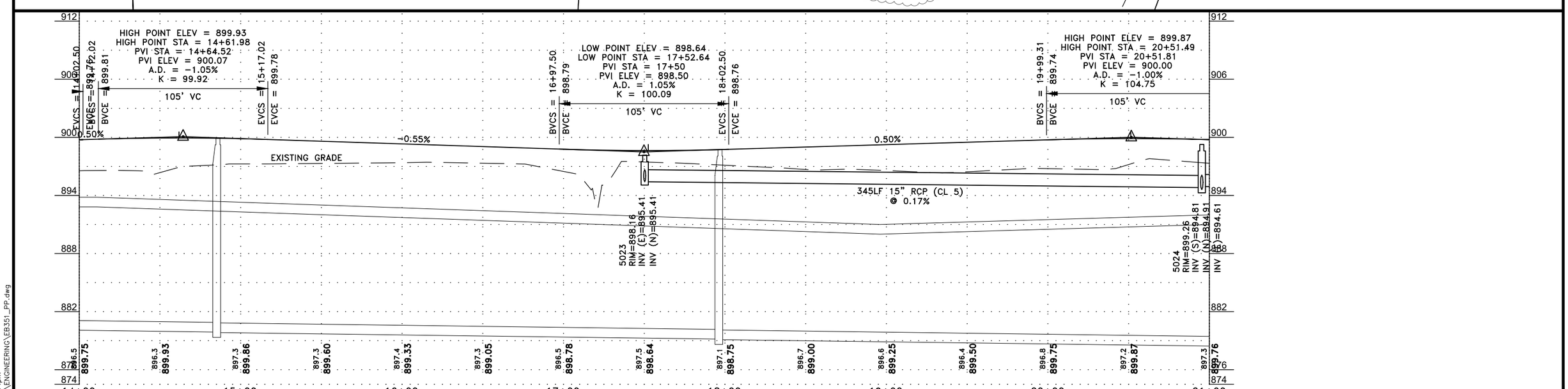

DATE	REVISION

I hereby certify that this plan, specification, or report was prepared by me or under my direct supervision and that I am a duly Licensed Professional Engineer under the laws of the State of Minnesota.

Date 8/7/20 CRAIG J. JOCHUM, P.E. Lic. No. 23461

DESIGNED BY: CJJ
DRAWN BY: SGJ
CHECKED BY: TAE

Hakanson Anderson
Civil Engineers and Land Surveyors
3601 Thurston Ave., Anoka, Minnesota 55303
763-427-5860 FAX 763-427-0520
www.hakanson-anderson.com

STATE PROJ. NO 0208-166 (TH65=005)
SAP 203-127-001, SAP 203-111-005,
SAP 203-113-003

STREET AND DRAINAGE CONSTRUCTION

DAVENPORT STREET NE
TH 65 EAST SERVICE ROAD PROJECT

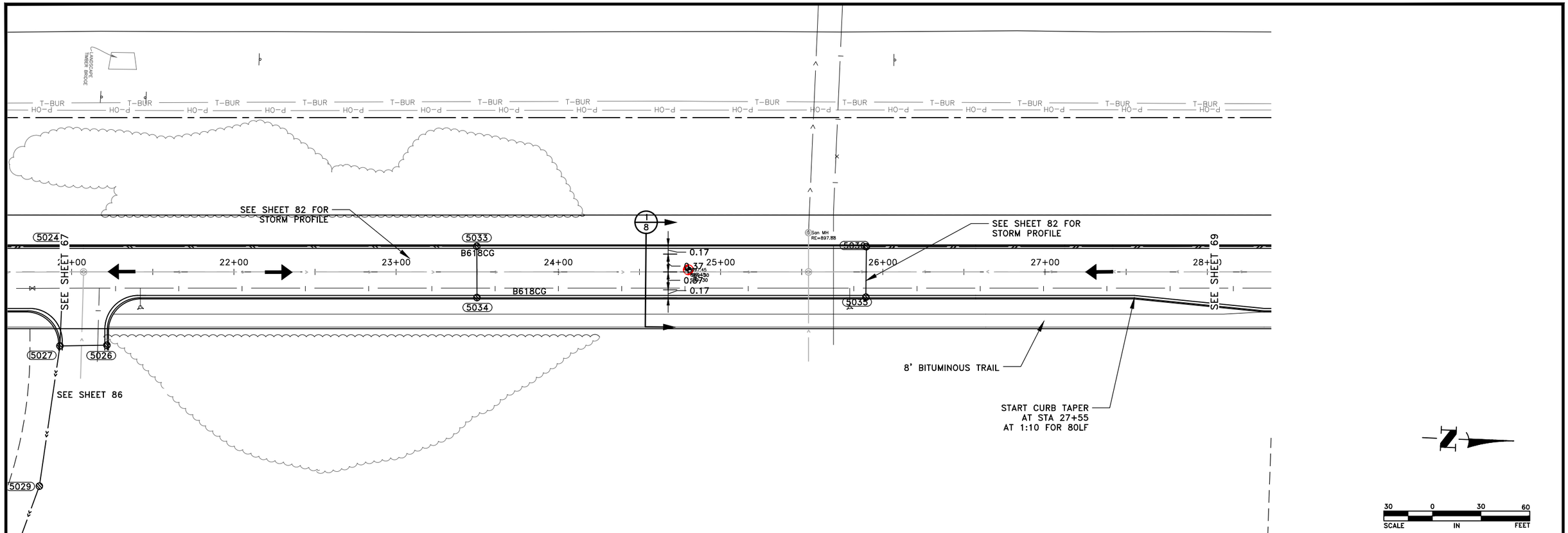

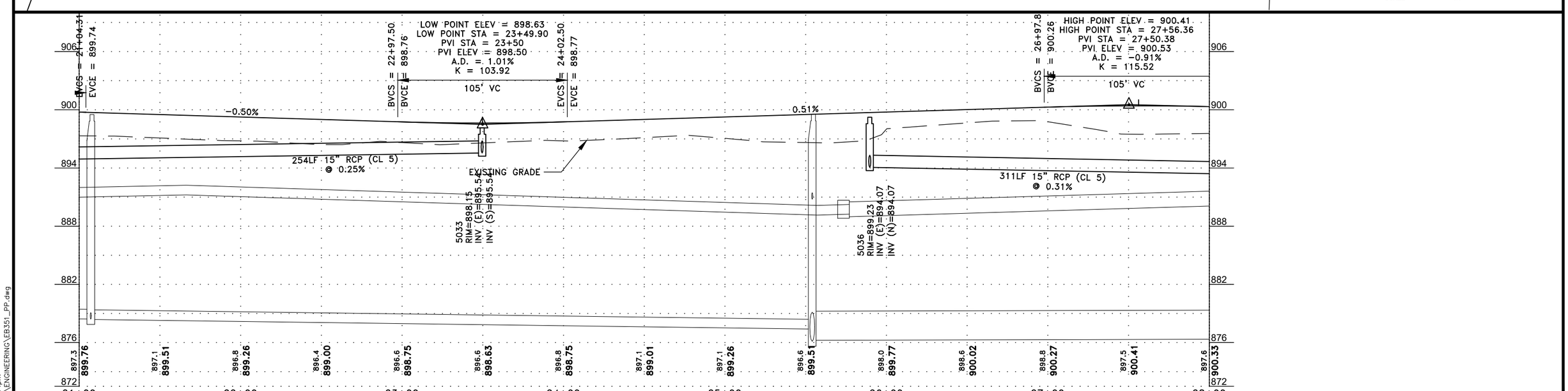

DATE	REVISION

I hereby certify that this plan, specification, or report was prepared by me or under my direct supervision and that I am a duly Licensed Professional Engineer under the laws of the State of Minnesota.

CRAIG J. JOCHUM, P.E.
Date 8/7/20 Lic. No. 23461

DESIGNED BY: CJJ
DRAWN BY: SGJ
CHECKED BY: TAE

Hakanson Anderson
Civil Engineers and Land Surveyors
3601 Thurston Ave., Anoka, Minnesota 55303
763-427-5860 FAX 763-427-0520
www.hakanson-anderson.com

STATE PROJ. NO 0208-166 (TH65=005)
SAP 203-127-001, SAP 203-111-005,
SAP 203-113-003

STREET AND DRAINAGE CONSTRUCTION

DAVENPORT STREET NE
TH 65 EAST SERVICE ROAD PROJECT

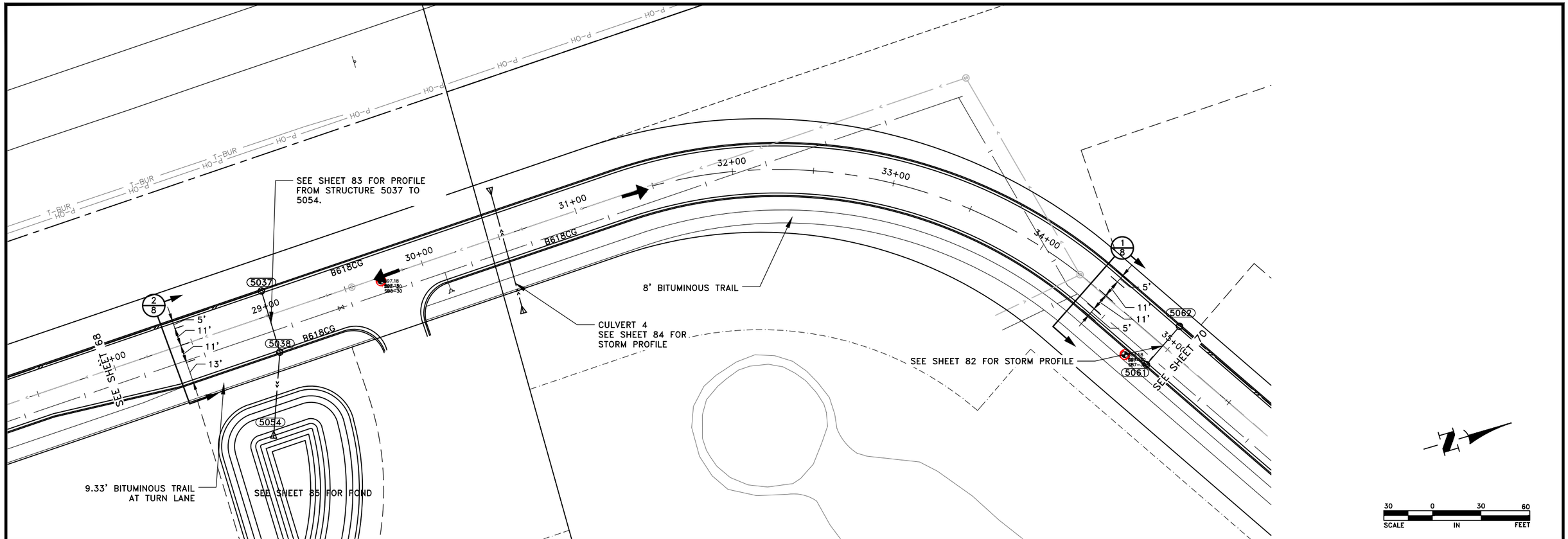

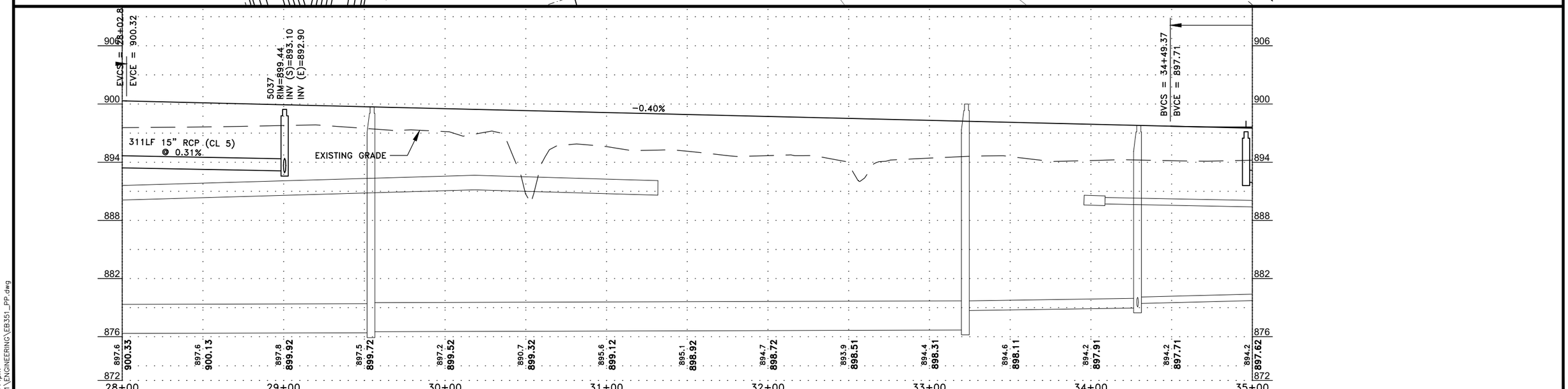

DATE	REVISION

I hereby certify that this plan, specification, or report was prepared by me or under my direct supervision and that I am a duly Licensed Professional Engineer under the laws of the State of Minnesota.

CRAIG J. JOCHUM, P.E.
Date 8/7/20 Lic. No. 23461

DESIGNED BY: CJJ
DRAWN BY: SGJ
CHECKED BY: TAE

Hakanson Anderson
Civil Engineers and Land Surveyors
3601 Thurston Ave., Anoka, Minnesota 55303
763-427-5860 FAX 763-427-0520
www.hakanson-anderson.com

STATE PROJ. NO 0208-166 (TH65=005)
SAP 203-127-001, SAP 203-111-005,
SAP 203-113-003

STREET AND DRAINAGE CONSTRUCTION

DAVENPORT STREET NE
TH 65 EAST SERVICE ROAD PROJECT

SHEET 69 OF 109 SHEETS

EB351

Aug 19, 2020 – 1:14pm
K:\MUNICIPAL\EB351\ENGINEERING\EB351_PP.dwg

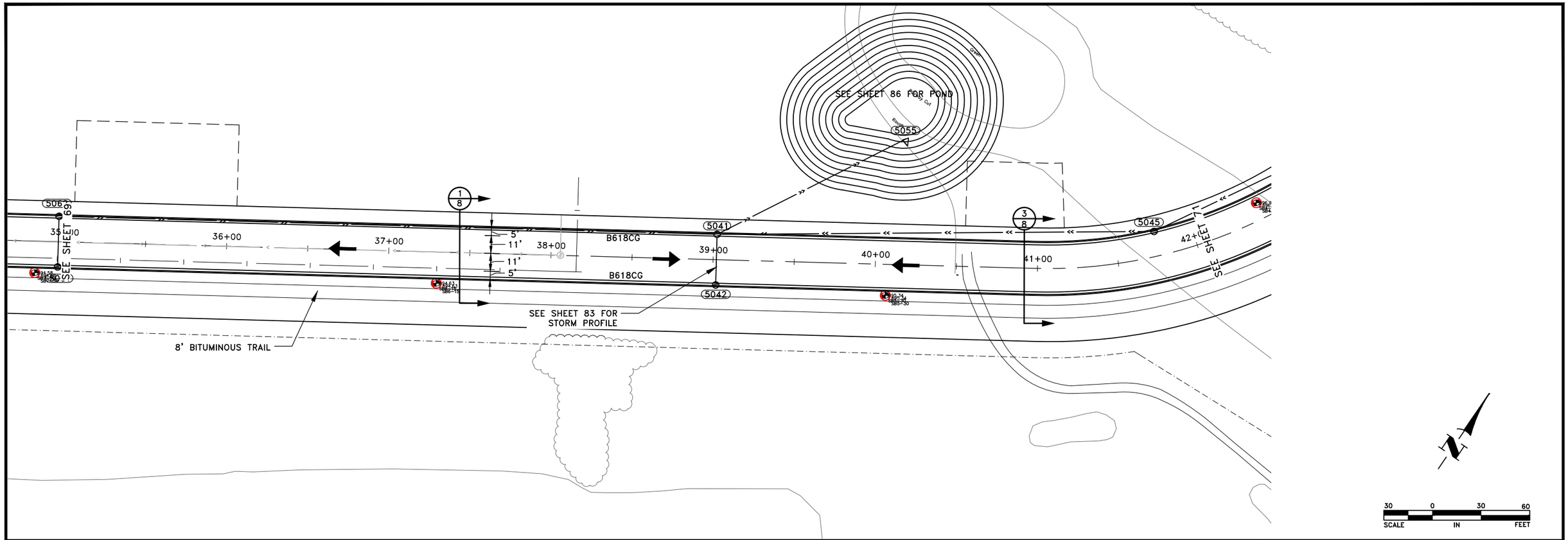

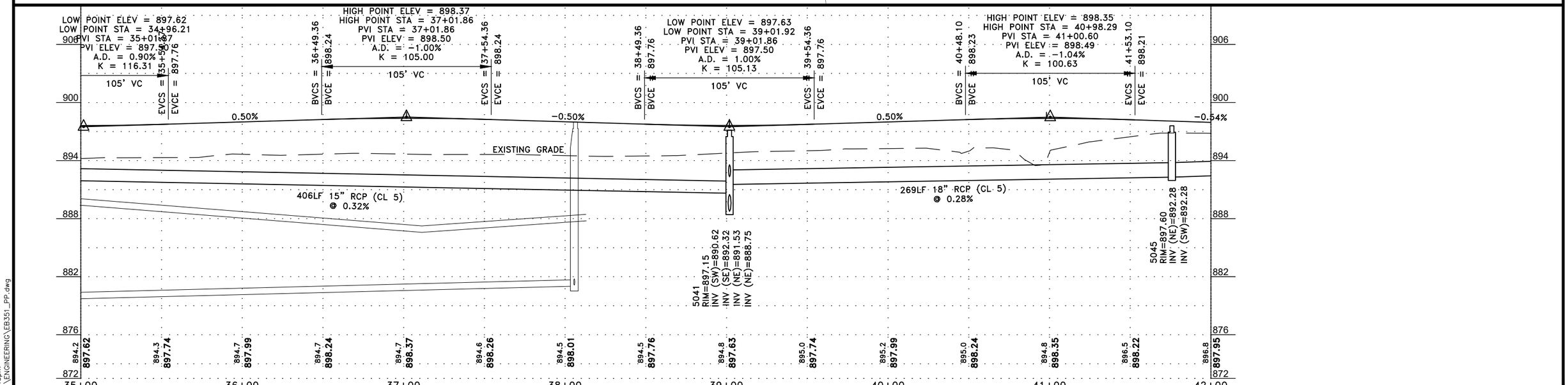

DATE	REVISION

I hereby certify that this plan, specification, or report was prepared by me or under my direct supervision and that I am a duly Licensed Professional Engineer under the laws of the State of Minnesota.

Date 8/7/20 CRAIG J. JOCHUM, P.E. Lic. No. 23461

DESIGNED BY: CJJ
DRAWN BY: SGJ
CHECKED BY: TAE

Hakanson Anderson
Civil Engineers and Land Surveyors
3601 Thurston Ave., Anoka, Minnesota 55303
763-427-5860 FAX 763-427-0520
www.hakanson-anderson.com

STATE PROJ. NO 0208-166 (TH65=005)
SAP 203-127-001, SAP 203-111-005,
SAP 203-113-003

STREET AND DRAINAGE CONSTRUCTION

DAVENPORT STREET NE
TH 65 EAST SERVICE ROAD PROJECT

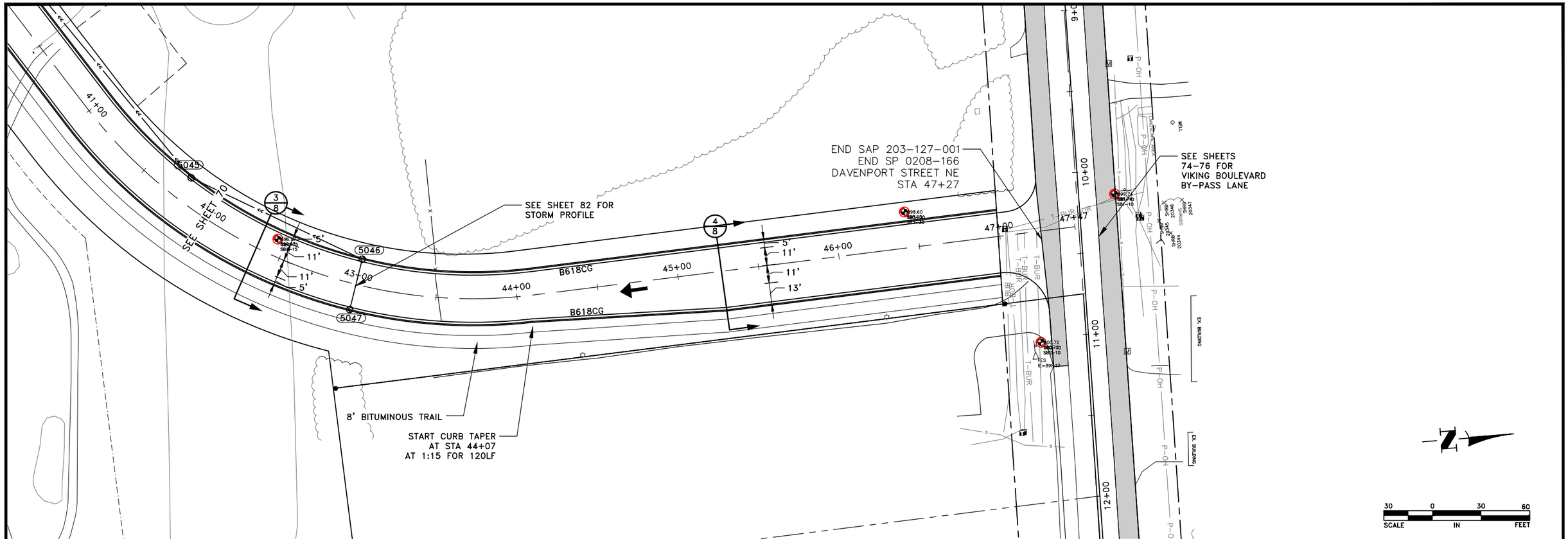

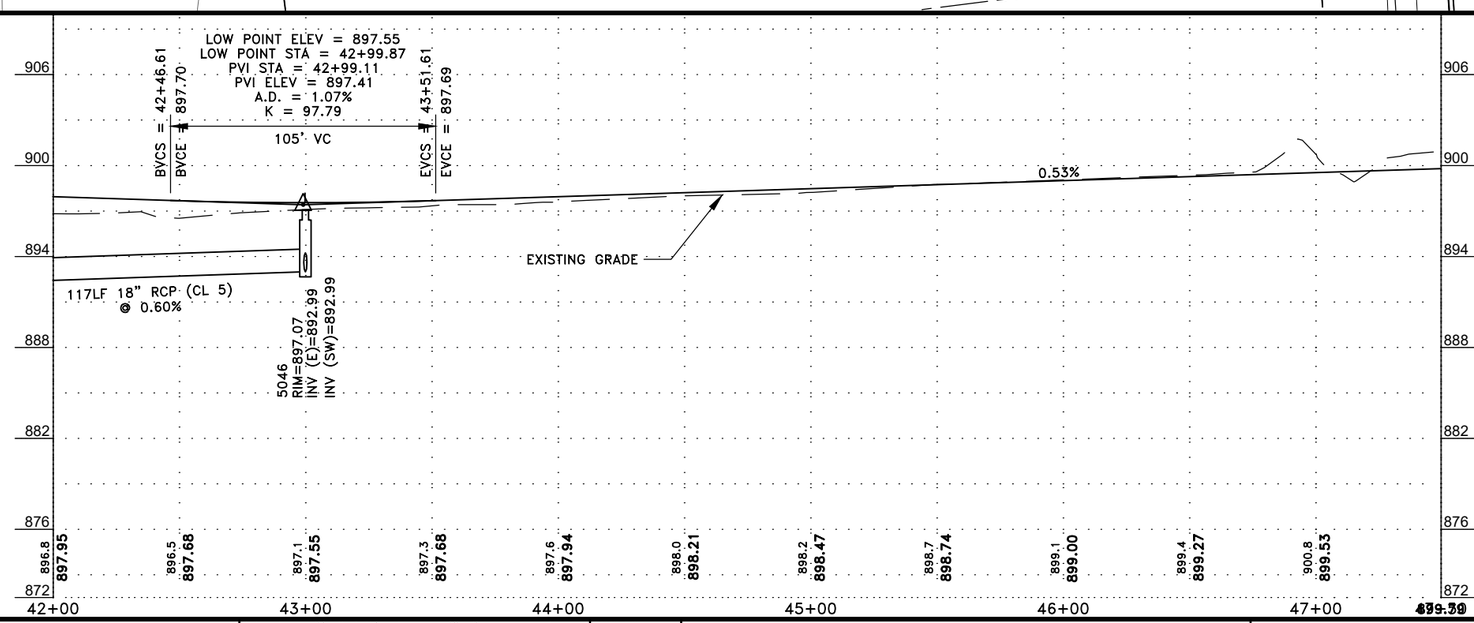

DATE	REVISION

I hereby certify that this plan, specification, or report was prepared by me or under my direct supervision and that I am a duly Licensed Professional Engineer under the laws of the State of Minnesota.

CRAIG J. JOCHUM, P.E.
Date 8/7/20 Lic. No. 23461

DESIGNED BY: CJJ
DRAWN BY: SGJ
CHECKED BY: TAE

Hakanson Anderson
Civil Engineers and Land Surveyors
3601 Thurston Ave., Anoka, Minnesota 55303
763-427-5860 FAX 763-427-0520
www.hakanson-anderson.com

STATE PROJ. NO 0208-166 (TH65=005)
SAP 203-127-001, SAP 203-111-005,
SAP 203-113-003

STREET AND DRAINAGE CONSTRUCTION

DAVENPORT STREET NE
TH 65 EAST SERVICE ROAD PROJECT

SHEET 71 OF 109 SHEETS

EB351

Aug 19, 2020 – 1:15pm
K:\MUNICIPAL\EB351\ENGINEERING\EB351_PP.dwg

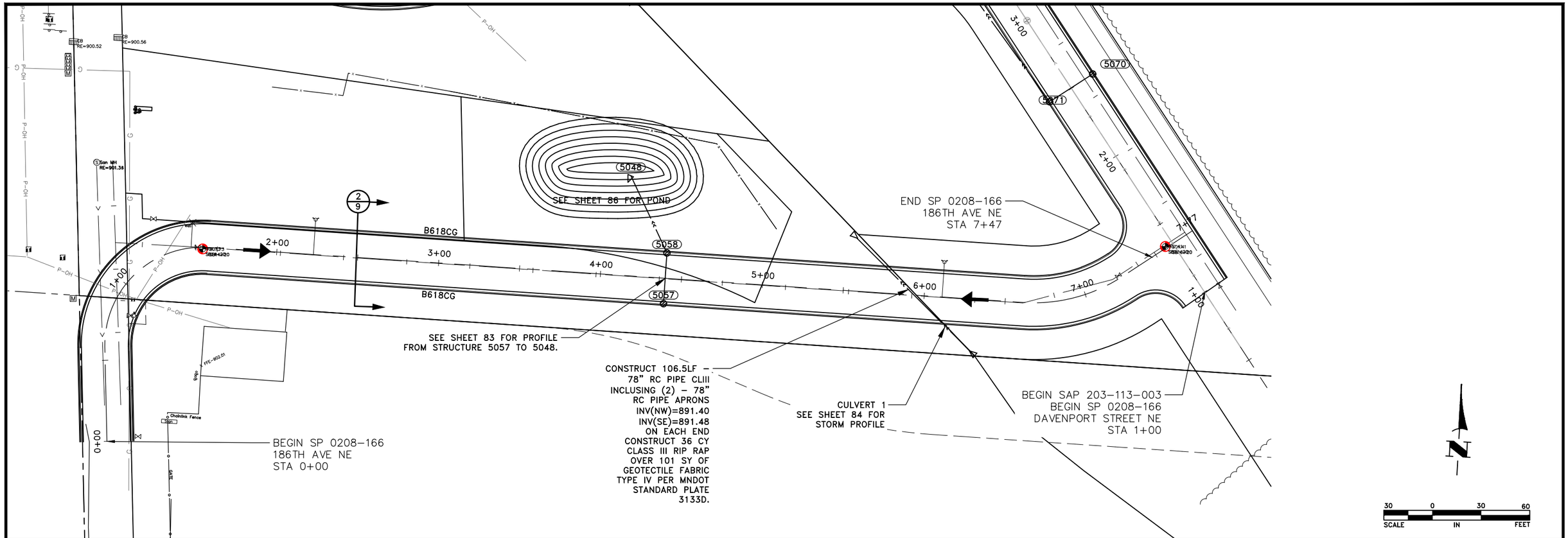

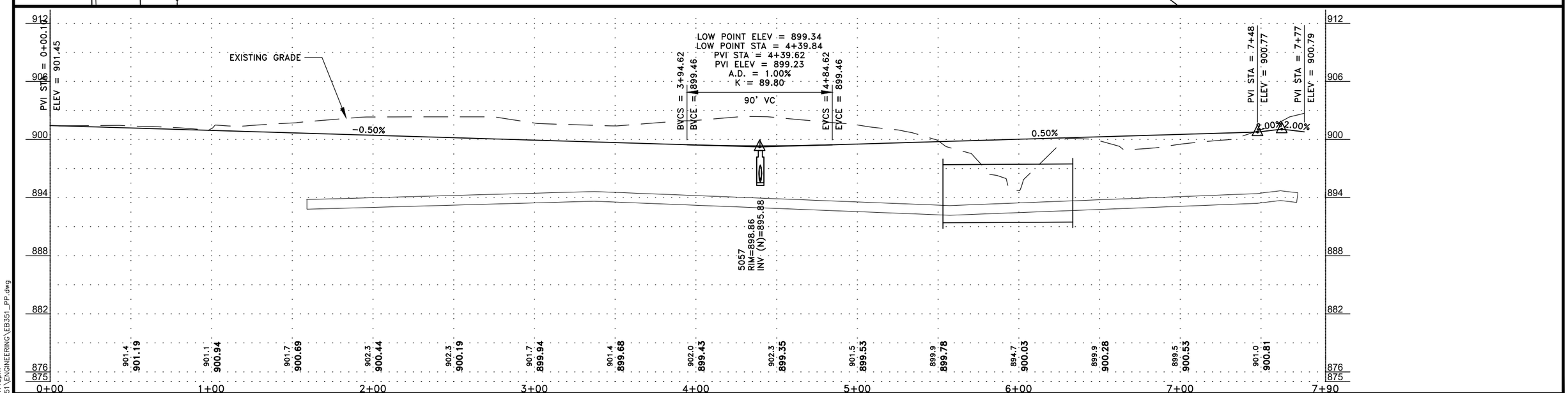

DATE	REVISION

I hereby certify that this plan, specification, or report was prepared by me or under my direct supervision and that I am a duly Licensed Professional Engineer under the laws of the State of Minnesota.

CRAIG J. JOCHUM, P.E.
Date 8/7/20 Lic. No. 23461

DESIGNED BY: CJJ
DRAWN BY: SGJ
CHECKED BY: TAE

Hakanson Anderson
Civil Engineers and Land Surveyors
3601 Thurston Ave., Anoka, Minnesota 55303
763-427-5860 FAX 763-427-0520
www.hakanson-anderson.com

STATE PROJ. NO 0208-166 (TH65=005)
SAP 203-127-001, SAP 203-111-005,
SAP 203-113-003

STREET AND DRAINAGE CONSTRUCTION

186TH AVE NE
TH 65 EAST SERVICE ROAD PROJECT

SHEET 72 OF 109 SHEETS

Aug 19, 2020 – 1:15pm
K:\MUNICIPAL\EB351\ENGINEERING\EB351_PP.dwg

EB351

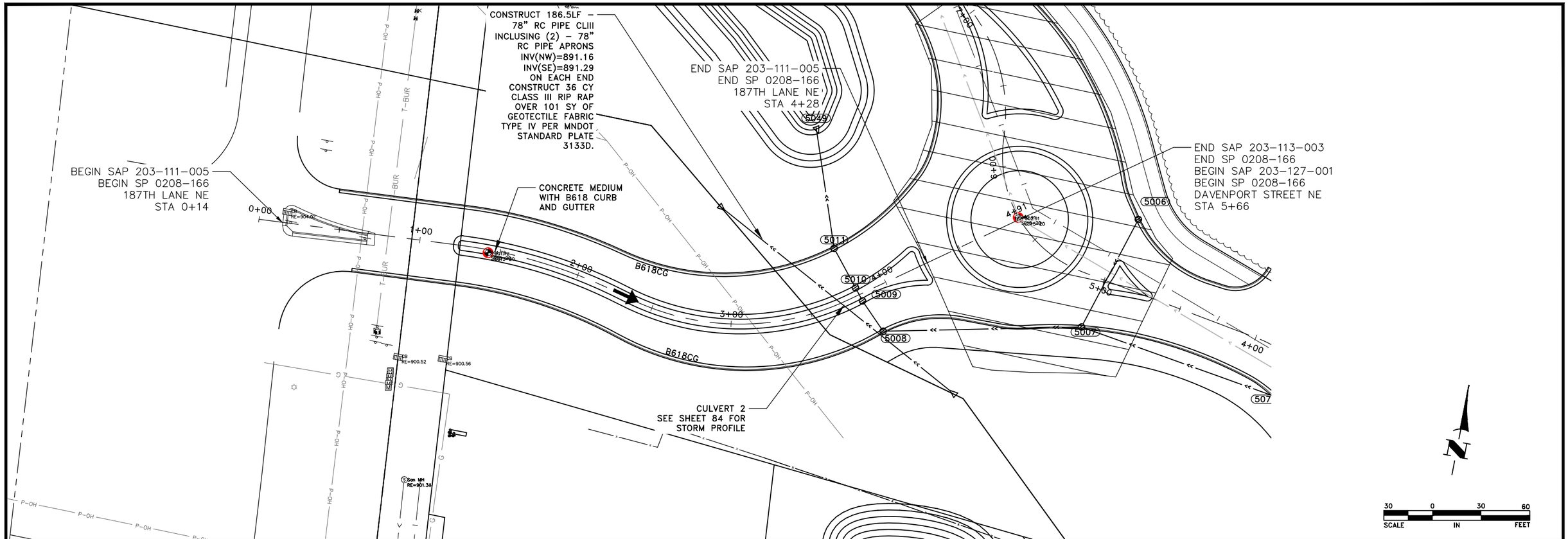

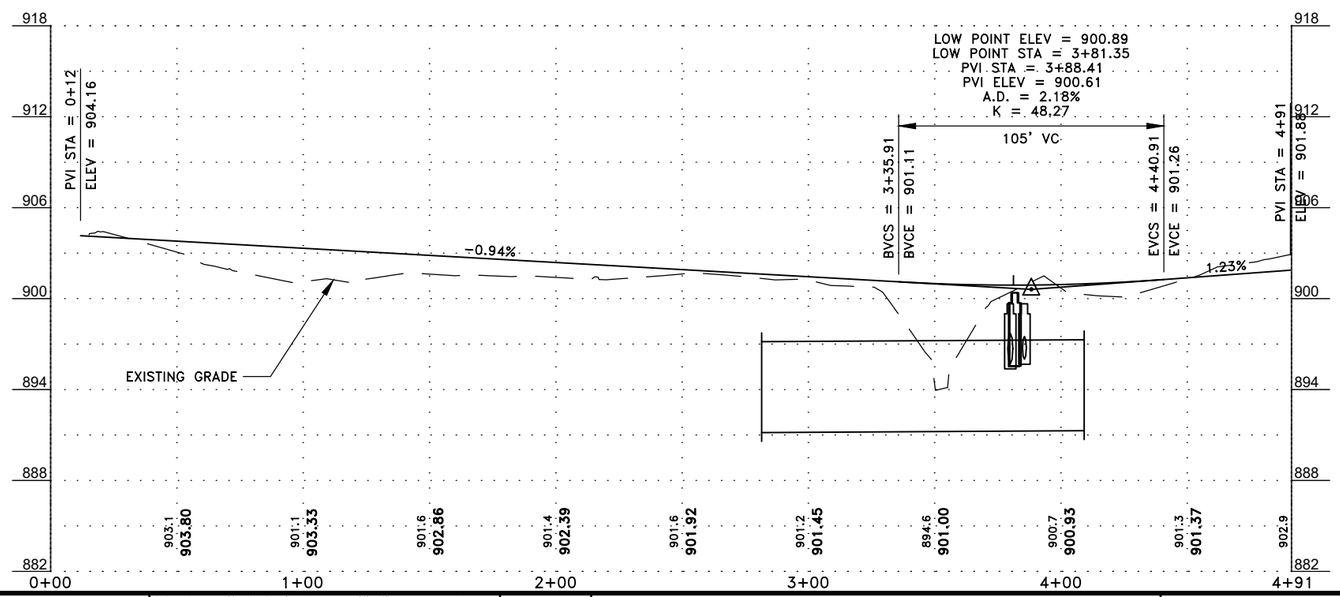

DATE	REVISION

I hereby certify that this plan, specification, or report was prepared by me or under my direct supervision and that I am a duly Licensed Professional Engineer under the laws of the State of Minnesota.

CRAIG J. JOCHUM, P.E.
Date 8/7/20 Lic. No. 23461

DESIGNED BY: CJJ
DRAWN BY: SGJ
CHECKED BY: TAE

Hakanson Anderson
Civil Engineers and Land Surveyors
3601 Thurston Ave., Anoka, Minnesota 55303
763-427-5860 FAX 763-427-0520
www.hakanson-anderson.com

STATE PROJ. NO 0208-166 (TH65=005)
SAP 203-127-001, SAP 203-111-005,
SAP 203-113-003

STREET AND DRAINAGE CONSTRUCTION

187TH LANE NE
TH 65 EAST SERVICE ROAD PROJECT

Aug 19, 2020 – 1:15pm
K:\MUNICIPAL\EB351\ENGINEERING\EB351_PP.dwg

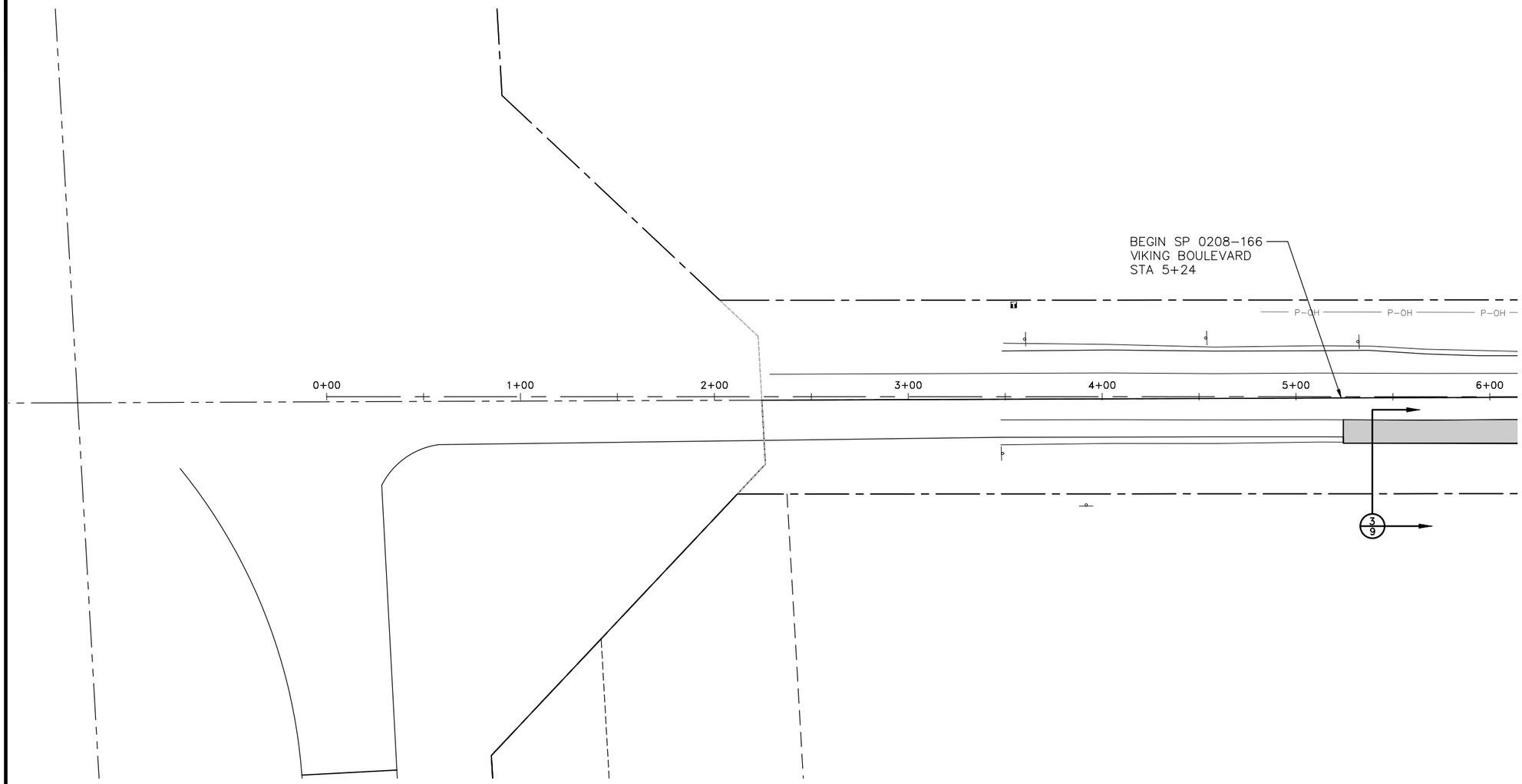

GENERAL NOTES:

1 ALL WORK WITHIN THE ANOKA COUNTY HIGHWAY DEPARTMENT RIGHT OF WAY SHALL BE IN ACCORDANCE WITH THE 2018 MN/DOT STANDARD SPECIFICATIONS FOR CONSTRUCTION.
2 SEE SHEETS 53-56 FOR REMOVALS.
3 SEE SHEETS 97-100 FOR EROSION CONTROL.
4 SEE SHEETS 106-107 FOR SIGNING AND STRIPING.
5 SEE SHEETS 108-109 FOR TRAFFIC CONTROL.
6 SEE SHEETS X1-X3 FOR CROSS-SECTIONS.

N

30 0 30 60
SCALE IN FEET

DATE	REVISION

I hereby certify that this plan, specification, or report was prepared by me or under my direct supervision and that I am a duly Licensed Professional Engineer under the laws of the State of Minnesota.

CRAIG J. JOCHUM, P.E.
Date 8/7/20 Lic. No. 23461

DESIGNED BY: CJJ
DRAWN BY: SGJ
CHECKED BY: TAE

Hakanson Anderson
Civil Engineers and Land Surveyors
3601 Thurston Ave., Anoka, Minnesota 55303
763-427-5860 FAX 763-427-0520
www.hakanson-anderson.com

STATE PROJ. NO 0208-166 (TH65=005)
SAP 203-127-001, SAP 203-111-005,
SAP 203-113-003

VIKING BOULEVARD CONSTRUCTION

VIKING BOULEVARD
TH 65 EAST SERVICE ROAD PROJECT

Aug 19, 2020 - 1:15pm
K:\MUNICIPAL\EB351\ENGINEERING\EB351_PP.dwg

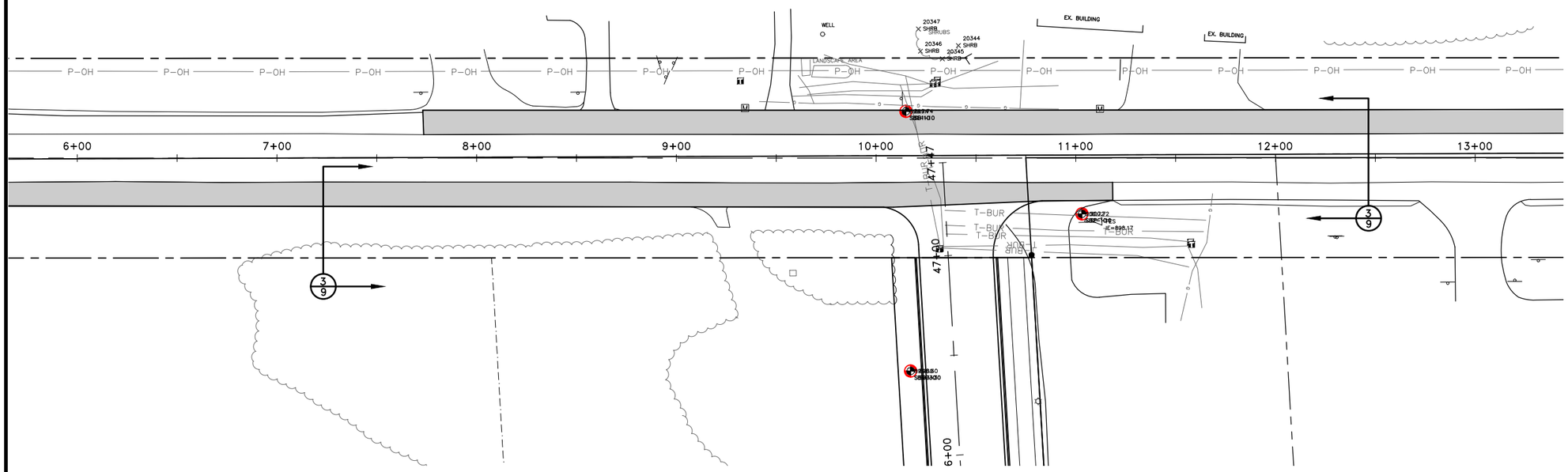

GENERAL NOTES:

1 ALL WORK WITHIN THE ANOKA COUNTY HIGHWAY DEPARTMENT RIGHT OF WAY SHALL BE IN ACCORDANCE WITH THE 2018 MN/DOT STANDARD SPECIFICATIONS FOR CONSTRUCTION.
2 SEE SHEETS 53-56 FOR REMOVALS.
3 SEE SHEETS 97-100 FOR EROSION CONTROL.
4 SEE SHEETS 106-107 FOR SIGNING AND STRIPING.
5 SEE SHEETS 108-109 FOR TRAFFIC CONTROL.
6 SEE SHEETS X1-X3 FOR CROSS-SECTIONS.

N

30 0 30 60
SCALE IN FEET

DATE	REVISION

I hereby certify that this plan, specification, or report was prepared by me or under my direct supervision and that I am a duly Licensed Professional Engineer under the laws of the State of Minnesota.

CRAIG J. JOCHUM, P.E.
Date 8/7/20 Lic. No. 23461

DESIGNED BY: CJJ
DRAWN BY: SGJ
CHECKED BY: TAE

Hakanson Anderson
Civil Engineers and Land Surveyors
3601 Thurston Ave., Anoka, Minnesota 55303
763-427-5860 FAX 763-427-0520
www.hakanson-anderson.com

STATE PROJ. NO 0208-166 (TH65=005)
SAP 203-127-001, SAP 203-111-005,
SAP 203-113-003

VIKING BOULEVARD CONSTRUCTION

VIKING BOULEVARD
TH 65 EAST SERVICE ROAD PROJECT

EB351

Aug 19, 2020 - 1:15pm
K:\MUNICIPAL\EB351\ENGINEERING\EB351_PP.dwg

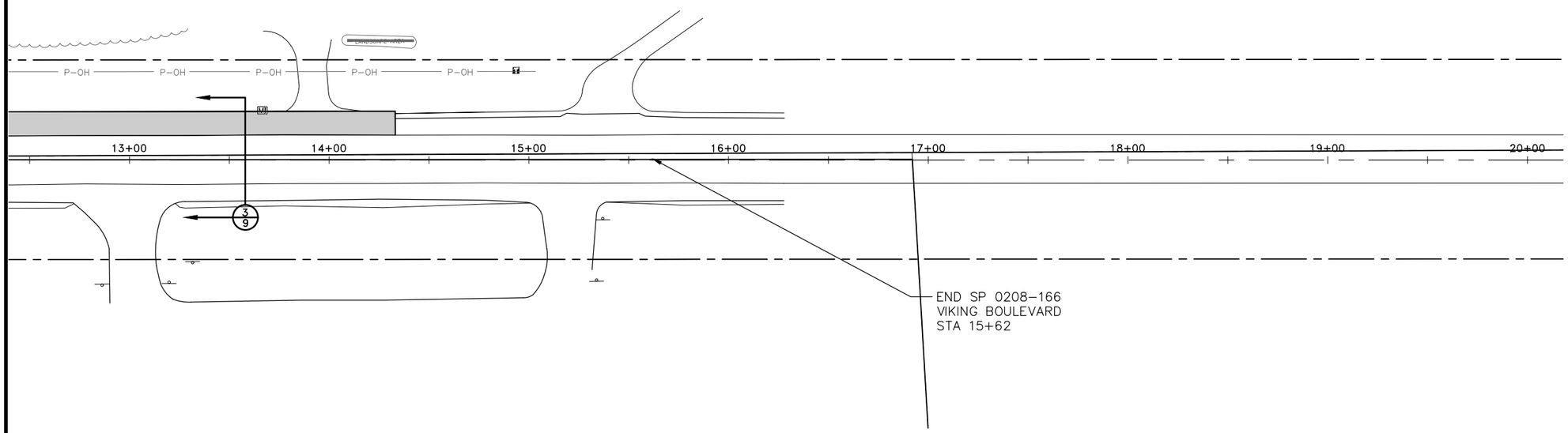

GENERAL NOTES:

1 ALL WORK WITHIN THE ANOKA COUNTY HIGHWAY DEPARTMENT RIGHT OF WAY SHALL BE IN ACCORDANCE WITH THE 2018 MN/DOT STANDARD SPECIFICATIONS FOR CONSTRUCTION.
2 SEE SHEETS 53-56 FOR REMOVALS.
3 SEE SHEETS 97-100 FOR EROSION CONTROL.
4 SEE SHEETS 106-107 FOR SIGNING AND STRIPING.
5 SEE SHEETS 108-109 FOR TRAFFIC CONTROL.
6 SEE SHEETS X1-X3 FOR CROSS-SECTIONS.

N

30 0 30 60
SCALE IN FEET

DATE	REVISION

I hereby certify that this plan, specification, or report was prepared by me or under my direct supervision and that I am a duly Licensed Professional Engineer under the laws of the State of Minnesota.

CRAIG J. JOCHUM, P.E.
Date 8/7/20 Lic. No. 23461

DESIGNED BY: CJJ
DRAWN BY: SGJ
CHECKED BY: TAE

Hakanson Anderson
Civil Engineers and Land Surveyors
3601 Thurston Ave., Anoka, Minnesota 55303
763-427-5860 FAX 763-427-0520
www.hakanson-anderson.com

STATE PROJ. NO 0208-166 (TH65=005)
SAP 203-127-001, SAP 203-111-005,
SAP 203-113-003

VIKING BOULEVARD CONSTRUCTION

VIKING BOULEVARD
TH 65 EAST SERVICE ROAD PROJECT

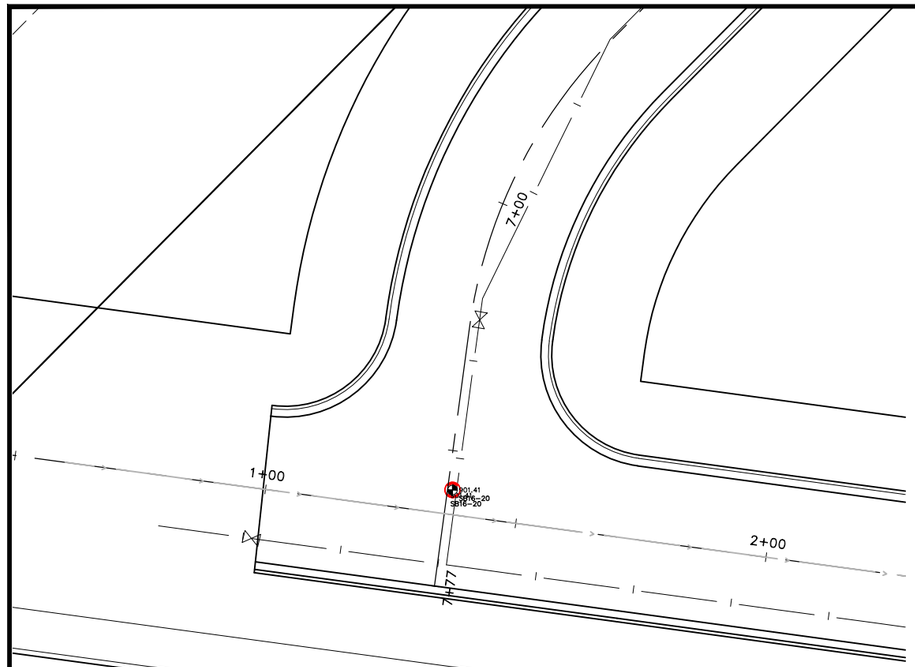

DAVENPORT ST AND 186TH AVE INTERSECTION DETAIL

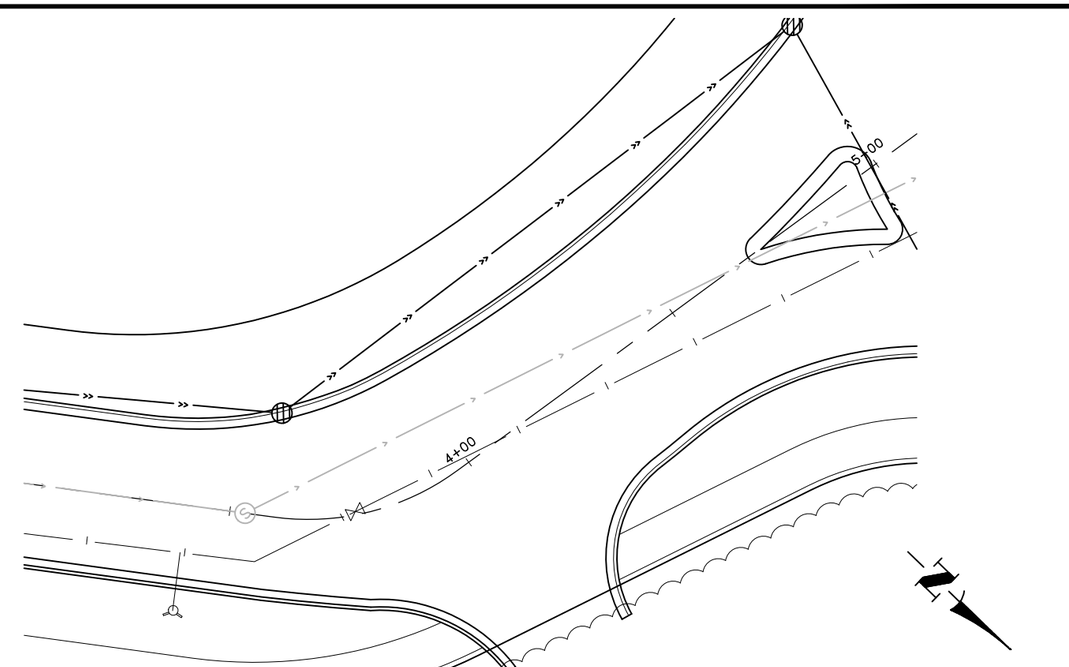

DAVENPORT ST AND STA 4+00

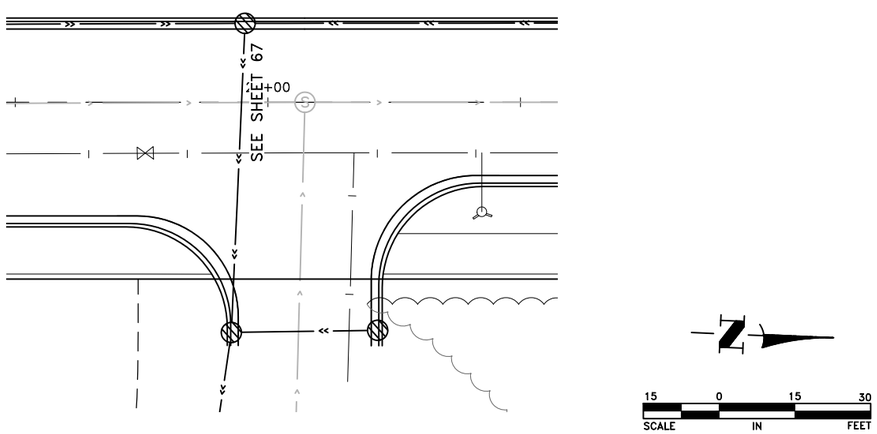

DAVENPORT ST STA 21+10

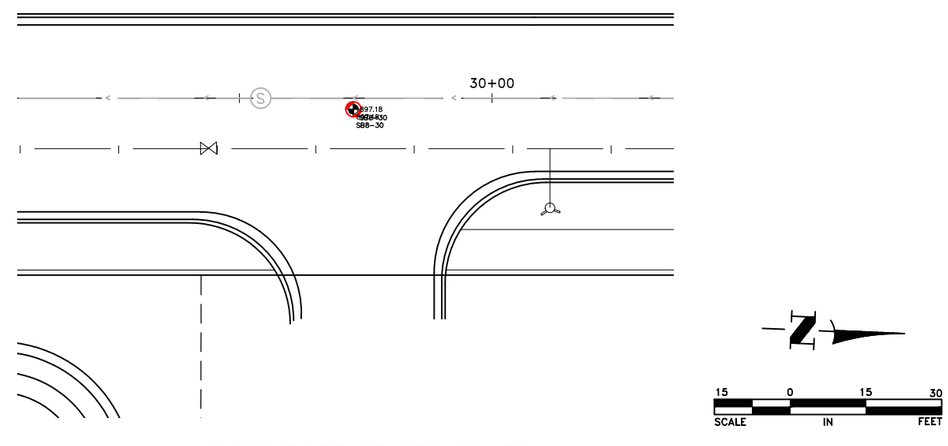

DAVENPORT ST STA 29+70

DATE	REVISION

I hereby certify that this plan, specification, or report was prepared by me or under my direct supervision and that I am a duly Licensed Professional Engineer under the laws of the State of Minnesota.

CRAIG J. JOCHUM, P.E.
Date 8/7/20 Lic. No. 23461

DESIGNED BY: CJJ
DRAWN BY: SGJ
CHECKED BY: TAE

Hakanson Anderson
Civil Engineers and Land Surveyors
3601 Thurston Ave., Anoka, Minnesota 55303
763-427-5860 FAX 763-427-0520
www.hakanson-anderson.com

STATE PROJ. NO 0208-166 (TH65=005)
SAP 203-127-001, SAP 203-111-005,
SAP 203-113-003

INTERSECTION DETAILS

TH 65 EAST SERVICE ROAD PROJECT

EB351

Aug 19, 2020 – 1:16pm
K:\MUNICIPAL\EB351\ENGINEERING\EB351_PP.dwg

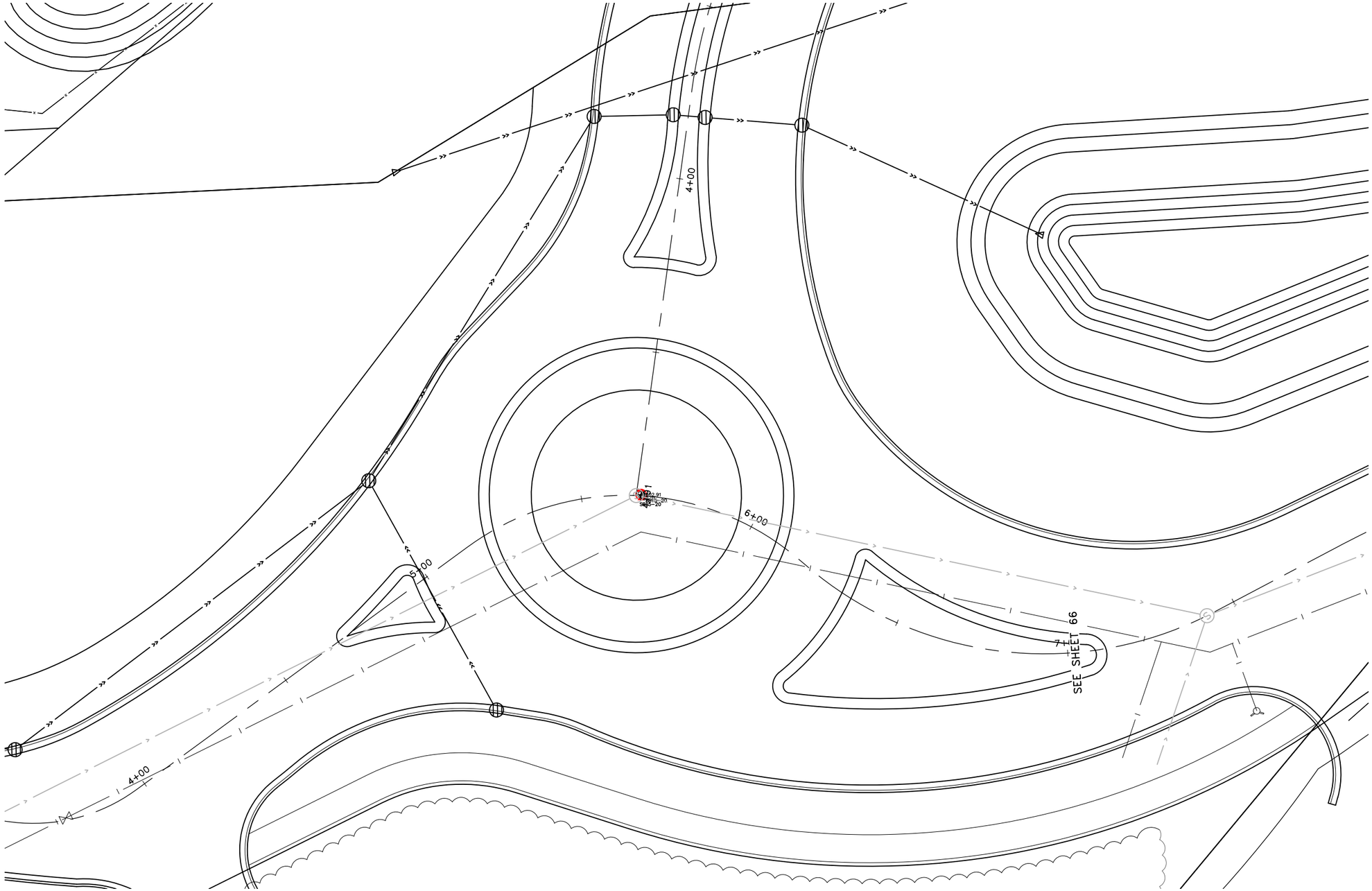

ROUND–ABOUT

15 0 15 30
SCALE IN FEET

DATE	REVISION

I hereby certify that this plan, specification, or report was prepared by me or under my direct supervision and that I am a duly Licensed Professional Engineer under the laws of the State of Minnesota.

Date 8/7/20 CRAIG J. JOCHUM, P.E. Lic. No. 23461

DESIGNED BY: CJJ
DRAWN BY: SGJ
CHECKED BY: TAE

Hakanson Anderson
Civil Engineers and Land Surveyors
3601 Thurston Ave., Anoka, Minnesota 55303
763–427–5860 FAX 763–427–0520
www.hakanson–anderson.com

STATE PROJ. NO 0208–166 (TH65=005)
SAP 203–127–001, SAP 203–111–005,
SAP 203–113–003

INTERSECTION DETAILS

TH 65 EAST SERVICE ROAD PROJECT

SHEET 78 OF 109 SHEETS

EB351

Aug 19, 2020 – 1:16pm
K:\MUNICIPAL\EB351\ENGINEERING\EB351_PP.dwg

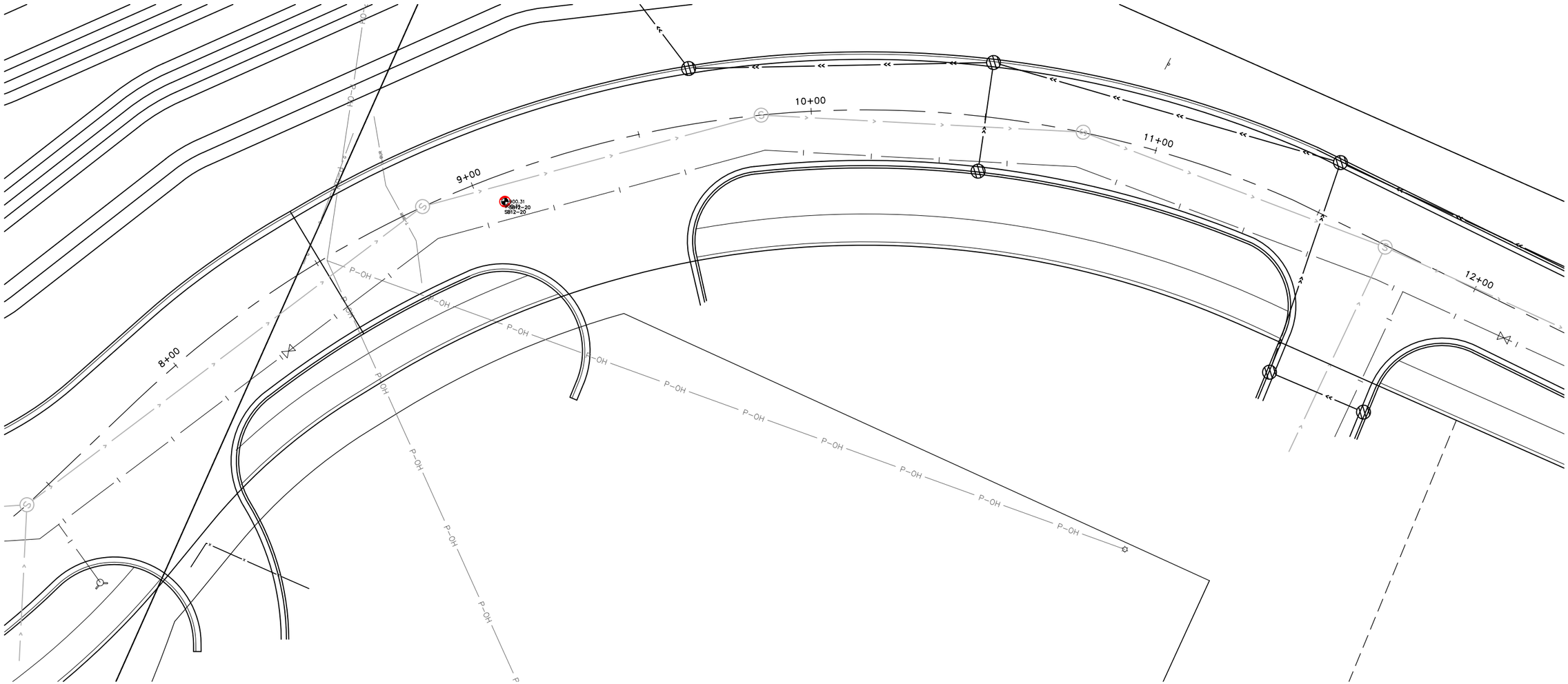

DAVENPORT ST STA 7+75 TO 11+70

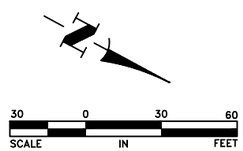

DATE	REVISION

I hereby certify that this plan, specification, or report was prepared by me or under my direct supervision and that I am a duly Licensed Professional Engineer under the laws of the State of Minnesota.

CRAIG J. JOCHUM, P.E.
Date 8/7/20 Lic. No. 23461

DESIGNED BY: CJJ
DRAWN BY: SGJ
CHECKED BY: TAE

Hakanson Anderson
Civil Engineers and Land Surveyors
3601 Thurston Ave., Anoka, Minnesota 55303
763-427-5860 FAX 763-427-0520
www.hakanson-anderson.com

STATE PROJ. NO 0208-166 (TH65=005)
SAP 203-127-001, SAP 203-111-005,
SAP 203-113-003

INTERSECTION DETAILS

TH 65 EAST SERVICE ROAD PROJECT

EB351

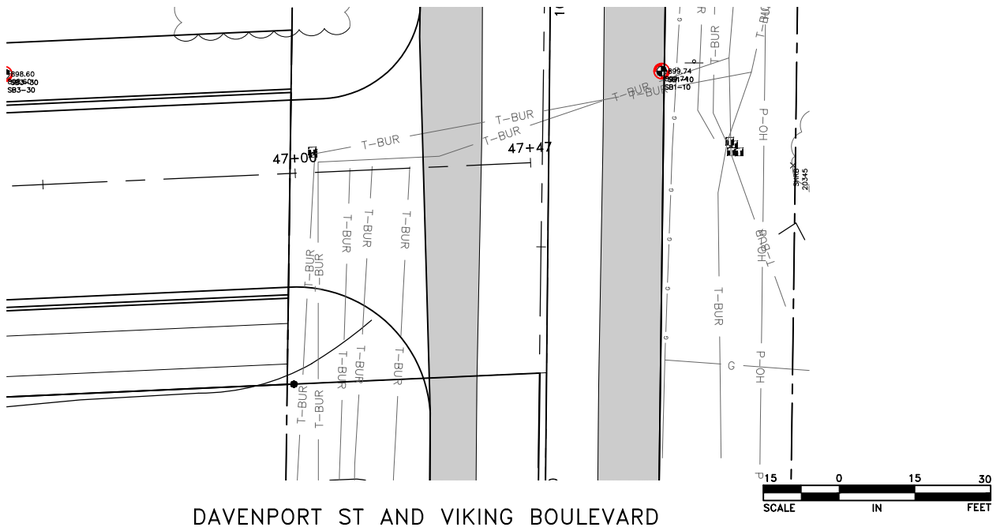

DAVENPORT ST AND VIKING BOULEVARD

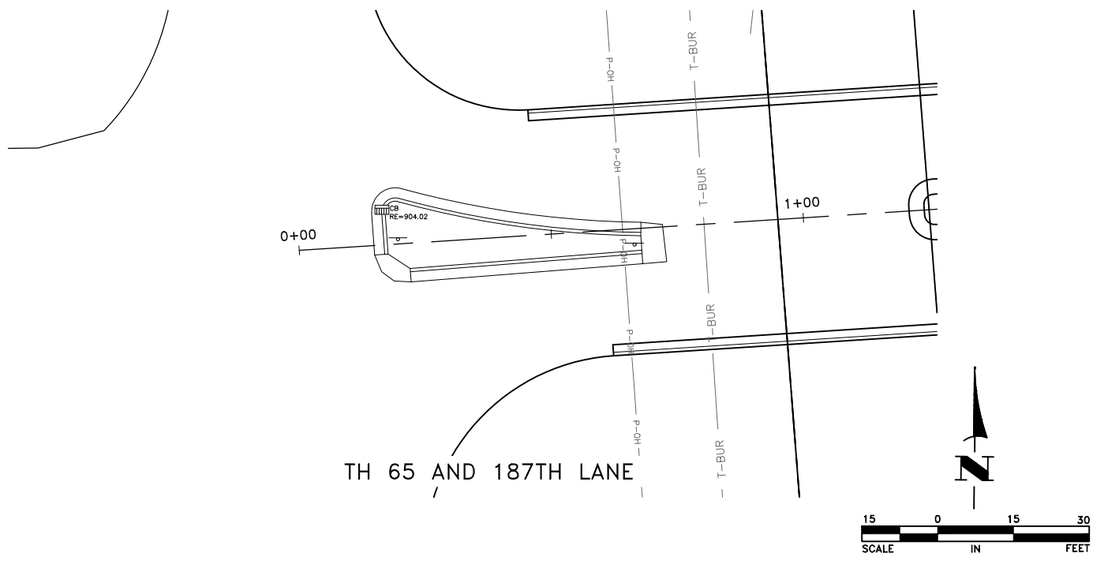

TH 65 AND 187TH LANE

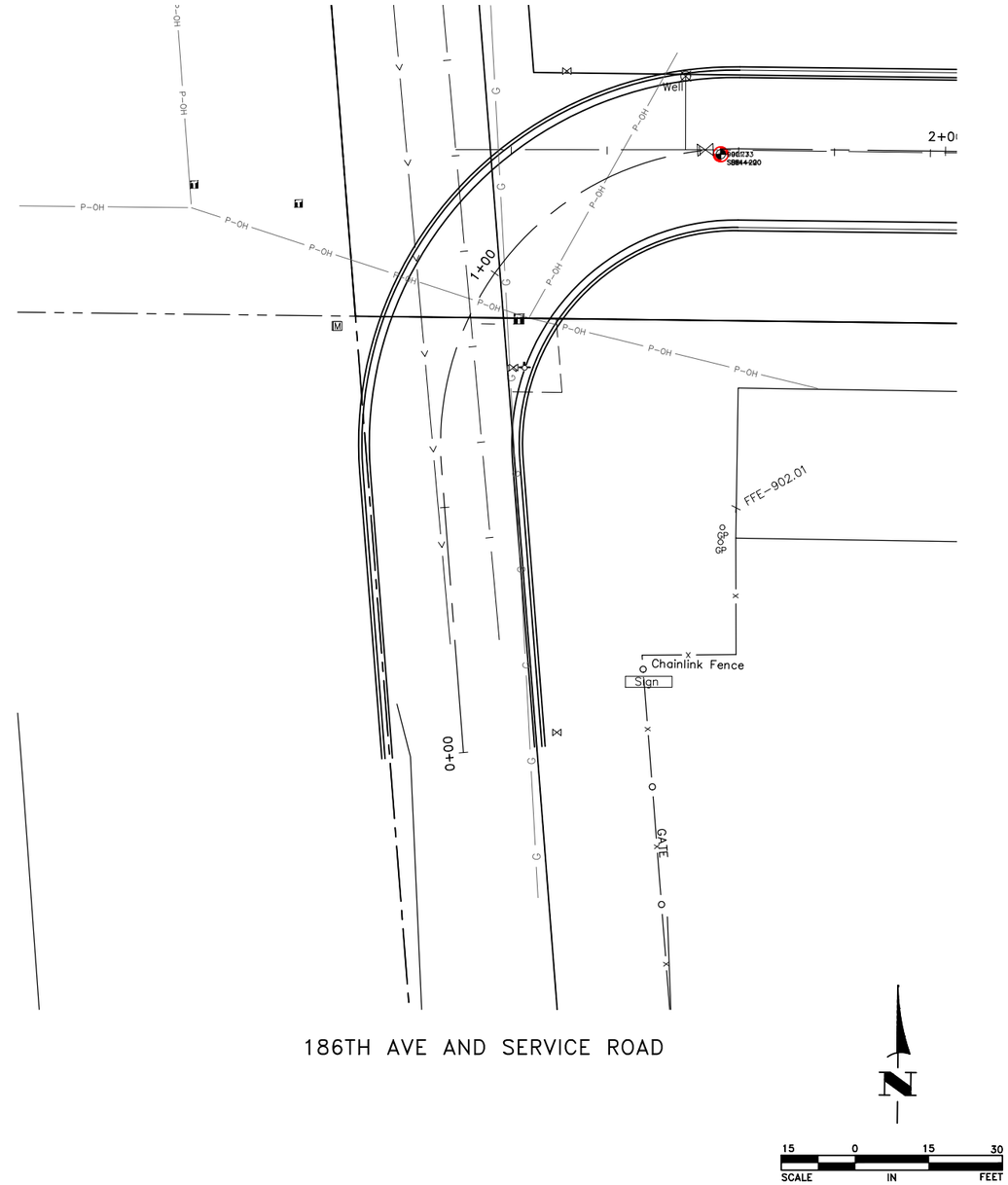

186TH AVE AND SERVICE ROAD

DATE	REVISION

I hereby certify that this plan, specification, or report was prepared by me or under my direct supervision and that I am a duly Licensed Professional Engineer under the laws of the State of Minnesota.

CRAIG J. JOCHUM, P.E.
Date 8/7/20 Lic. No. 23461

DESIGNED BY: CJJ
DRAWN BY: SGJ
CHECKED BY: TAE

Hakanson Anderson
Civil Engineers and Land Surveyors
3601 Thurston Ave., Anoka, Minnesota 55303
763-427-5860 FAX 763-427-0520
www.hakanson-anderson.com

STATE PROJ. NO 0208-166 (TH65=005)
SAP 203-127-001, SAP 203-111-005,
SAP 203-113-003

INTERSECTION DETAILS

TH 65 EAST SERVICE ROAD PROJECT

Aug 19, 2020 – 1:16pm
K:\MUNICIPAL\EB351\ENGINEERING\EB351_PP.dwg

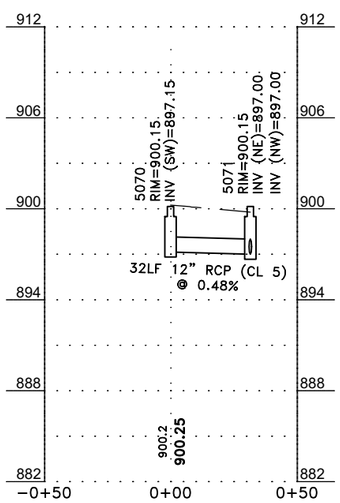

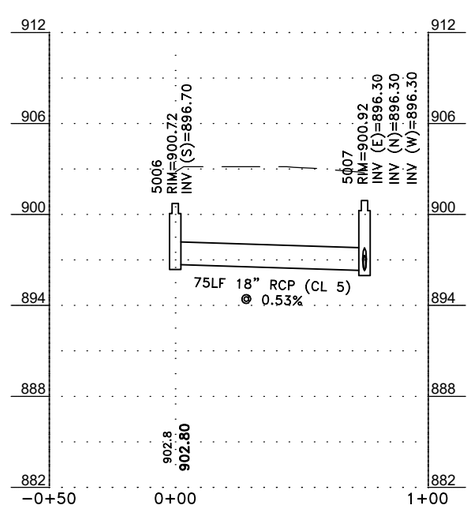

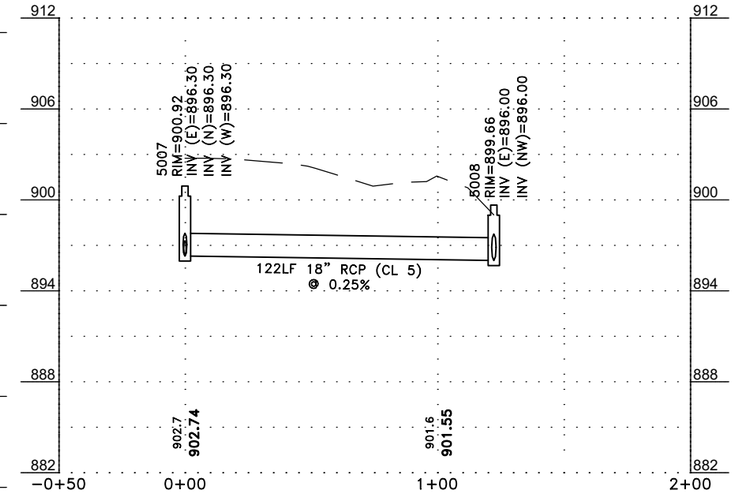

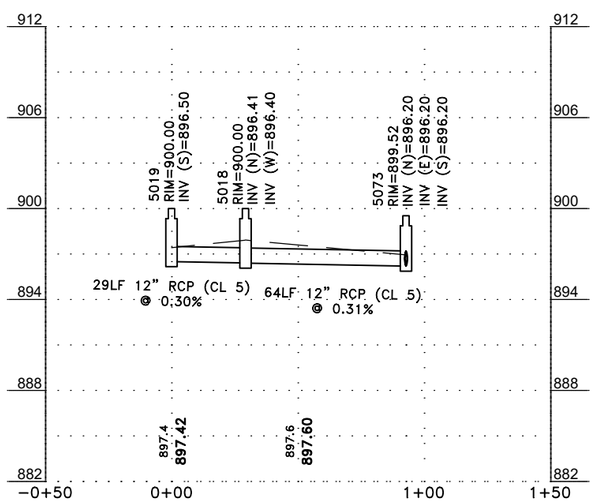

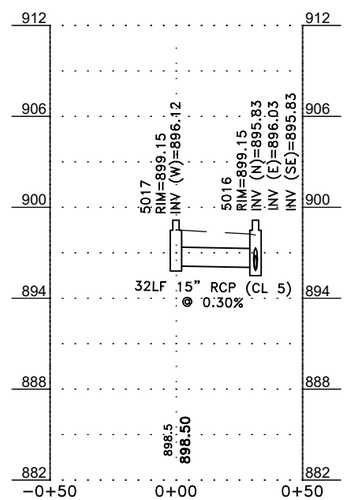

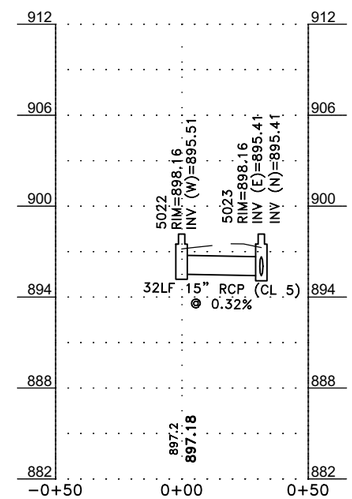

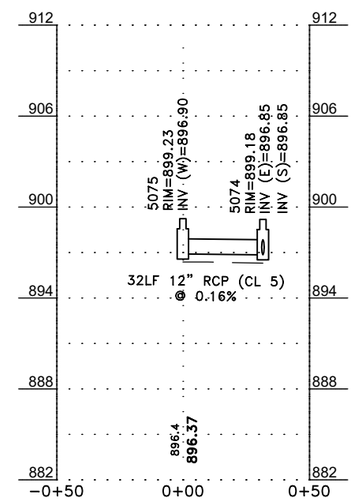

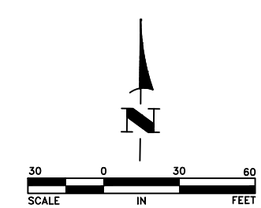

DATE	REVISION

I hereby certify that this plan, specification, or report was prepared by me or under my direct supervision and that I am a duly Licensed Professional Engineer under the laws of the State of Minnesota.

CRAIG J. JOCHUM, P.E.
Date 8/7/20 Lic. No. 23461

DESIGNED BY: CJJ
DRAWN BY: SGJ
CHECKED BY: TAE

Hakanson Anderson
Civil Engineers and Land Surveyors
3601 Thurston Ave., Anoka, Minnesota 55303
763-427-5860 FAX 763-427-0520
www.hakanson-anderson.com

STATE PROJ. NO 0208-166 (TH65=005)
SAP 203-127-001, SAP 203-111-005,
SAP 203-113-003

DRAINAGE PROFILES

TH 65 EAST SERVICE ROAD PROJECT

EB351

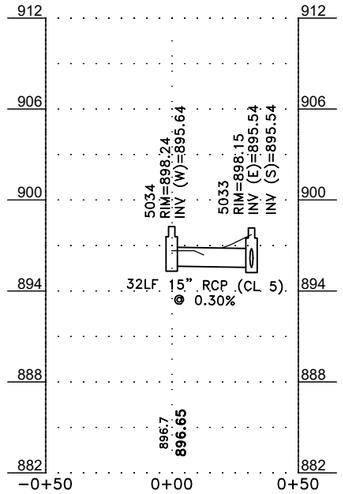

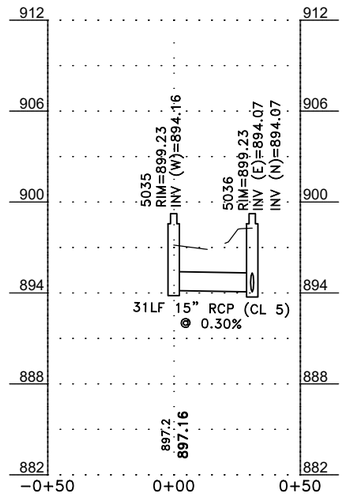

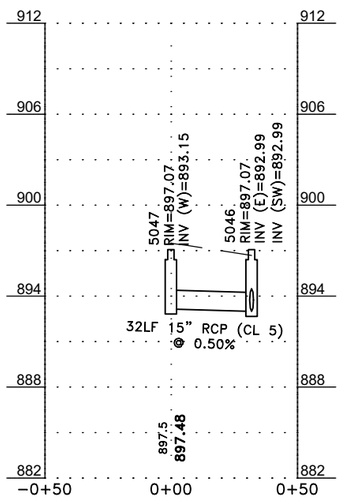

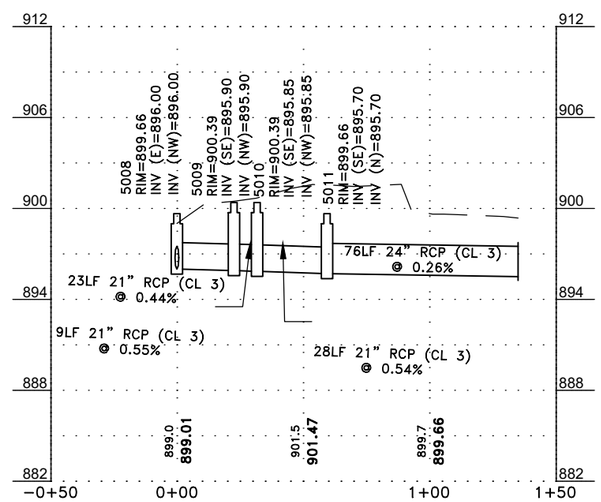

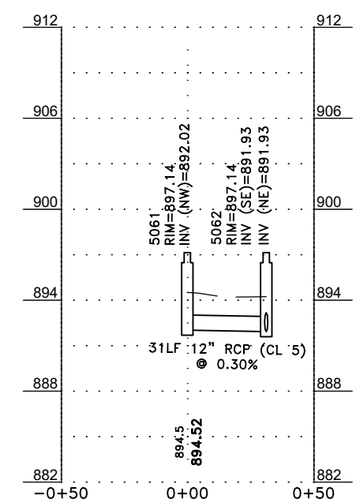

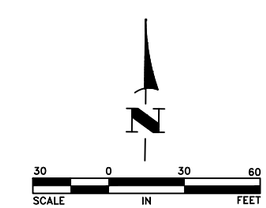

DATE	REVISION

I hereby certify that this plan, specification, or report was prepared by me or under my direct supervision and that I am a duly Licensed Professional Engineer under the laws of the State of Minnesota.

CRAIG J. JOCHUM, P.E.
Date 8/7/20 Lic. No. 23461

DESIGNED BY: CJJ
DRAWN BY: SGJ
CHECKED BY: TAE

Hakanson Anderson
Civil Engineers and Land Surveyors
3601 Thurston Ave., Anoka, Minnesota 55303
763-427-5860 FAX 763-427-0520
www.hakanson-anderson.com

STATE PROJ. NO 0208-166 (TH65=005)
SAP 203-127-001, SAP 203-111-005,
SAP 203-113-003

DRAINAGE PROFILES

TH 65 EAST SERVICE ROAD PROJECT

EB351

Aug 19, 2020 – 1:16pm
K:\MUNICIPAL\EB351\ENGINEERING\EB351_PP.dwg

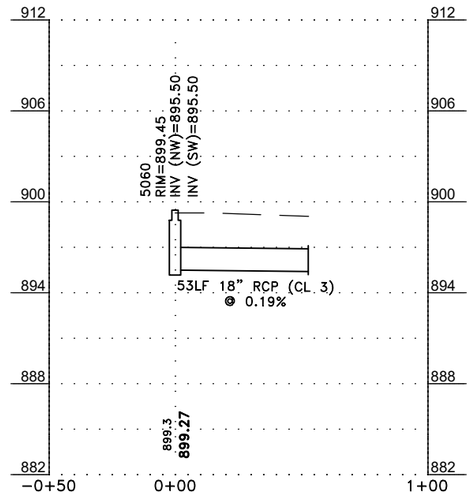

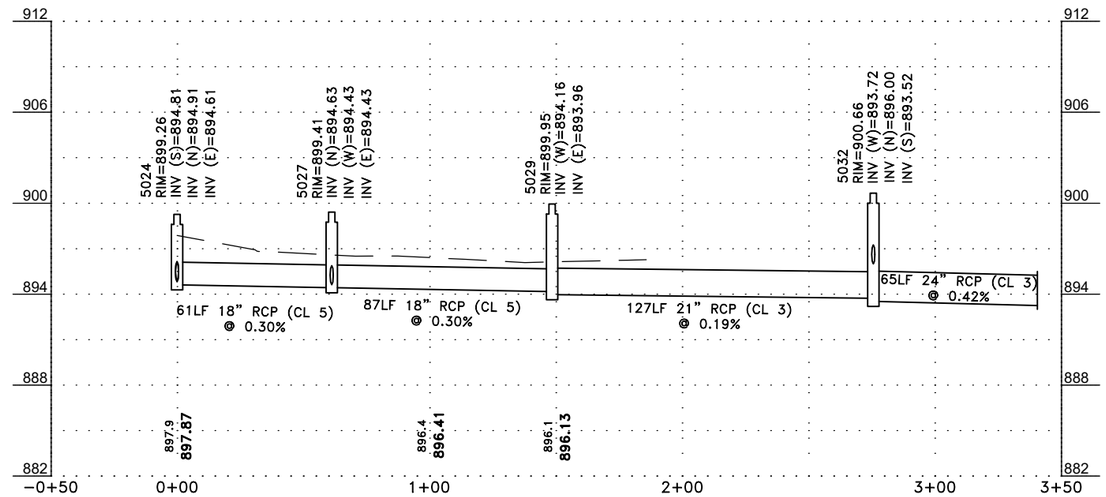

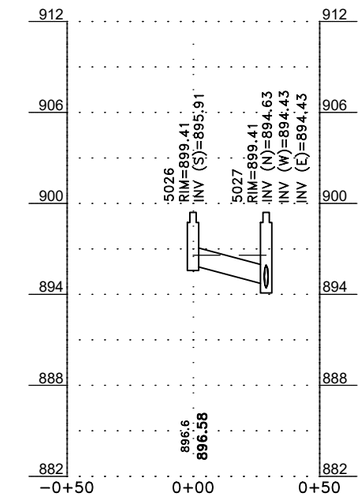

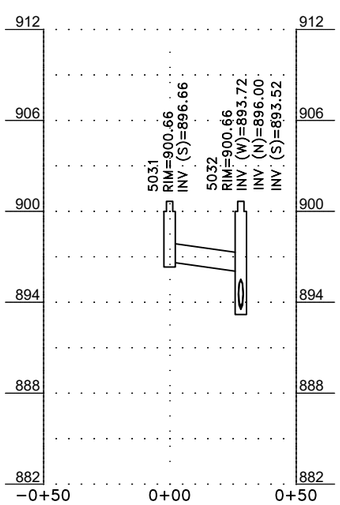

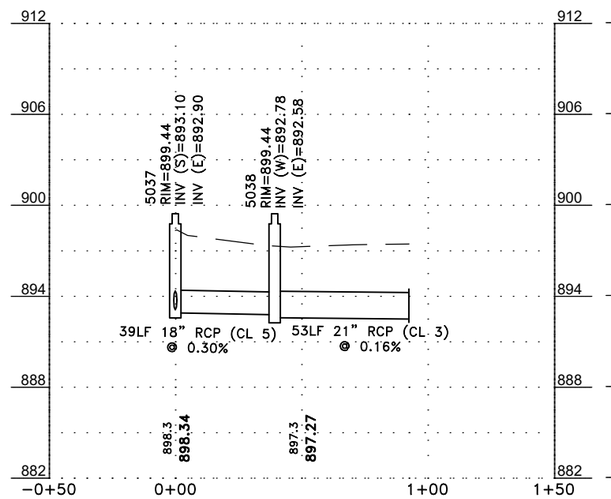

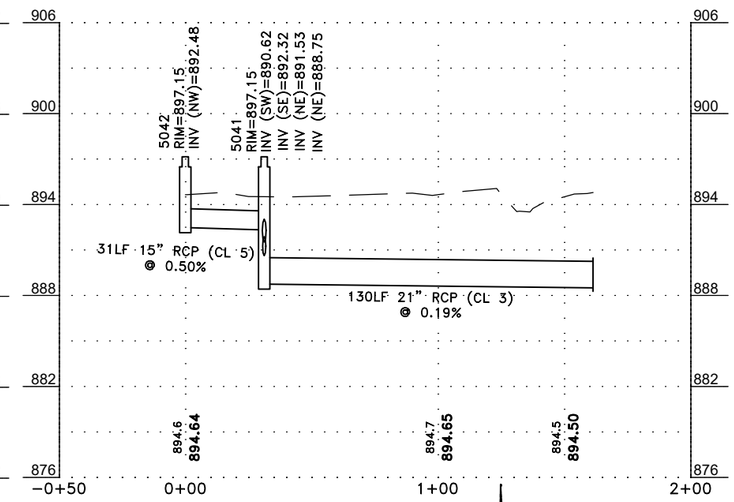

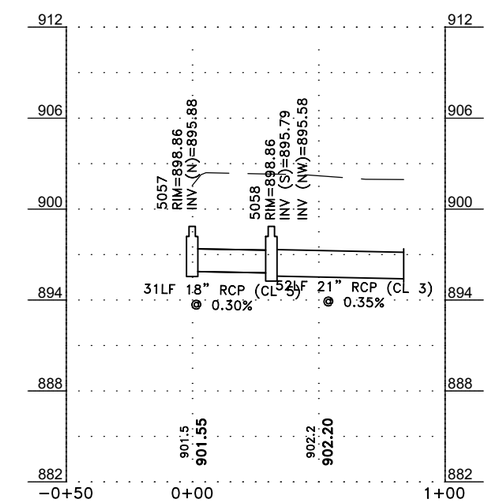

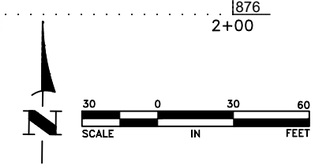

DATE	REVISION

I hereby certify that this plan, specification, or report was prepared by me or under my direct supervision and that I am a duly Licensed Professional Engineer under the laws of the State of Minnesota.

CRAIG J. JOCHUM, P.E.
Date 8/7/20 Lic. No. 23461

DESIGNED BY: CJJ
DRAWN BY: SGJ
CHECKED BY: TAE

Hakanson Anderson
Civil Engineers and Land Surveyors
3601 Thurston Ave., Anoka, Minnesota 55303
763-427-5860 FAX 763-427-0520
www.hakanson-anderson.com

STATE PROJ. NO 0208-166 (TH65=005)
SAP 203-127-001, SAP 203-111-005,
SAP 203-113-003

DRAINAGE PROFILES

TH 65 EAST SERVICE ROAD PROJECT

EB351

CULVERT 1

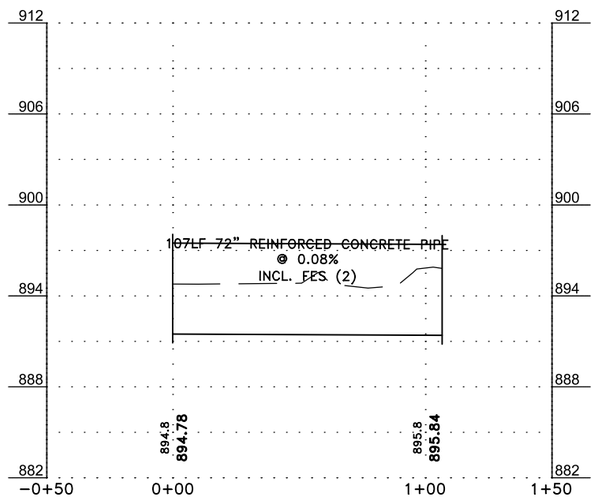

CULVERT 2

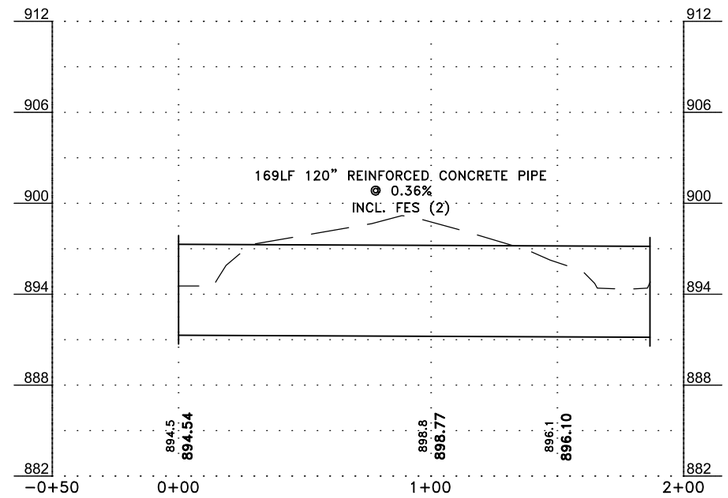

CULVERT 3

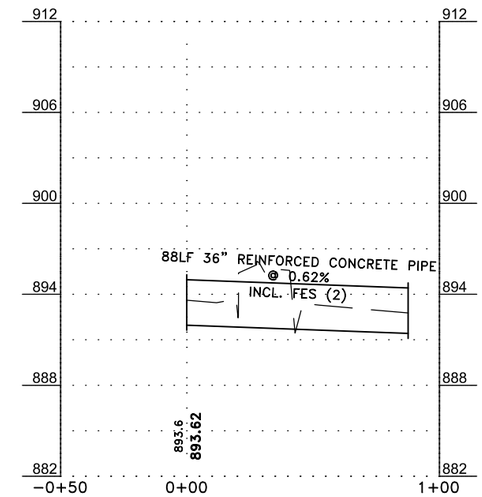

CULVERT 4

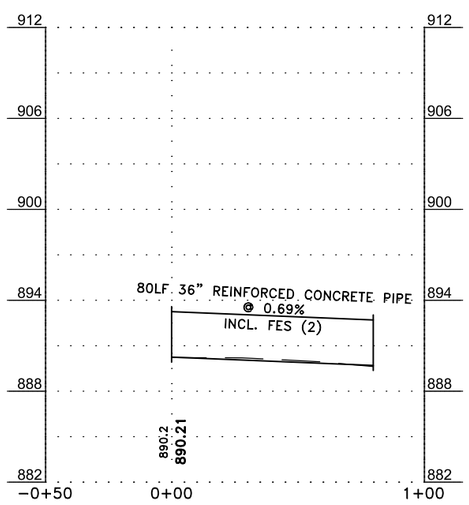

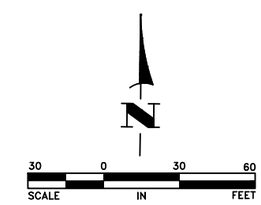

DATE	REVISION

I hereby certify that this plan, specification, or report was prepared by me or under my direct supervision and that I am a duly Licensed Professional Engineer under the laws of the State of Minnesota.

CRAIG J. JOCHUM, P.E.
Date 8/7/20 Lic. No. 23461

DESIGNED BY: CJJ
DRAWN BY: SGJ
CHECKED BY: TAE

Hakanson Anderson
Civil Engineers and Land Surveyors
3601 Thurston Ave., Anoka, Minnesota 55303
763-427-5860 FAX 763-427-0520
www.hakanson-anderson.com

STATE PROJ. NO 0208-166 (TH65=005)
SAP 203-127-001, SAP 203-111-005,
SAP 203-113-003

DRAINAGE PROFILES

TH 65 EAST SERVICE ROAD PROJECT

EB351

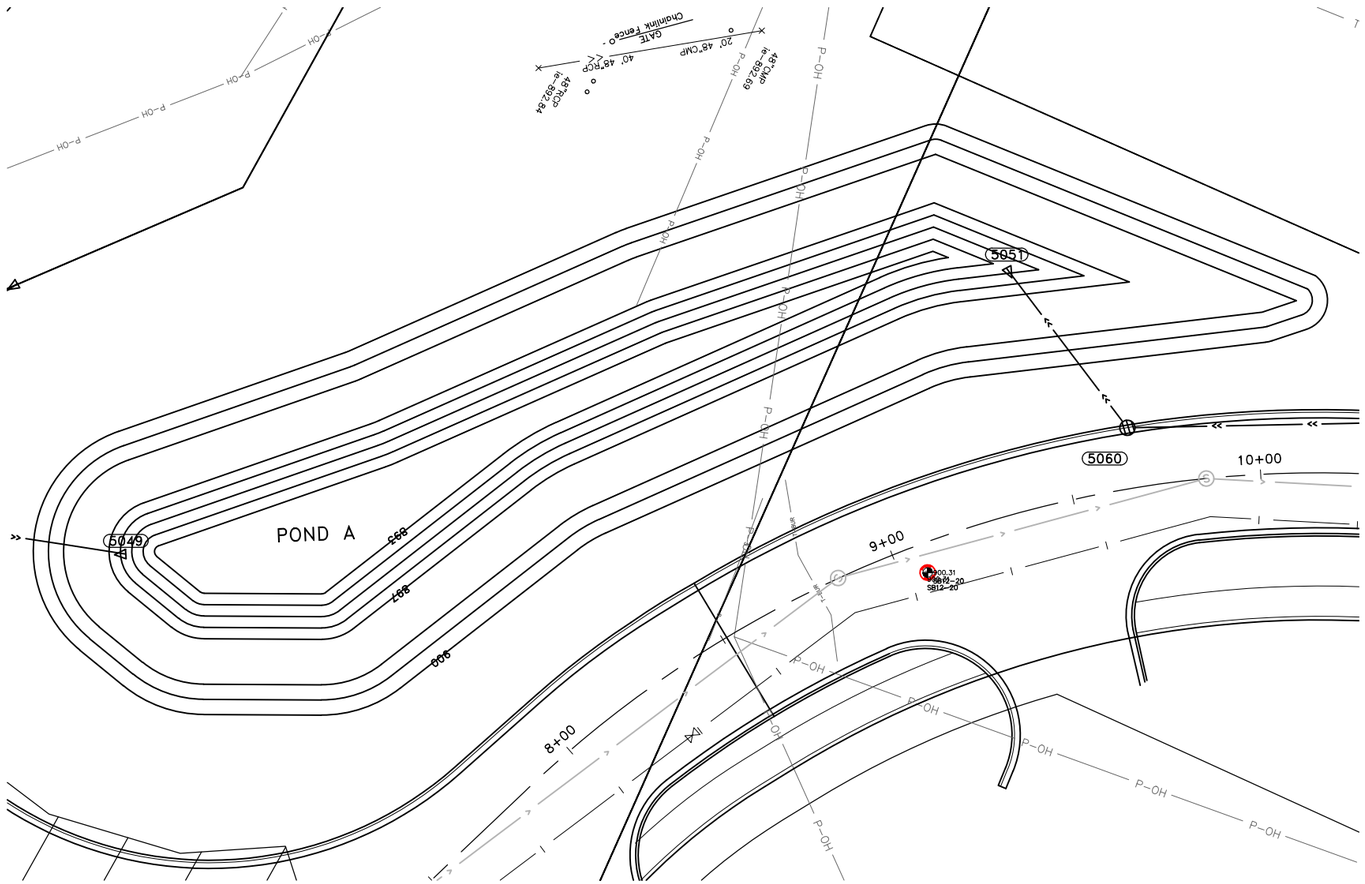

POND A

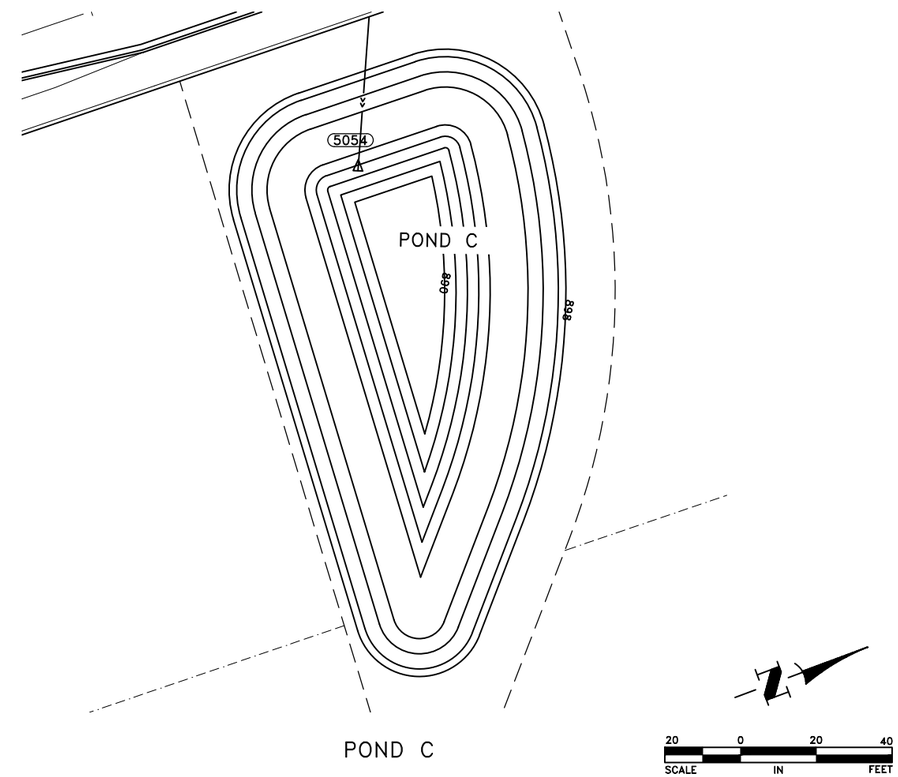

POND C

20 0 20 40
SCALE IN FEET

DATE	REVISION

I hereby certify that this plan, specification, or report was prepared by me or under my direct supervision and that I am a duly Licensed Professional Engineer under the laws of the State of Minnesota.

CRAIG J. JOCHUM, P.E.
Date 8/7/20 Lic. No. 23461

DESIGNED BY: CJJ
DRAWN BY: SGJ
CHECKED BY: TAE

Hakanson Anderson
Civil Engineers and Land Surveyors
3601 Thurston Ave., Anoka, Minnesota 55303
763-427-5860 FAX 763-427-0520
www.hakanson-anderson.com

STATE PROJ. NO 0208-166 (TH65=005)
SAP 203-127-001, SAP 203-111-005,
SAP 203-113-003

STORM POND GRADING

TH 65 EAST SERVICE ROAD PROJECT

SHEET 85 OF 109 SHEETS

EB351

Aug 19, 2020 – 1:17pm
K:\MUNICIPAL\EB351\ENGINEERING\EB351_PP.dwg

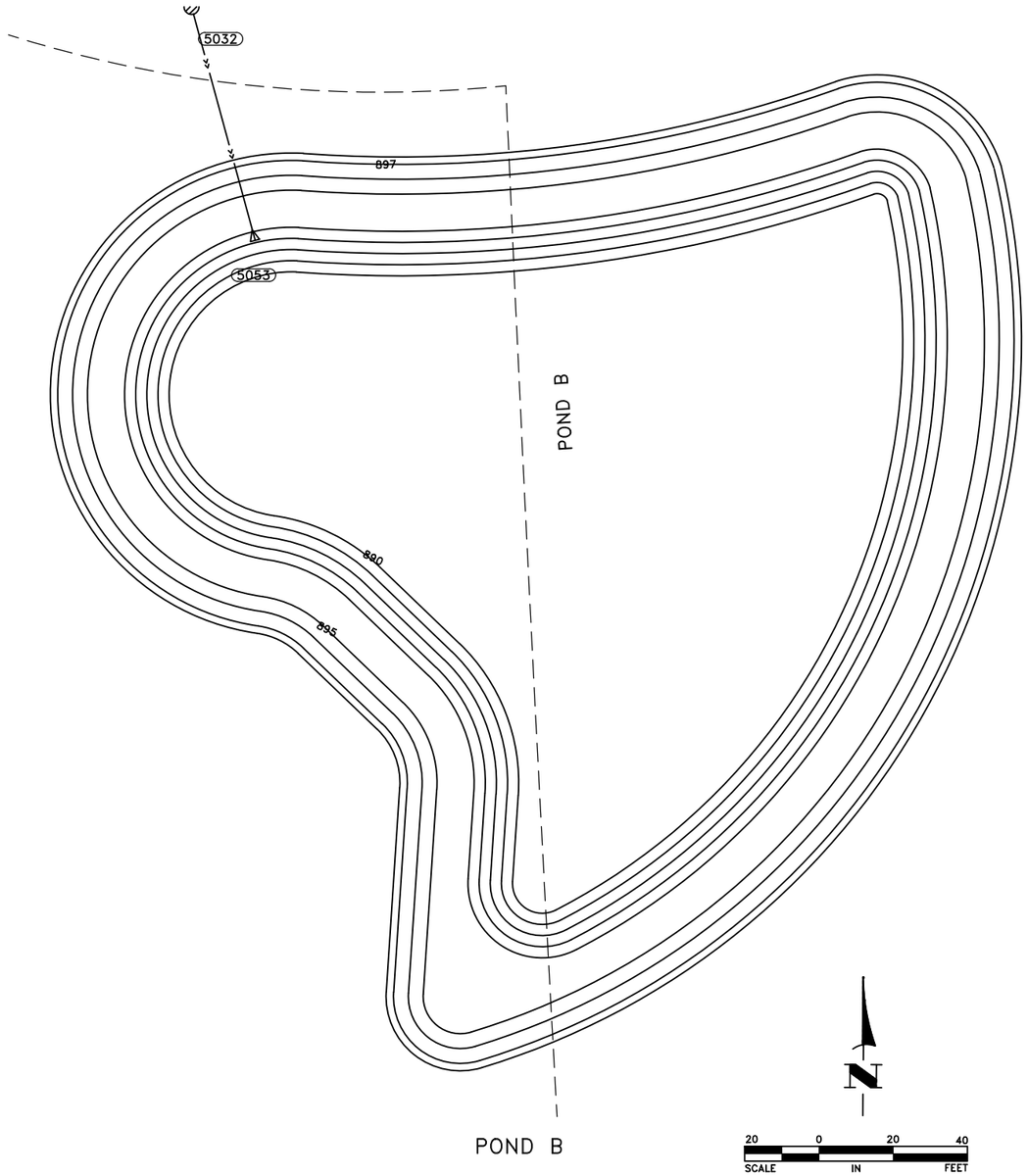

POND B

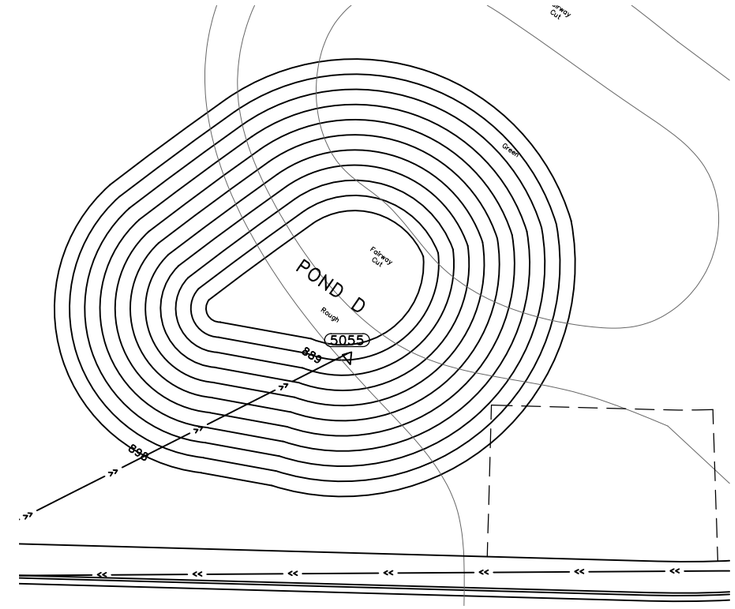

POND D

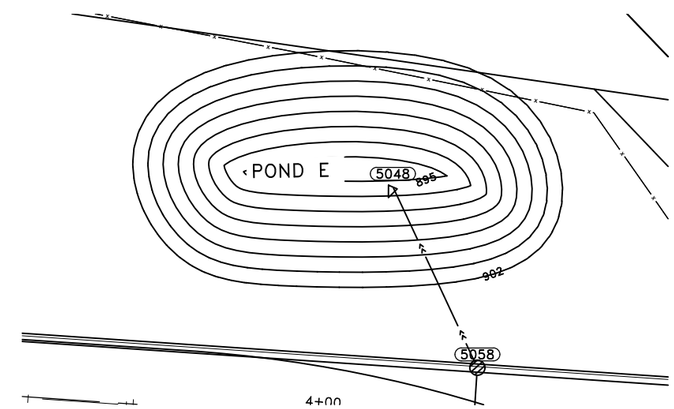

POND E

DATE	REVISION

I hereby certify that this plan, specification, or report was prepared by me or under my direct supervision and that I am a duly Licensed Professional Engineer under the laws of the State of Minnesota.

CRAIG J. JOCHUM, P.E.
Date 8/7/20 Lic. No. 23461

DESIGNED BY: CJJ
DRAWN BY: SGJ
CHECKED BY: TAE

Hakanson Anderson
Civil Engineers and Land Surveyors
3601 Thurston Ave., Anoka, Minnesota 55303
763-427-5860 FAX 763-427-0520
www.hakanson-anderson.com

STATE PROJ. NO 0208-166 (TH65=005)
SAP 203-127-001, SAP 203-111-005,
SAP 203-113-003

STORM POND GRADING

TH 65 EAST SERVICE ROAD PROJECT

EB351

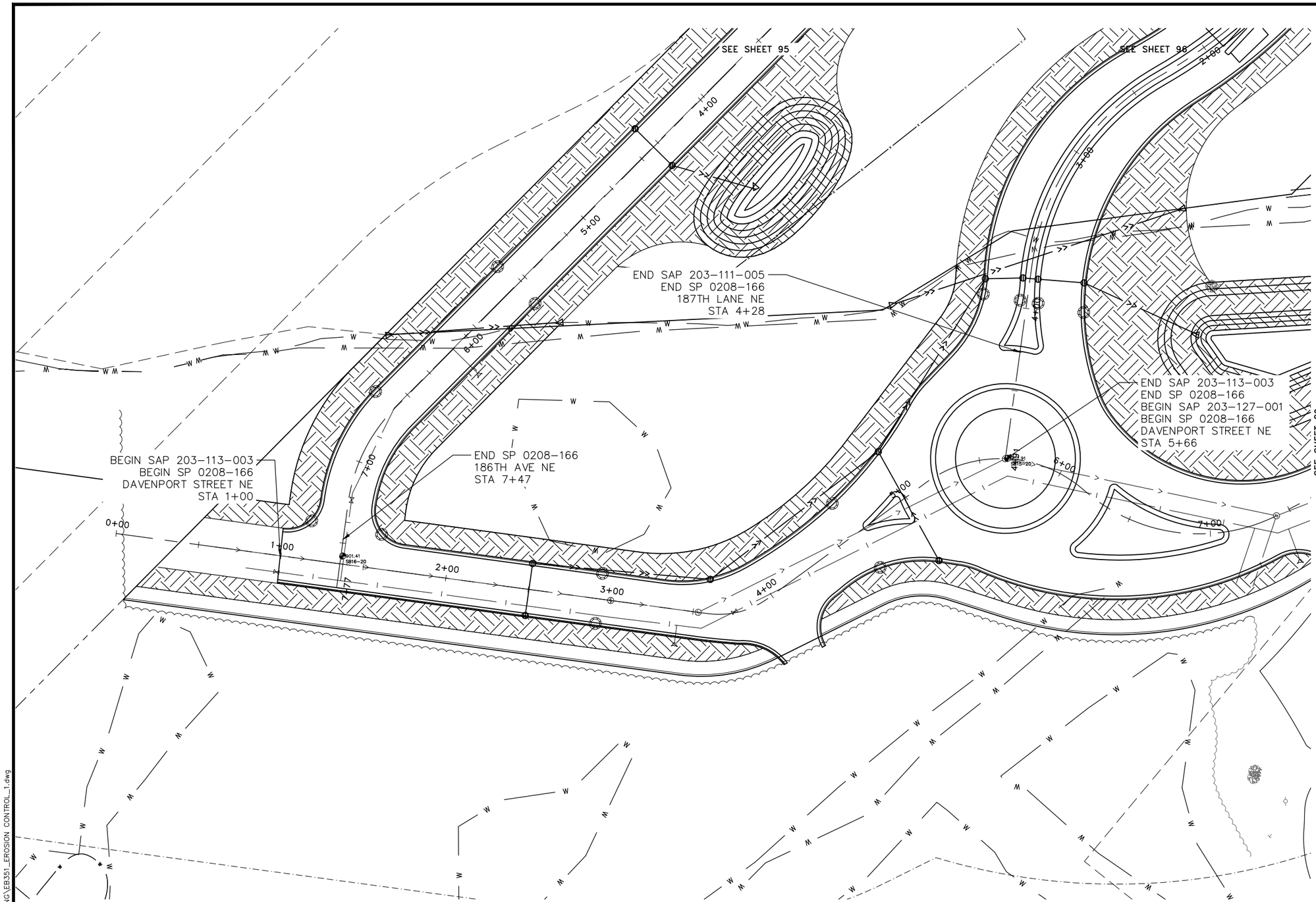

LEGEND

PROPOSED CATEGORY 3 EROSION CONTROL BLANKET, SEED MIXTURE 25-121 OR 35-221 AND TYPE 3 FERTILIZER ②③

PROPOSED INLET PROTECTION ①

GENERAL NOTES:

1. ALL DISTURBED AREAS REQUIRE 4" OF SALVAGED TOPSOIL, SEED, FERTILIZER AND EITHER TYPE 1 MULCH OR CATEGORY 3 EROSION CONTROL BLANKET. TURF ESTABLISHMENT SHALL CONFORM TO MN/DOT STANDARD SPECIFICATIONS. AREAS REQUIRING EROSION CONTROL BLANKET DO NOT REQUIRE TYPE 1 MULCH.
2. SEE SHEET 6 FOR APPLICATION RATES FOR MULCH, SEED AND FERTILIZER.
3. ALL CULVERTS, UPSTREAM AND DOWNSTREAM, SHALL BE STABILIZED WITHIN 24 HOURS OF POTENTIAL TO DISCHARGE.

REFERENCE NOTES:

① SEE SHEET 26 FOR INLET PROTECTION.

② CATEGORY 3 EROSION CONTROL BLANKET SHALL BE WOOD FIBER WITH NATURAL NETTING MEETING THE REQUIREMENTS OF MN/DOT SPEC. 3885.

③ SEED MIXTURE 35-221 SHALL BE USED IN WETLAND AREAS AS DETERMINED BY THE ENGINEER. SEED MIXTURE 25-121 SHALL BE USED IN ALL OTHER LOCATIONS.

30 0 30 60
SCALE IN FEET

DATE	REVISION

I hereby certify that this plan, specification, or report was prepared by me or under my direct supervision and that I am a duly Licensed Professional Engineer under the laws of the State of Minnesota.

CRAIG J. JOCHUM, P.E.
Date 8/7/20 Lic. No. 23461

DESIGNED BY: CJJ
DRAWN BY: SGJ
CHECKED BY: TAE

Hakanson Anderson
Civil Engineers and Land Surveyors
3601 Thurston Ave., Anoka, Minnesota 55303
763-427-5860 FAX 763-427-0520
www.hakanson-anderson.com

STATE PROJ. NO 0208-166 (TH65=005)
SAP 203-127-001, SAP 203-111-005,
SAP 203-113-003

EROSION CONTROL PLANS

DAVENPORT STREET NE
TH 65 EAST SERVICE ROAD PROJECT

EB351

Aug 19, 2020 - 1:18pm
K:\MUNICIPAL\EB351\ENGINEERING\EB351_EROSION CONTROL_1.dwg

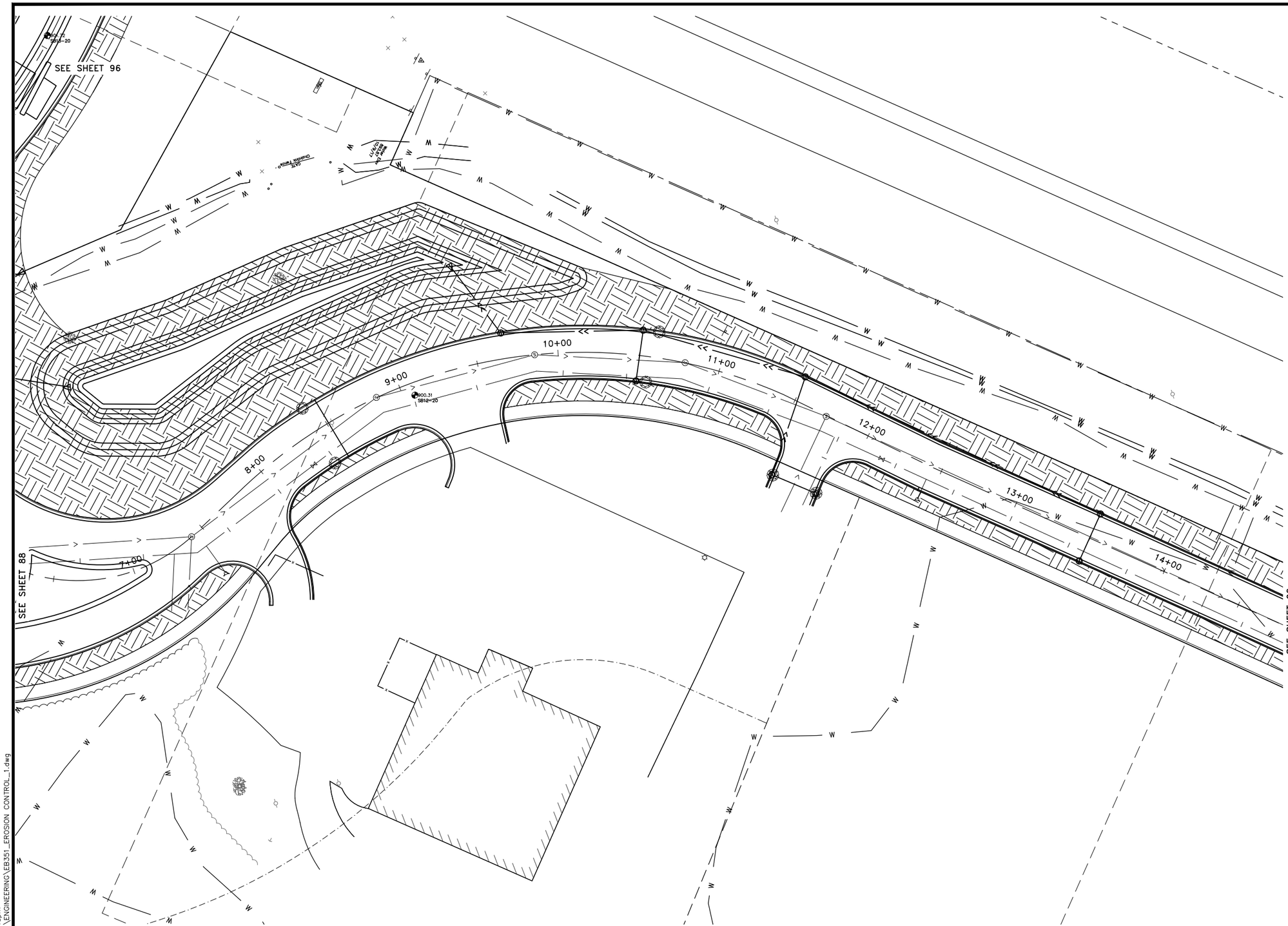

LEGEND

PROPOSED CATEGORY 3 EROSION CONTROL BLANKET, SEED MIXTURE 25-121 OR 35-221 AND TYPE 3 FERTILIZER ②③

PROPOSED INLET PROTECTION ①

GENERAL NOTES:

1. ALL DISTURBED AREAS REQUIRE 4" OF SALVAGED TOPSOIL, SEED, FERTILIZER AND EITHER TYPE 1 MULCH OR CATEGORY 3 EROSION CONTROL BLANKET. TURF ESTABLISHMENT SHALL CONFORM TO MN/DOT STANDARD SPECIFICATIONS. AREAS REQUIRING EROSION CONTROL BLANKET DO NOT REQUIRE TYPE 1 MULCH.
2. SEE SHEET 6 FOR APPLICATION RATES FOR MULCH, SEED AND FERTILIZER.
3. ALL CULVERTS, UPSTREAM AND DOWNSTREAM, SHALL BE STABILIZED WITHIN 24 HOURS OF POTENTIAL TO DISCHARGE.

REFERENCE NOTES:

① SEE SHEET 26 FOR INLET PROTECTION.
② CATEGORY 3 EROSION CONTROL BLANKET SHALL BE WOOD FIBER WITH NATURAL NETTING MEETING THE REQUIREMENTS OF MN/DOT SPEC. 3885.
③ SEED MIXTURE 35-221 SHALL BE USED IN WETLAND AREAS AS DETERMINED BY THE ENGINEER. SEED MIXTURE 25-121 SHALL BE USED IN ALL OTHER LOCATIONS.

30 0 30 60
SCALE IN FEET

DATE	REVISION

I hereby certify that this plan, specification, or report was prepared by me or under my direct supervision and that I am a duly Licensed Professional Engineer under the laws of the State of Minnesota.

CRAIG J. JOCHUM, P.E.
Date 8/7/20 Lic. No. 23461

DESIGNED BY: CJJ
DRAWN BY: SGJ
CHECKED BY: TAE

Hakanson Anderson
Civil Engineers and Land Surveyors
3601 Thurston Ave., Anoka, Minnesota 55303
763-427-5860 FAX 763-427-0520
www.hakanson-anderson.com

STATE PROJ. NO 0208-166 (TH65=005)
SAP 203-127-001, SAP 203-111-005,
SAP 203-113-003

EROSION CONTROL PLANS

DAVENPORT STREET NE
TH 65 EAST SERVICE ROAD PROJECT

SHEET 89 OF 109 SHEETS

EB351

Aug 19, 2020 - 1:18pm
K:\MUNICIPAL\EB351\ENGINEERING\EB351_EROSION CONTROL_1.dwg

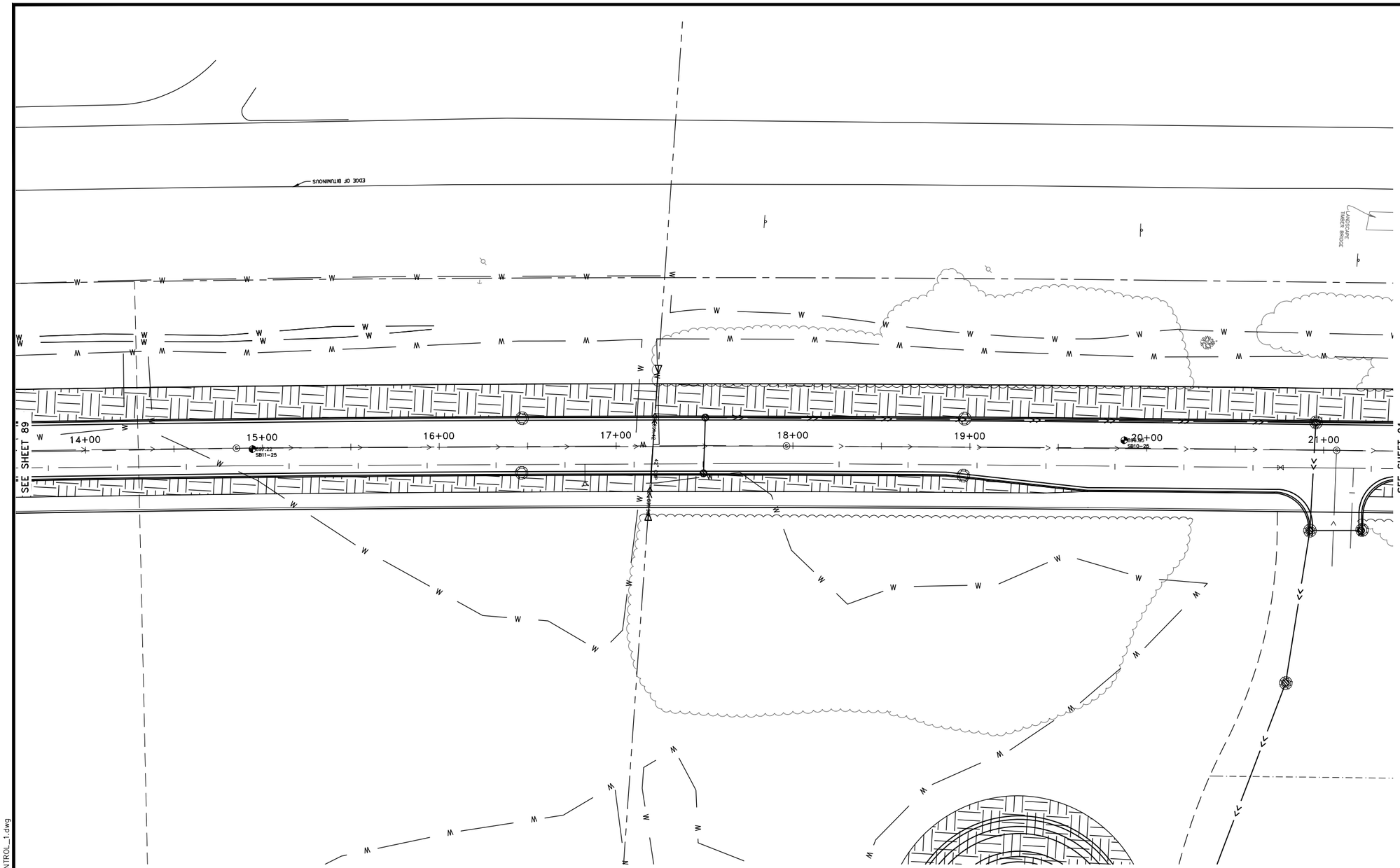

LEGEND

PROPOSED CATEGORY 3 EROSION CONTROL BLANKET, SEED MIXTURE 25-121 OR 35-221 AND TYPE 3 FERTILIZER ②③

PROPOSED INLET PROTECTION ①

GENERAL NOTES:

1. ALL DISTURBED AREAS REQUIRE 4" OF SALVAGED TOPSOIL, SEED, FERTILIZER AND EITHER TYPE 1 MULCH OR CATEGORY 3 EROSION CONTROL BLANKET. TURF ESTABLISHMENT SHALL CONFORM TO MN/DOT STANDARD SPECIFICATIONS. AREAS REQUIRING EROSION CONTROL BLANKET DO NOT REQUIRE TYPE 1 MULCH.
2. SEE SHEET 6 FOR APPLICATION RATES FOR MULCH, SEED AND FERTILIZER.
3. ALL CULVERTS, UPSTREAM AND DOWNSTREAM, SHALL BE STABILIZED WITHIN 24 HOURS OF POTENTIAL TO DISCHARGE.

REFERENCE NOTES:

① SEE SHEET 26 FOR INLET PROTECTION.
② CATEGORY 3 EROSION CONTROL BLANKET SHALL BE WOOD FIBER WITH NATURAL NETTING MEETING THE REQUIREMENTS OF MN/DOT SPEC. 3885.
③ SEED MIXTURE 35-221 SHALL BE USED IN WETLAND AREAS AS DETERMINED BY THE ENGINEER. SEED MIXTURE 25-121 SHALL BE USED IN ALL OTHER LOCATIONS.

30 0 30 60
SCALE IN FEET

DATE	REVISION

I hereby certify that this plan, specification, or report was prepared by me or under my direct supervision and that I am a duly Licensed Professional Engineer under the laws of the State of Minnesota.

CRAIG J. JOCHUM, P.E.
Date 8/7/20 Lic. No. 23461

DESIGNED BY: CJJ
DRAWN BY: SGJ
CHECKED BY: TAE

Hakanson Anderson
Civil Engineers and Land Surveyors
3601 Thurston Ave., Anoka, Minnesota 55303
763-427-5860 FAX 763-427-0520
www.hakanson-anderson.com

STATE PROJ. NO 0208-166 (TH65=005)
SAP 203-127-001, SAP 203-111-005,
SAP 203-113-003

EROSION CONTROL PLANS

DAVENPORT STREET NE
TH 65 EAST SERVICE ROAD PROJECT

EB351

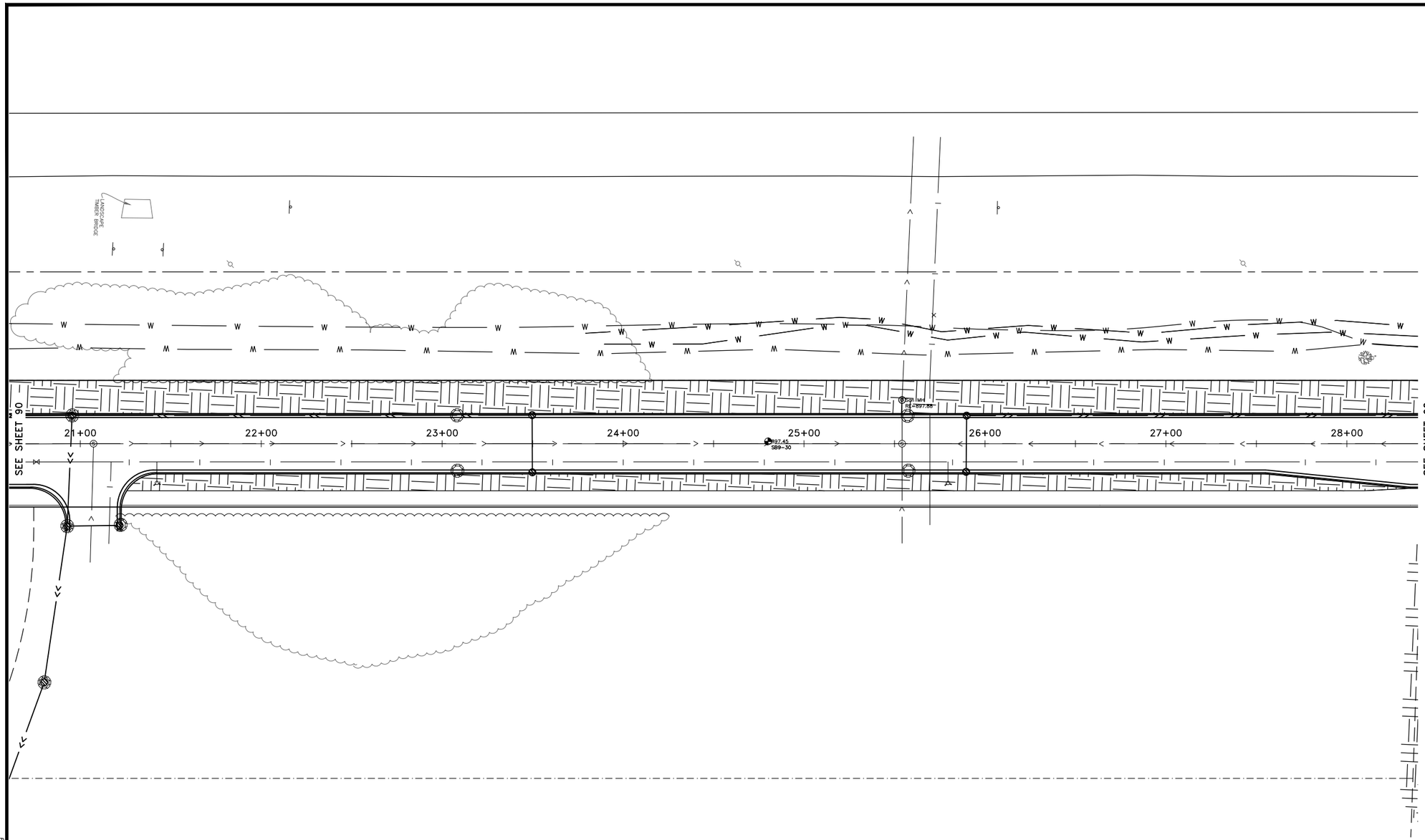

LEGEND

PROPOSED CATEGORY 3 EROSION CONTROL BLANKET, SEED MIXTURE 25-121 OR 35-221 AND TYPE 3 FERTILIZER ②③

PROPOSED INLET PROTECTION ①

GENERAL NOTES:

1. ALL DISTURBED AREAS REQUIRE 4" OF SALVAGED TOPSOIL, SEED, FERTILIZER AND EITHER TYPE 1 MULCH OR CATEGORY 3 EROSION CONTROL BLANKET. TURF ESTABLISHMENT SHALL CONFORM TO MN/DOT STANDARD SPECIFICATIONS. AREAS REQUIRING EROSION CONTROL BLANKET DO NOT REQUIRE TYPE 1 MULCH.
2. SEE SHEET 6 FOR APPLICATION RATES FOR MULCH, SEED AND FERTILIZER.
3. ALL CULVERTS, UPSTREAM AND DOWNSTREAM, SHALL BE STABILIZED WITHIN 24 HOURS OF POTENTIAL TO DISCHARGE.

REFERENCE NOTES:

① SEE SHEET 26 FOR INLET PROTECTION.

② CATEGORY 3 EROSION CONTROL BLANKET SHALL BE WOOD FIBER WITH NATURAL NETTING MEETING THE REQUIREMENTS OF MN/DOT SPEC. 3885.

③ SEED MIXTURE 35-221 SHALL BE USED IN WETLAND AREAS AS DETERMINED BY THE ENGINEER. SEED MIXTURE 25-121 SHALL BE USED IN ALL OTHER LOCATIONS.

N

30 0 30 60
SCALE IN FEET

Aug 19, 2020 – 1:18pm
K:\MUNICIPAL\EB351\ENGINEERING\EB351_EROSION CONTROL_1.dwg

DATE	REVISION

I hereby certify that this plan, specification, or report was prepared by me or under my direct supervision and that I am a duly Licensed Professional Engineer under the laws of the State of Minnesota.

CRAIG J. JOCHUM, P.E.
Date 8/7/20 Lic. No. 23461

DESIGNED BY: CJJ
DRAWN BY: SGJ
CHECKED BY: TAE

Hakanson Anderson
Civil Engineers and Land Surveyors
3601 Thurston Ave., Anoka, Minnesota 55303
763-427-5860 FAX 763-427-0520
www.hakanson-anderson.com

STATE PROJ. NO 0208-166 (TH65=005)
SAP 203-127-001, SAP 203-111-005,
SAP 203-113-003

EROSION CONTROL PLANS

DAVENPORT STREET NE
TH 65 EAST SERVICE ROAD PROJECT

EB351

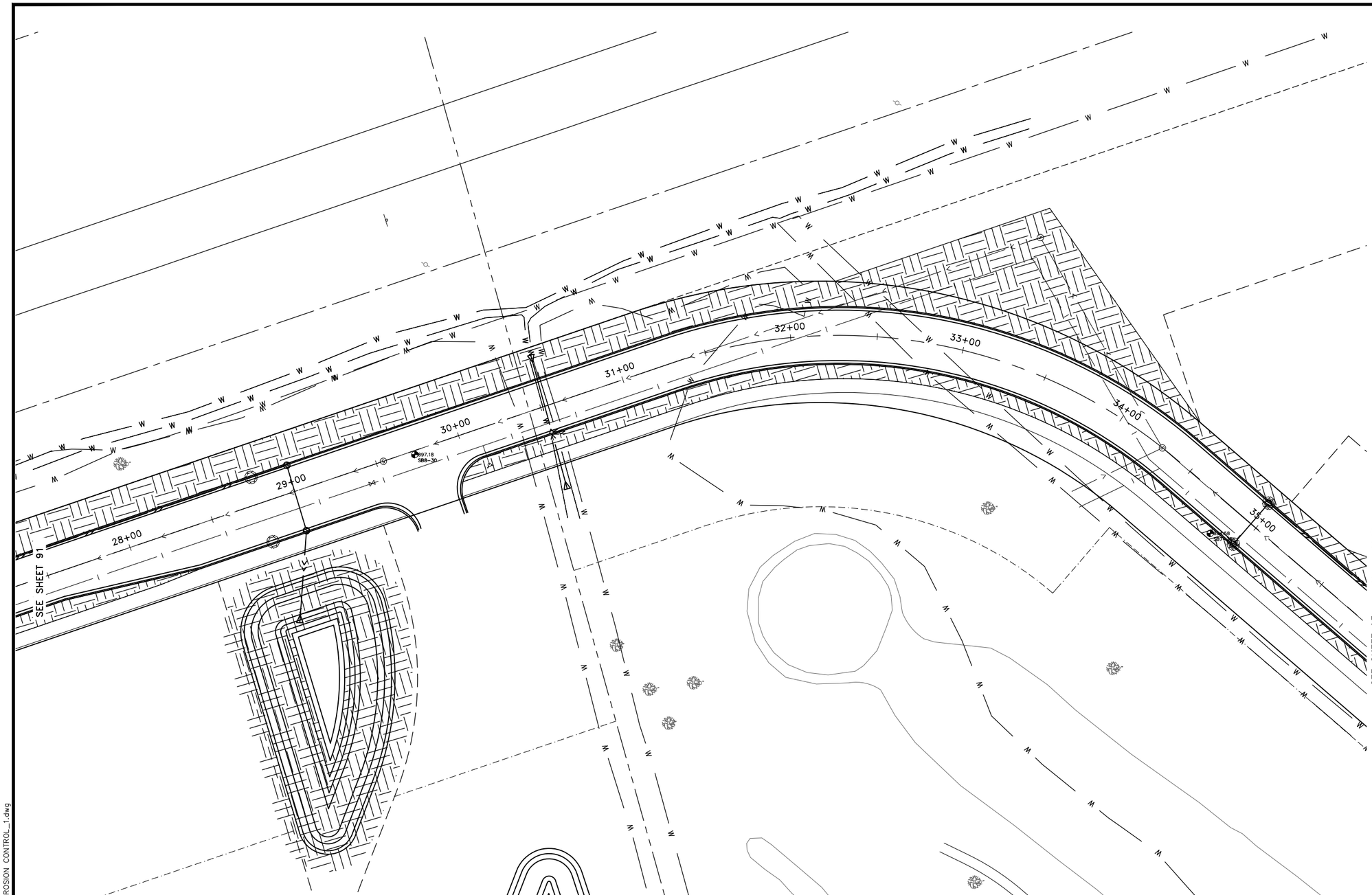

LEGEND

PROPOSED CATEGORY 3 EROSION CONTROL BLANKET, SEED MIXTURE 25-121 OR 35-221 AND TYPE 3 FERTILIZER ②③

PROPOSED INLET PROTECTION ①

GENERAL NOTES:

1. ALL DISTURBED AREAS REQUIRE 4" OF SALVAGED TOPSOIL, SEED, FERTILIZER AND EITHER TYPE 1 MULCH OR CATEGORY 3 EROSION CONTROL BLANKET. TURF ESTABLISHMENT SHALL CONFORM TO MN/DOT STANDARD SPECIFICATIONS. AREAS REQUIRING EROSION CONTROL BLANKET DO NOT REQUIRE TYPE 1 MULCH.
2. SEE SHEET 6 FOR APPLICATION RATES FOR MULCH, SEED AND FERTILIZER.
3. ALL CULVERTS, UPSTREAM AND DOWNSTREAM, SHALL BE STABILIZED WITHIN 24 HOURS OF POTENTIAL TO DISCHARGE.

REFERENCE NOTES:

① SEE SHEET 26 FOR INLET PROTECTION.
② CATEGORY 3 EROSION CONTROL BLANKET SHALL BE WOOD FIBER WITH NATURAL NETTING MEETING THE REQUIREMENTS OF MN/DOT SPEC. 3885.
③ SEED MIXTURE 35-221 SHALL BE USED IN WETLAND AREAS AS DETERMINED BY THE ENGINEER. SEED MIXTURE 25-121 SHALL BE USED IN ALL OTHER LOCATIONS.

30 0 30 60
SCALE IN FEET

DATE	REVISION

I hereby certify that this plan, specification, or report was prepared by me or under my direct supervision and that I am a duly Licensed Professional Engineer under the laws of the State of Minnesota.

CRAIG J. JOCHUM, P.E.
Date 8/7/20 Lic. No. 23461

DESIGNED BY: CJJ
DRAWN BY: SGJ
CHECKED BY: TAE

Hakanson Anderson
Civil Engineers and Land Surveyors
3601 Thurston Ave., Anoka, Minnesota 55303
763-427-5860 FAX 763-427-0520
www.hakanson-anderson.com

STATE PROJ. NO 0208-166 (TH65=005)
SAP 203-127-001, SAP 203-111-005,
SAP 203-113-003

EROSION CONTROL PLANS

DAVENPORT STREET NE
TH 65 EAST SERVICE ROAD PROJECT

EB351

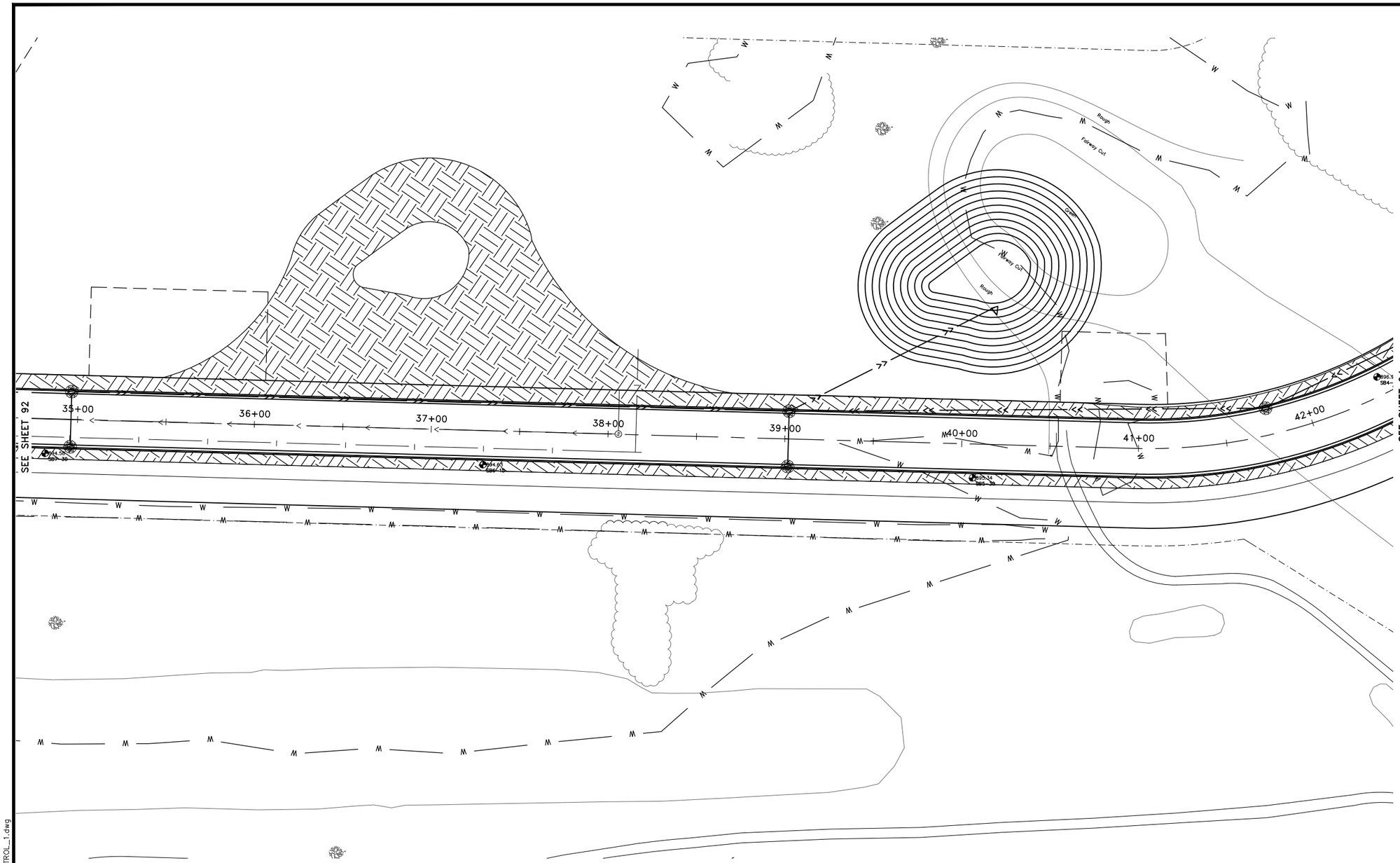

LEGEND

PROPOSED CATEGORY 3 EROSION CONTROL BLANKET, SEED MIXTURE 25-121 OR 35-221 AND TYPE 3 FERTILIZER ②③

PROPOSED INLET PROTECTION ①

GENERAL NOTES:

1. ALL DISTURBED AREAS REQUIRE 4" OF SALVAGED TOPSOIL, SEED, FERTILIZER AND EITHER TYPE 1 MULCH OR CATEGORY 3 EROSION CONTROL BLANKET. TURF ESTABLISHMENT SHALL CONFORM TO MN/DOT STANDARD SPECIFICATIONS. AREAS REQUIRING EROSION CONTROL BLANKET DO NOT REQUIRE TYPE 1 MULCH.
2. SEE SHEET 6 FOR APPLICATION RATES FOR MULCH, SEED AND FERTILIZER.
3. ALL CULVERTS, UPSTREAM AND DOWNSTREAM, SHALL BE STABILIZED WITHIN 24 HOURS OF POTENTIAL TO DISCHARGE.

REFERENCE NOTES:

① SEE SHEET 26 FOR INLET PROTECTION.
② CATEGORY 3 EROSION CONTROL BLANKET SHALL BE WOOD FIBER WITH NATURAL NETTING MEETING THE REQUIREMENTS OF MN/DOT SPEC. 3885.
③ SEED MIXTURE 35-221 SHALL BE USED IN WETLAND AREAS AS DETERMINED BY THE ENGINEER. SEED MIXTURE 25-121 SHALL BE USED IN ALL OTHER LOCATIONS.

30 0 30 60
SCALE IN FEET

DATE	REVISION

I hereby certify that this plan, specification, or report was prepared by me or under my direct supervision and that I am a duly Licensed Professional Engineer under the laws of the State of Minnesota.

CRAIG J. JOCHUM, P.E.
Date 8/7/20 Lic. No. 23461

DESIGNED BY: CJJ
DRAWN BY: SGJ
CHECKED BY: TAE

Hakanson Anderson
Civil Engineers and Land Surveyors
3601 Thurston Ave., Anoka, Minnesota 55303
763-427-5860 FAX 763-427-0520
www.hakanson-anderson.com

STATE PROJ. NO 0208-166 (TH65=005)
SAP 203-127-001, SAP 203-111-005,
SAP 203-113-003

EROSION CONTROL PLANS

DAVENPORT STREET NE
TH 65 EAST SERVICE ROAD PROJECT

EB351

Aug 19, 2020 - 1:18pm
K:\MUNICIPAL\EB351\ENGINEERING\EB351_EROSION CONTROL_1.dwg

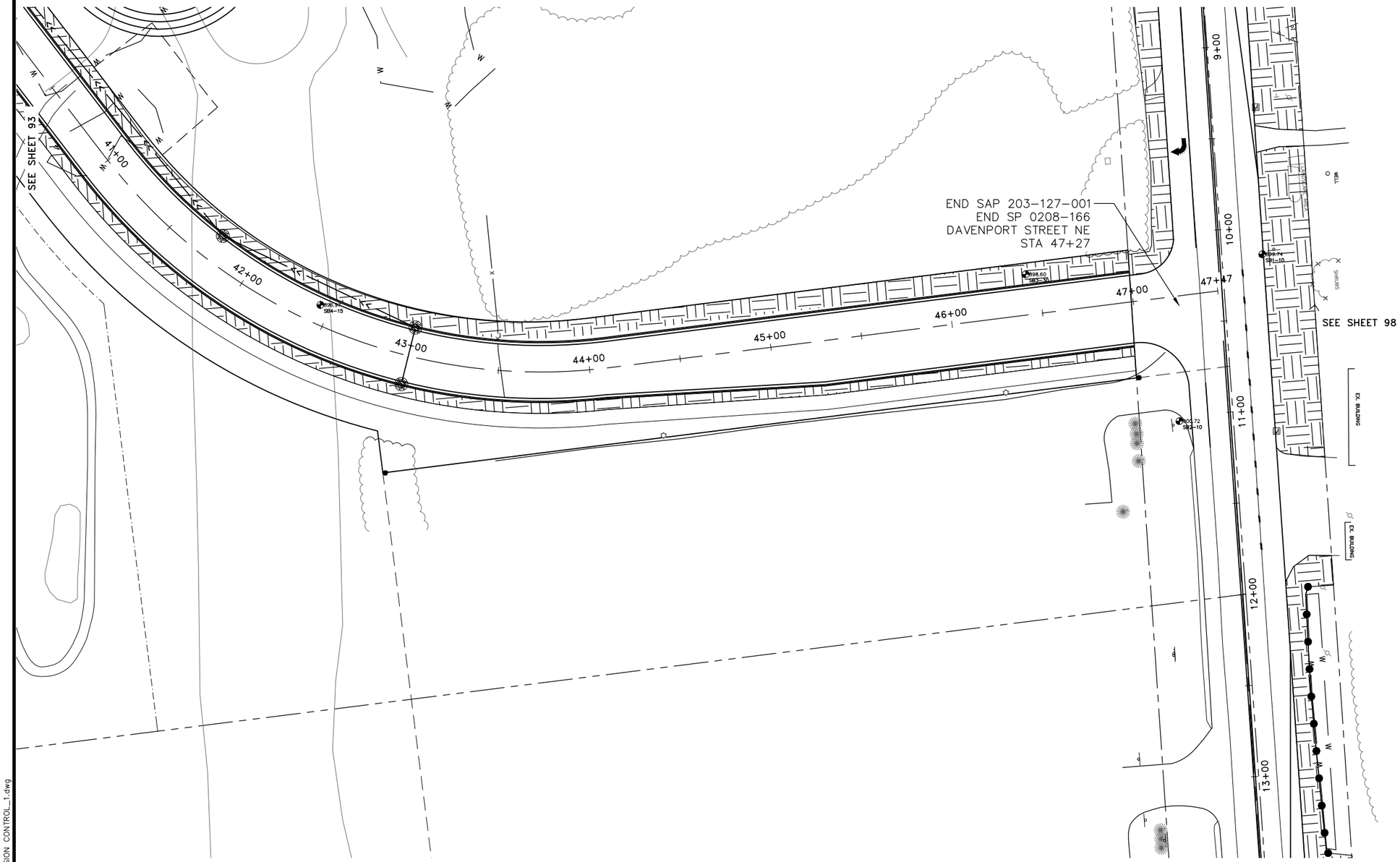

LEGEND

PROPOSED CATEGORY 3 EROSION CONTROL BLANKET, SEED MIXTURE 25-121 OR 35-221 AND TYPE 3 FERTILIZER ②③

PROPOSED INLET PROTECTION ①

GENERAL NOTES:

1. ALL DISTURBED AREAS REQUIRE 4" OF SALVAGED TOPSOIL, SEED, FERTILIZER AND EITHER TYPE 1 MULCH OR CATEGORY 3 EROSION CONTROL BLANKET. TURF ESTABLISHMENT SHALL CONFORM TO MN/DOT STANDARD SPECIFICATIONS. AREAS REQUIRING EROSION CONTROL BLANKET DO NOT REQUIRE TYPE 1 MULCH.
2. SEE SHEET 6 FOR APPLICATION RATES FOR MULCH, SEED AND FERTILIZER.
3. ALL CULVERTS, UPSTREAM AND DOWNSTREAM, SHALL BE STABILIZED WITHIN 24 HOURS OF POTENTIAL TO DISCHARGE.

REFERENCE NOTES:

① SEE SHEET 26 FOR INLET PROTECTION.

② CATEGORY 3 EROSION CONTROL BLANKET SHALL BE WOOD FIBER WITH NATURAL NETTING MEETING THE REQUIREMENTS OF MN/DOT SPEC. 3885.

③ SEED MIXTURE 35-221 SHALL BE USED IN WETLAND AREAS AS DETERMINED BY THE ENGINEER. SEED MIXTURE 25-121 SHALL BE USED IN ALL OTHER LOCATIONS.

N

30 0 30 60
SCALE IN FEET

DATE	REVISION

I hereby certify that this plan, specification, or report was prepared by me or under my direct supervision and that I am a duly Licensed Professional Engineer under the laws of the State of Minnesota.

CRAIG J. JOCHUM, P.E.
Date 8/7/20 Lic. No. 23461

DESIGNED BY: CJJ
DRAWN BY: SGJ
CHECKED BY: TAE

Hakanson Anderson
Civil Engineers and Land Surveyors
3601 Thurston Ave., Anoka, Minnesota 55303
763-427-5860 FAX 763-427-0520
www.hakanson-anderson.com

STATE PROJ. NO 0208-166 (TH65=005)
SAP 203-127-001, SAP 203-111-005,
SAP 203-113-003

EROSION CONTROL PLANS

DAVENPORT STREET NE
TH 65 EAST SERVICE ROAD PROJECT

EB351

Aug 19, 2020 - 1:18pm
K:\MUNICIPAL\EB351\ENGINEERING\EB351_EROSION CONTROL_1.dwg

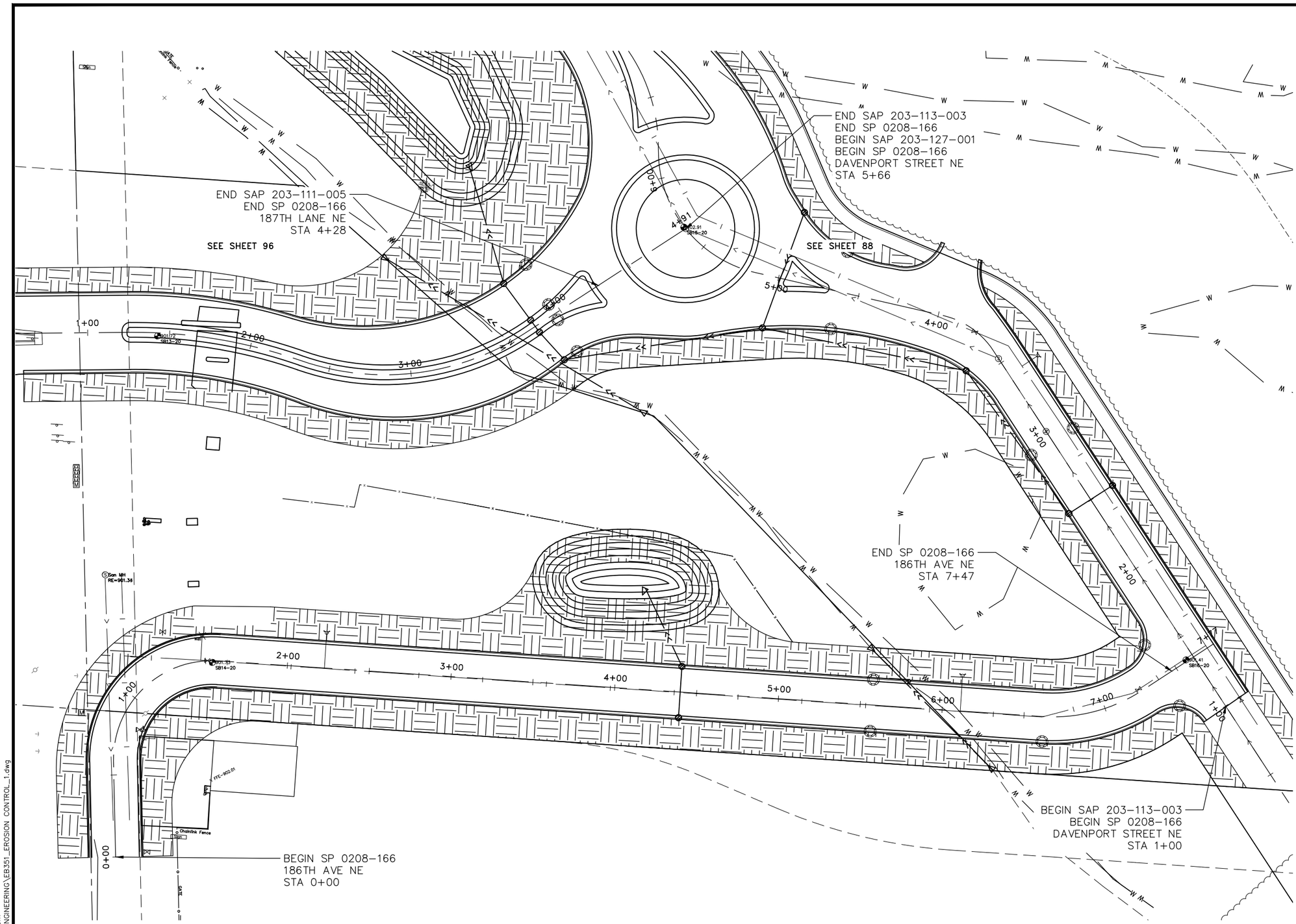

LEGEND

PROPOSED CATEGORY 3 EROSION CONTROL BLANKET, SEED MIXTURE 25-121 OR 35-221 AND TYPE 3 FERTILIZER ②③

PROPOSED INLET PROTECTION ①

GENERAL NOTES:

1. ALL DISTURBED AREAS REQUIRE 4" OF SALVAGED TOPSOIL, SEED, FERTILIZER AND EITHER TYPE 1 MULCH OR CATEGORY 3 EROSION CONTROL BLANKET. TURF ESTABLISHMENT SHALL CONFORM TO MN/DOT STANDARD SPECIFICATIONS. AREAS REQUIRING EROSION CONTROL BLANKET DO NOT REQUIRE TYPE 1 MULCH.
2. SEE SHEET 6 FOR APPLICATION RATES FOR MULCH, SEED AND FERTILIZER.
3. ALL CULVERTS, UPSTREAM AND DOWNSTREAM, SHALL BE STABILIZED WITHIN 24 HOURS OF POTENTIAL TO DISCHARGE.

REFERENCE NOTES:

① SEE SHEET 26 FOR INLET PROTECTION.
② CATEGORY 3 EROSION CONTROL BLANKET SHALL BE WOOD FIBER WITH NATURAL NETTING MEETING THE REQUIREMENTS OF MN/DOT SPEC. 3885.
③ SEED MIXTURE 35-221 SHALL BE USED IN WETLAND AREAS AS DETERMINED BY THE ENGINEER. SEED MIXTURE 25-121 SHALL BE USED IN ALL OTHER LOCATIONS.

N

30 0 30 60
SCALE IN FEET

DATE	REVISION

I hereby certify that this plan, specification, or report was prepared by me or under my direct supervision and that I am a duly Licensed Professional Engineer under the laws of the State of Minnesota.

CRAIG J. JOCHUM, P.E.
Date 8/7/20 Lic. No. 23461

DESIGNED BY: CJJ
DRAWN BY: SGJ
CHECKED BY: TAE

Hakanson Anderson
Civil Engineers and Land Surveyors
3601 Thurston Ave., Anoka, Minnesota 55303
763-427-5860 FAX 763-427-0520
www.hakanson-anderson.com

STATE PROJ. NO 0208-166 (TH65=005)
SAP 203-127-001, SAP 203-111-005,
SAP 203-113-003

EROSION CONTROL PLANS

186TH AVE NE
TH 65 EAST SERVICE ROAD PROJECT

Aug 19, 2020 - 1:18pm
K:\MUNICIPAL\EB351\ENGINEERING\EB351_EROSION CONTROL_1.dwg

LEGEND

PROPOSED CATEGORY 3 EROSION CONTROL BLANKET, SEED MIXTURE 25-121 OR 35-221 AND TYPE 3 FERTILIZER ②③

PROPOSED INLET PROTECTION ①

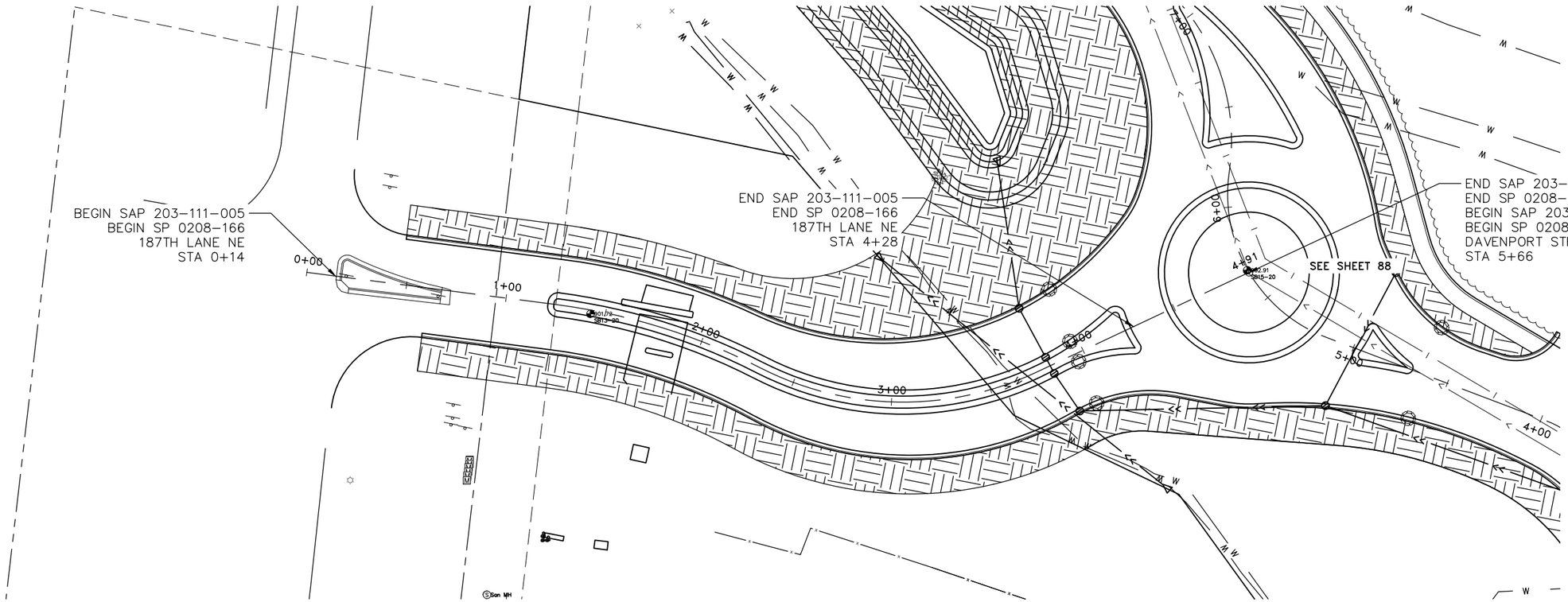

GENERAL NOTES:

1. ALL DISTURBED AREAS REQUIRE 4" OF SALVAGED TOPSOIL, SEED, FERTILIZER AND EITHER TYPE 1 MULCH OR CATEGORY 3 EROSION CONTROL BLANKET. TURF ESTABLISHMENT SHALL CONFORM TO MN/DOT STANDARD SPECIFICATIONS. AREAS REQUIRING EROSION CONTROL BLANKET DO NOT REQUIRE TYPE 1 MULCH.
2. SEE SHEET 6 FOR APPLICATION RATES FOR MULCH, SEED AND FERTILIZER.
3. ALL CULVERTS, UPSTREAM AND DOWNSTREAM, SHALL BE STABILIZED WITHIN 24 HOURS OF POTENTIAL TO DISCHARGE.

REFERENCE NOTES:

① SEE SHEET 26 FOR INLET PROTECTION.
② CATEGORY 3 EROSION CONTROL BLANKET SHALL BE WOOD FIBER WITH NATURAL NETTING MEETING THE REQUIREMENTS OF MN/DOT SPEC. 3885.
③ SEED MIXTURE 35-221 SHALL BE USED IN WETLAND AREAS AS DETERMINED BY THE ENGINEER. SEED MIXTURE 25-121 SHALL BE USED IN ALL OTHER LOCATIONS.

N

30 0 30 60
SCALE IN FEET

DATE	REVISION

I hereby certify that this plan, specification, or report was prepared by me or under my direct supervision and that I am a duly Licensed Professional Engineer under the laws of the State of Minnesota.

CRAIG J. JOCHUM, P.E.
Date 8/7/20 Lic. No. 23461

DESIGNED BY: CJJ
DRAWN BY: SGJ
CHECKED BY: TAE

Hakanson Anderson
Civil Engineers and Land Surveyors
3601 Thurston Ave., Anoka, Minnesota 55303
763-427-5860 FAX 763-427-0520
www.hakanson-anderson.com

STATE PROJ. NO 0208-166 (TH65=005)
SAP 203-127-001, SAP 203-111-005,
SAP 203-113-003

EROSION CONTROL PLANS

187TH LANE NE
TH 65 EAST SERVICE ROAD PROJECT

EB351

Aug 19, 2020 - 1:18pm
K:\MUNICIPAL\EB351\ENGINEERING\EB351_EROSION CONTROL_1.dwg

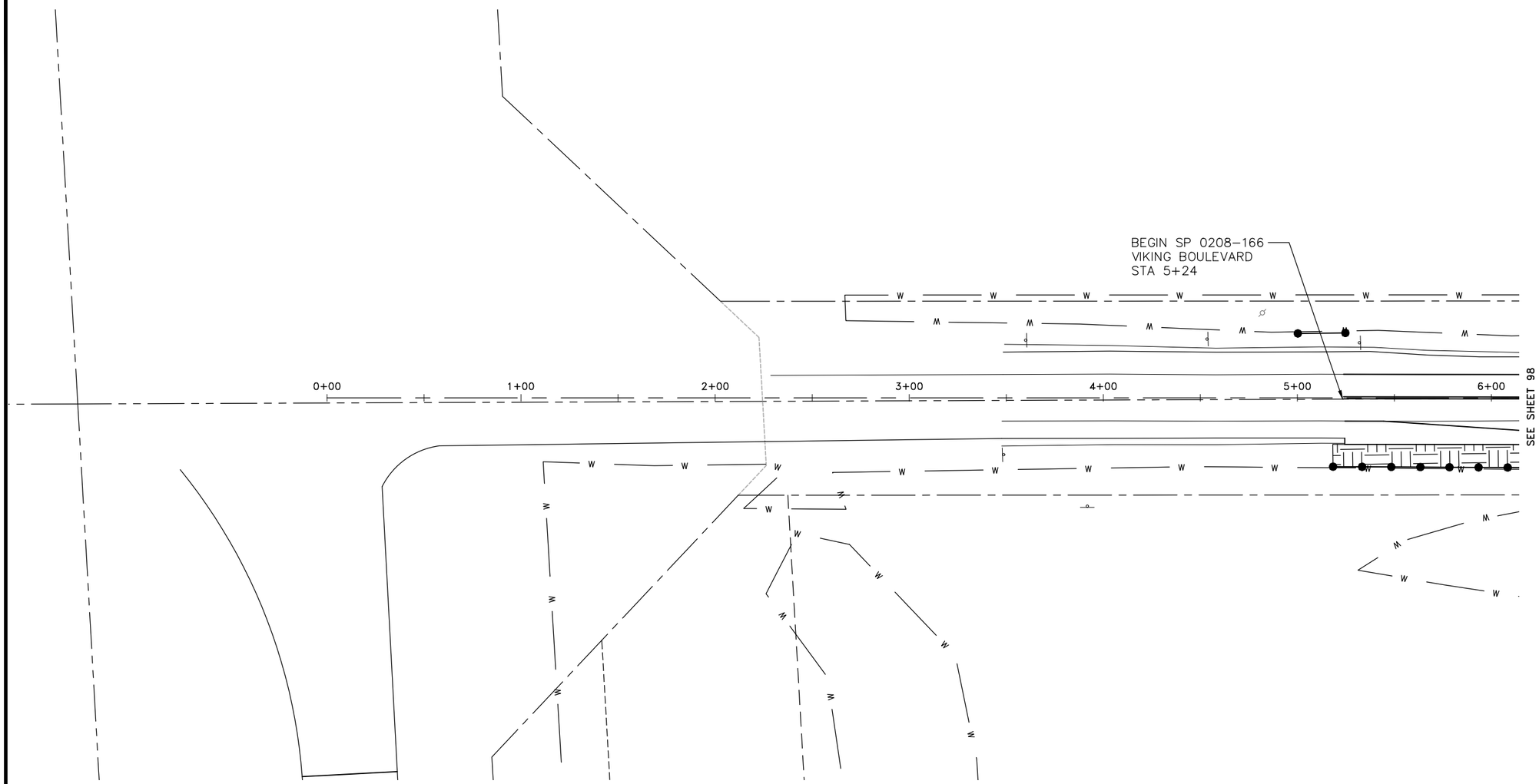

LEGEND

PROPOSED CATEGORY 3 EROSION CONTROL BLANKET, SEED MIXTURE 25-121 ①

SILT FENCE

GENERAL NOTES:

1 ALL WORK WITHIN THE ANOKA COUNTY HIGHWAY DEPARTMENT RIGHT OF WAY SHALL BE IN ACCORDANCE WITH THE 2018 MN/DOT STANDARD SPECIFICATIONS FOR CONSTRUCTION.
2 SEE SHEETS 53-56 FOR REMOVALS.
3 SEE SHEETS 74-76 FOR CONSTRUCTION.
4 SEE SHEETS 106-107 FOR SIGNING AND STRIPING.
5 SEE SHEETS 108-109 FOR TRAFFIC CONTROL.
6 SEE SHEETS X1-X3 FOR CROSS-SECTIONS.
7 ALL DISTURBED AREAS REQUIRE 4" OF SALVAGED TOPSOIL, SEED, FERTILIZER AND CATEGORY 3 EROSION CONTROL BLANKET. TURF ESTABLISHMENT SHALL CONFORM TO MN/DOT STANDARD SPECIFICATIONS.
8 SEE SHEET 6 FOR APPLICATION RATES FOR SEED AND FERTILIZER.

REFERENCE NOTES:

① CATEGORY 3 EROSION CONTROL BLANKET SHALL BE WOOD FIBER WITH NATURAL NETTING MEETING THE REQUIRMENTS OF MN/DOT SPEC. 3885.

N

30 0 30 60
SCALE IN FEET

DATE	REVISION

I hereby certify that this plan, specification, or report was prepared by me or under my direct supervision and that I am a duly Licensed Professional Engineer under the laws of the State of Minnesota.

Date 8/7/20 CRAIG J. JOCHUM, P.E. Lic. No. 23461

DESIGNED BY: CJJ
DRAWN BY: SGJ
CHECKED BY: TAE

Hakanson Anderson
Civil Engineers and Land Surveyors
3601 Thurston Ave., Anoka, Minnesota 55303
763-427-5860 FAX 763-427-0520
www.hakanson-anderson.com

STATE PROJ. NO 0208-166 (TH65=005)
SAP 203-127-001, SAP 203-111-005,
SAP 203-113-003

EROSION CONTROL PLANS

VIKING BOULEVARD
TH 65 EAST SERVICE ROAD PROJECT

EB351

LEGEND

PROPOSED CATEGORY 3 EROSION CONTROL BLANKET, SEED MIXTURE 25-121 ①

SILT FENCE

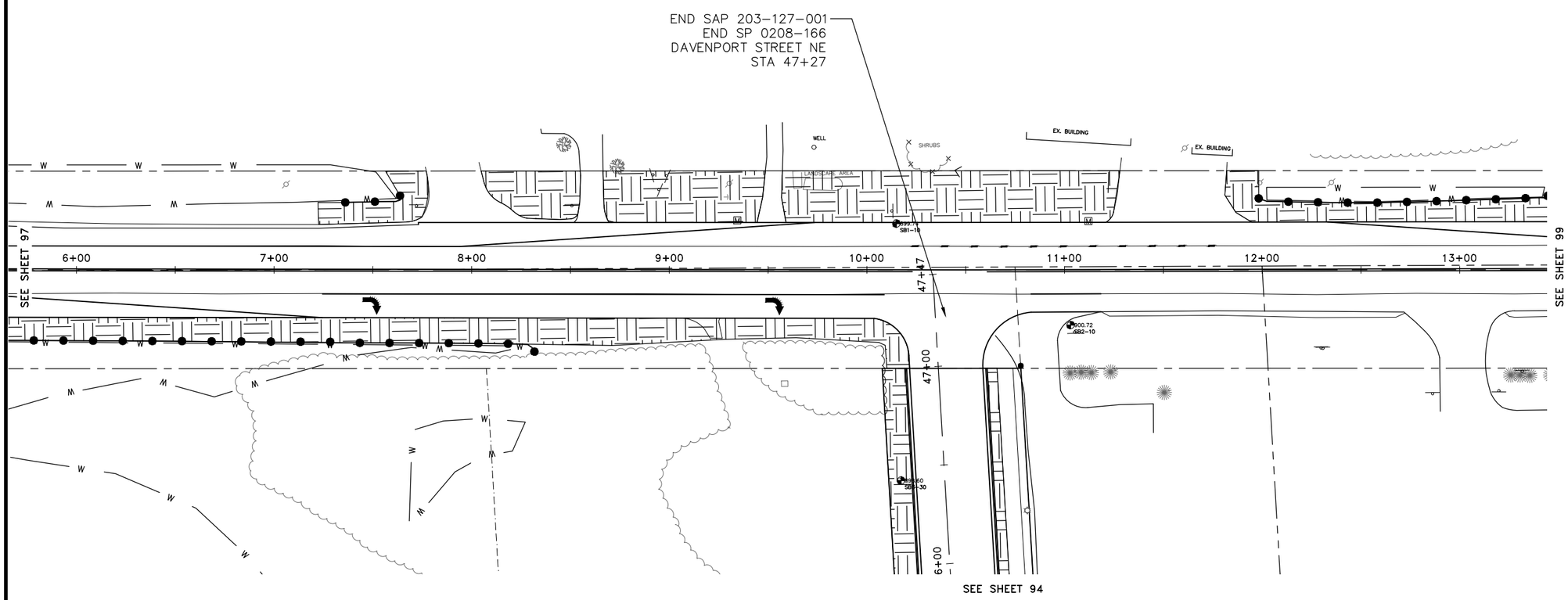

GENERAL NOTES:

1 ALL WORK WITHIN THE ANOKA COUNTY HIGHWAY DEPARTMENT RIGHT OF WAY SHALL BE IN ACCORDANCE WITH THE 2018 MN/DOT STANDARD SPECIFICATIONS FOR CONSTRUCTION.

2 SEE SHEETS 53-56 FOR REMOVALS.

3 SEE SHEETS 74-76 FOR CONSTRUCTION.

4 SEE SHEETS 106-107 FOR SIGNING AND STRIPING.

5 SEE SHEETS 108-109 FOR TRAFFIC CONTROL.

6 SEE SHEETS X1-X3 FOR CROSS-SECTIONS.

7 ALL DISTURBED AREAS REQUIRE 4" OF SALVAGED TOPSOIL, SEED, FERTILIZER AND CATEGORY 3 EROSION CONTROL BLANKET. TURF ESTABLISHMENT SHALL CONFORM TO MN/DOT STANDARD SPECIFICATIONS.

8 SEE SHEET 6 FOR APPLICATION RATES FOR SEED AND FERTILIZER.

REFERENCE NOTES:

① CATEGORY 3 EROSION CONTROL BLANKET SHALL BE WOOD FIBER WITH NATURAL NETTING MEETING THE REQUIRMENTS OF MN/DOT SPEC. 3885.

N

30 0 30 60
SCALE IN FEET

DATE	REVISION

I hereby certify that this plan, specification, or report was prepared by me or under my direct supervision and that I am a duly Licensed Professional Engineer under the laws of the State of Minnesota.

CRAIG J. JOCHUM, P.E.
Date 8/7/20 Lic. No. 23461

DESIGNED BY: CJJ
DRAWN BY: SGJ
CHECKED BY: TAE

Hakanson Anderson
Civil Engineers and Land Surveyors
3601 Thurston Ave., Anoka, Minnesota 55303
763-427-5860 FAX 763-427-0520
www.hakanson-anderson.com

STATE PROJ. NO 0208-166 (TH65=005)
SAP 203-127-001, SAP 203-111-005,
SAP 203-113-003

EROSION CONTROL PLANS

VIKING BOULEVARD
TH 65 EAST SERVICE ROAD PROJECT

EB351

Aug 19, 2020 – 1:18pm
K:\MUNICIPAL\EB351\ENGINEERING\EB351_EROSION CONTROL_1.dwg

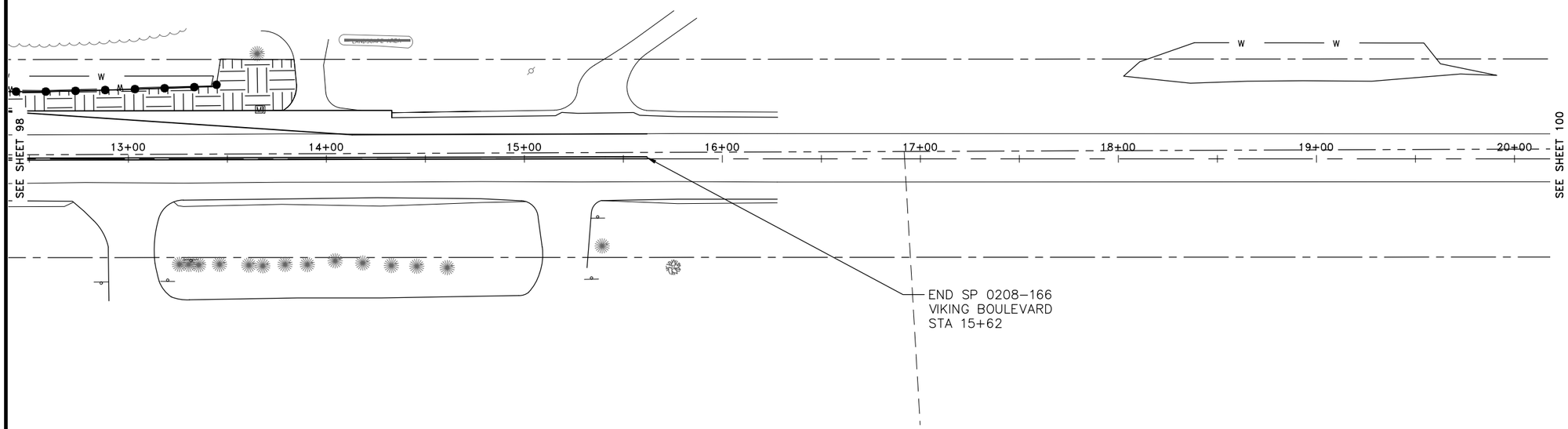

LEGEND

PROPOSED CATEGORY 3 EROSION CONTROL BLANKET, SEED MIXTURE 25-121 ①

SILT FENCE

GENERAL NOTES:

1 ALL WORK WITHIN THE ANOKA COUNTY HIGHWAY DEPARTMENT RIGHT OF WAY SHALL BE IN ACCORDANCE WITH THE 2018 MN/DOT STANDARD SPECIFICATIONS FOR CONSTRUCTION.
2 SEE SHEETS 53-56 FOR REMOVALS.
3 SEE SHEETS 74-76 FOR CONSTRUCTION.
4 SEE SHEETS 106-107 FOR SIGNING AND STRIPING.
5 SEE SHEETS 108-109 FOR TRAFFIC CONTROL.
6 SEE SHEETS X1-X3 FOR CROSS-SECTIONS.
7 ALL DISTURBED AREAS REQUIRE 4" OF SALVAGED TOPSOIL, SEED, FERTILIZER AND CATEGORY 3 EROSION CONTROL BLANKET. TURF ESTABLISHMENT SHALL CONFORM TO MN/DOT STANDARD SPECIFICATIONS.
8 SEE SHEET 6 FOR APPLICATION RATES FOR SEED AND FERTILIZER.

REFERENCE NOTES:

① CATEGORY 3 EROSION CONTROL BLANKET SHALL BE WOOD FIBER WITH NATURAL NETTING MEETING THE REQUIRMENTS OF MN/DOT SPEC. 3885.

N

30 0 30 60
SCALE IN FEET

DATE	REVISION

I hereby certify that this plan, specification, or report was prepared by me or under my direct supervision and that I am a duly Licensed Professional Engineer under the laws of the State of Minnesota.

CRAIG J. JOCHUM, P.E.
Date 8/7/20 Lic. No. 23461

DESIGNED BY: CJJ
DRAWN BY: SGJ
CHECKED BY: TAE

Hakanson Anderson
Civil Engineers and Land Surveyors
3601 Thurston Ave., Anoka, Minnesota 55303
763-427-5860 FAX 763-427-0520
www.hakanson-anderson.com

STATE PROJ. NO 0208-166 (TH65=005)
SAP 203-127-001, SAP 203-111-005,
SAP 203-113-003

EROSION CONTROL PLANS

VIKING BOULEVARD
TH 65 EAST SERVICE ROAD PROJECT

EB351

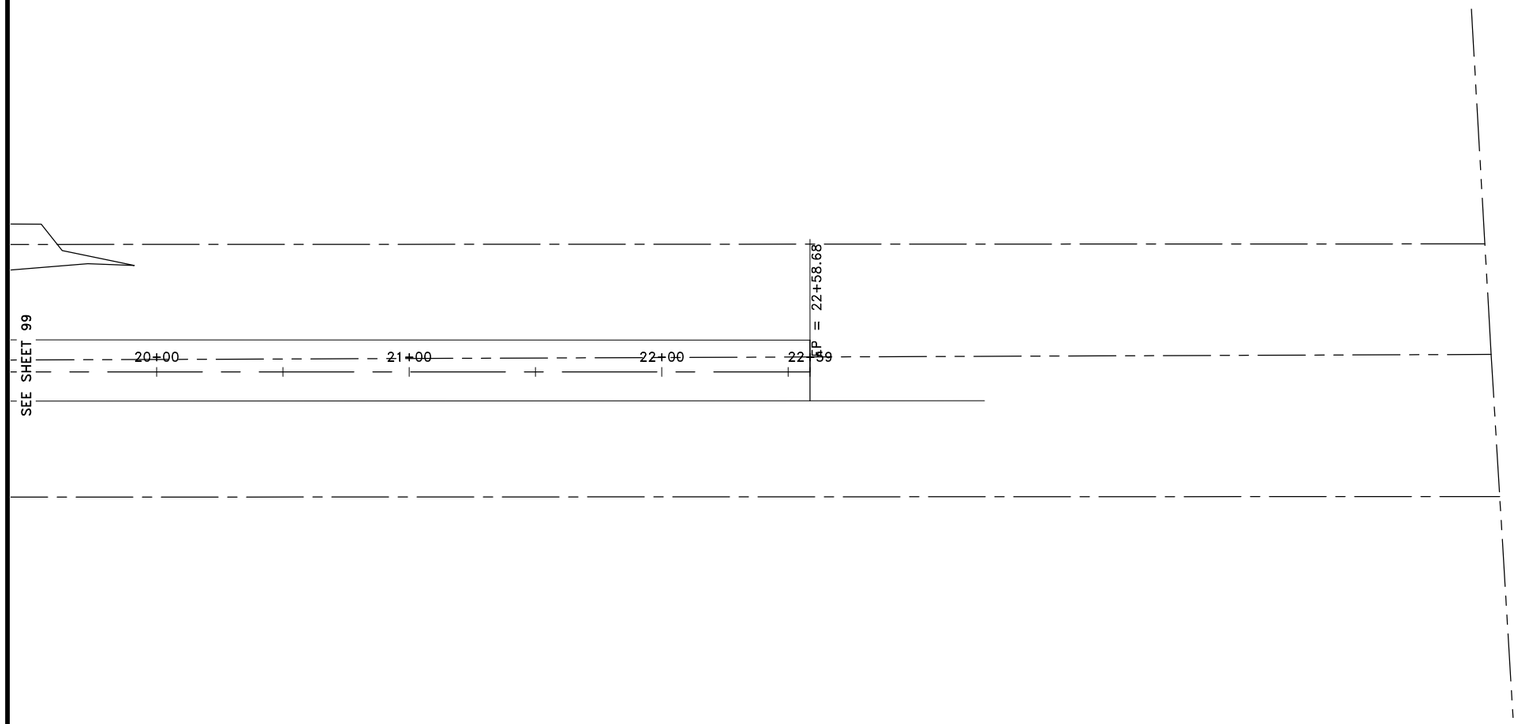

LEGEND

PROPOSED CATEGORY 3 EROSION CONTROL BLANKET, SEED MIXTURE 25-121 ①

SILT FENCE

GENERAL NOTES:

1 ALL WORK WITHIN THE ANOKA COUNTY HIGHWAY DEPARTMENT RIGHT OF WAY SHALL BE IN ACCORDANCE WITH THE 2018 MN/DOT STANDARD SPECIFICATIONS FOR CONSTRUCTION.
2 SEE SHEETS 53-56 FOR REMOVALS.
3 SEE SHEETS 74-76 FOR CONSTRUCTION.
4 SEE SHEETS 106-107 FOR SIGNING AND STRIPING.
5 SEE SHEETS 108-109 FOR TRAFFIC CONTROL.
6 SEE SHEETS X1-X3 FOR CROSS-SECTIONS.
7 ALL DISTURBED AREAS REQUIRE 4" OF SALVAGED TOPSOIL, SEED, FERTILIZER AND CATEGORY 3 EROSION CONTROL BLANKET. TURF ESTABLISHMENT SHALL CONFORM TO MN/DOT STANDARD SPECIFICATIONS.
8 SEE SHEET 6 FOR APPLICATION RATES FOR SEED AND FERTILIZER.

REFERENCE NOTES:

① CATEGORY 3 EROSION CONTROL BLANKET SHALL BE WOOD FIBER WITH NATURAL NETTING MEETING THE REQUIRMENTS OF MN/DOT SPEC. 3885.

N

30 0 30 60
SCALE IN FEET

DATE	REVISION

I hereby certify that this plan, specification, or report was prepared by me or under my direct supervision and that I am a duly Licensed Professional Engineer under the laws of the State of Minnesota.

CRAIG J. JOCHUM, P.E.
Date 8/7/20 Lic. No. 23461

DESIGNED BY: CJJ
DRAWN BY: SGJ
CHECKED BY: TAE

Hakanson Anderson
Civil Engineers and Land Surveyors
3601 Thurston Ave., Anoka, Minnesota 55303
763-427-5860 FAX 763-427-0520
www.hakanson-anderson.com

STATE PROJ. NO 0208-166 (TH65=005)
SAP 203-127-001, SAP 203-111-005,
SAP 203-113-003

EROSION CONTROL PLANS

VIKING BOULEVARD
TH 65 EAST SERVICE ROAD PROJECT

EB351

Aug 19, 2020 - 1:19pm
K:\MUNICIPAL\EB351\ENGINEERING\EB351_EROSION CONTROL_1.dwg

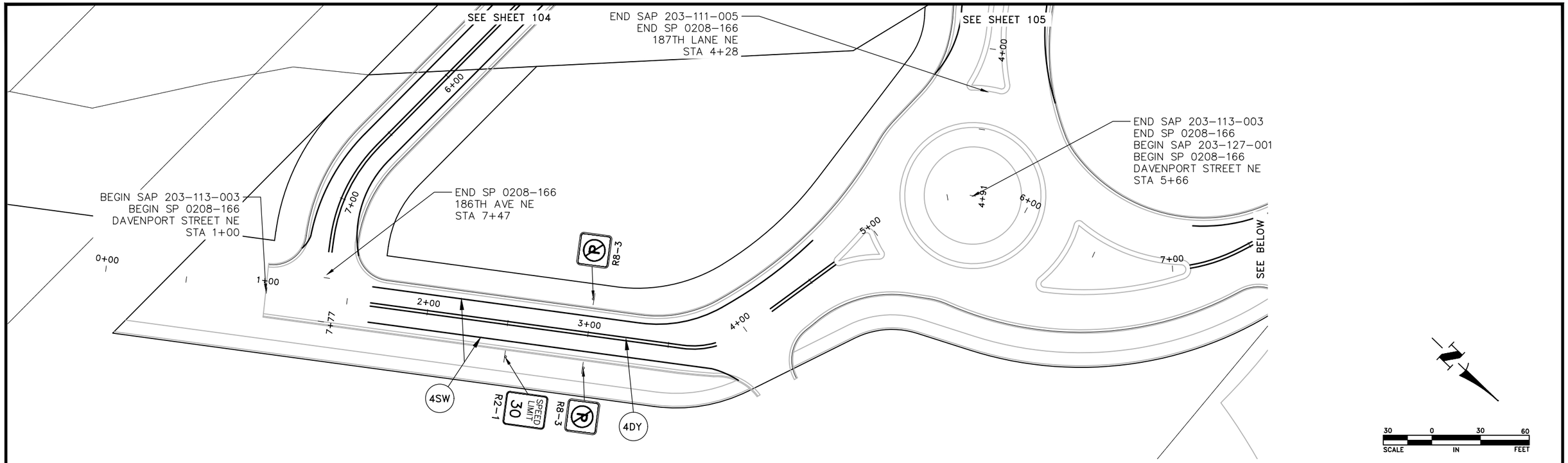

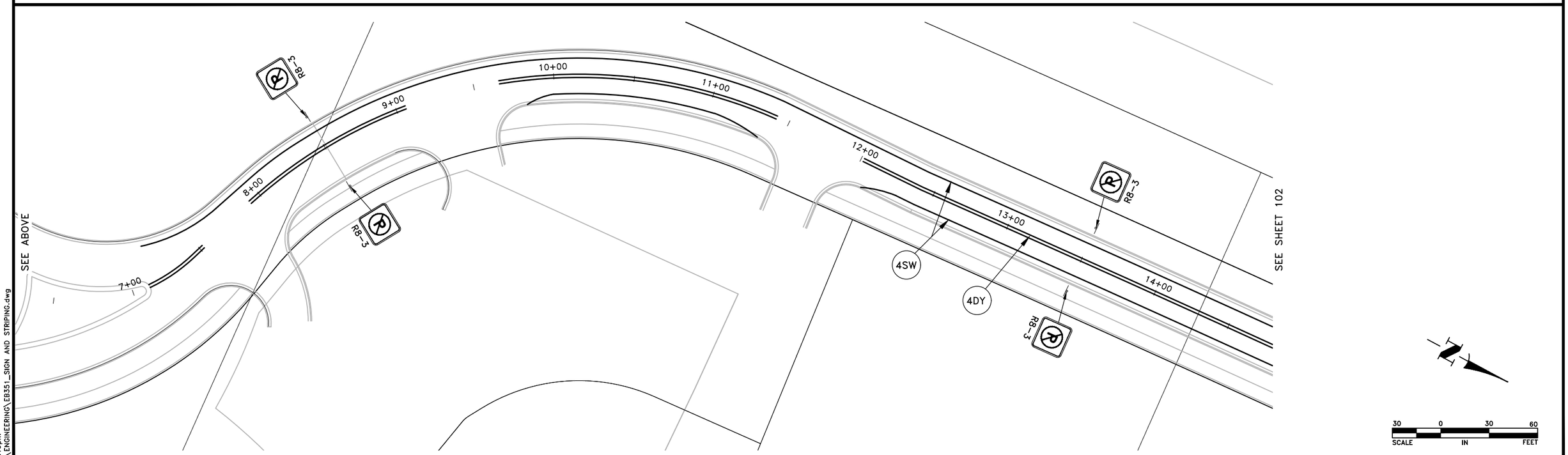

DATE	REVISION

I hereby certify that this plan, specification, or report was prepared by me or under my direct supervision and that I am a duly Licensed Professional Engineer under the laws of the State of Minnesota.

CRAIG J. JOCHUM, P.E.
Date 8/7/20 Lic. No. 23461

DESIGNED BY: CJJ
DRAWN BY: SGJ
CHECKED BY: TAE

Hakanson Anderson
Civil Engineers and Land Surveyors
3601 Thurston Ave., Anoka, Minnesota 55303
763-427-5860 FAX 763-427-0520
www.hakanson-anderson.com

STATE PROJ. NO 0208-166 (TH65=005)
SAP 203-127-001, SAP 203-111-005,
SAP 203-113-003

SIGNING AND STRIPING

DAVENPORT STREET NE
TH 65 EAST SERVICE ROAD PROJECT

EB351

Aug 19, 2020 – 1:19pm
K:\MUNICIPAL\EB351\ENGINEERING\EB351_SIGN AND STRIPING.dwg

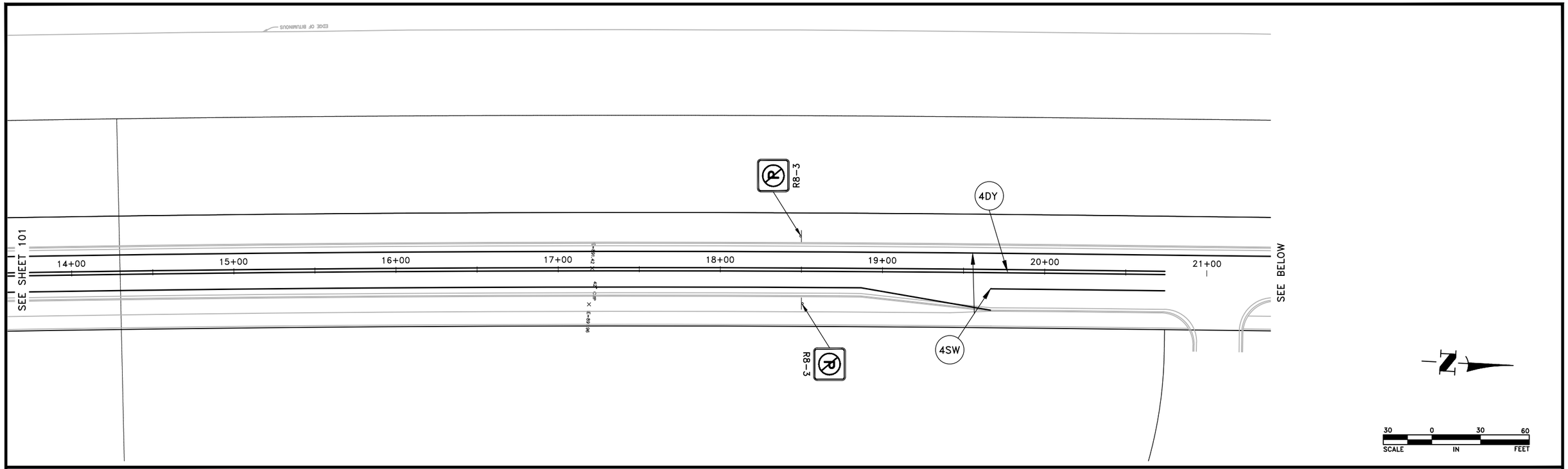

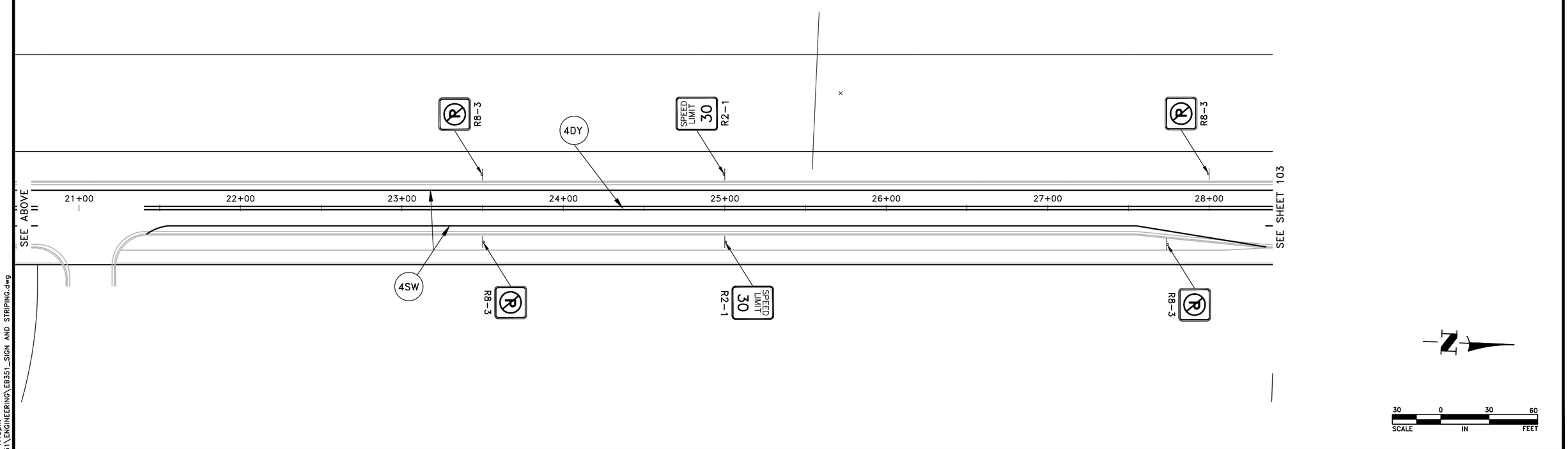

DATE	REVISION

I hereby certify that this plan, specification, or report was prepared by me or under my direct supervision and that I am a duly Licensed Professional Engineer under the laws of the State of Minnesota.

CRAIG J. JOCHUM, P.E.
Date 8/7/20 Lic. No. 23461

DESIGNED BY: CJJ
DRAWN BY: SGJ
CHECKED BY: TAE

Hakanson Anderson
Civil Engineers and Land Surveyors
3601 Thurston Ave., Anoka, Minnesota 55303
763-427-5860 FAX 763-427-0520
www.hakanson-anderson.com

STATE PROJ. NO 0208-166 (TH65=005)
SAP 203-127-001, SAP 203-111-005,
SAP 203-113-003

SIGNING AND STRIPING

DAVENPORT STREET NE
TH 65 EAST SERVICE ROAD PROJECT

SHEET 102 OF 109 SHEETS

EB351

Aug 19, 2020 - 1:19pm
K:\MUNICIPAL\EB351\ENGINEERING\EB351_SIGN AND STRIPING.dwg

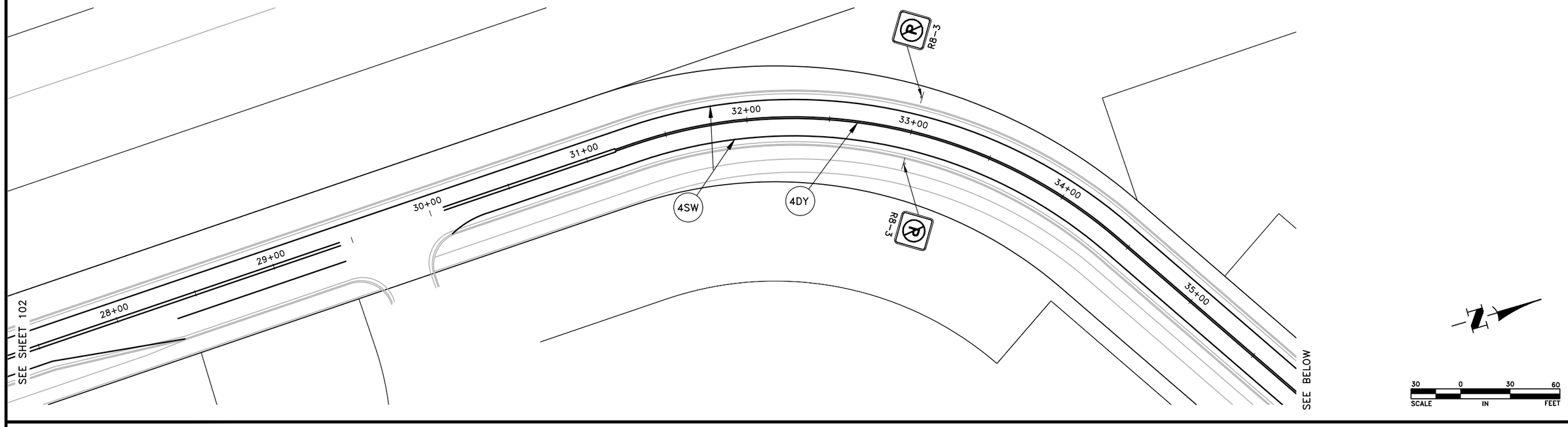

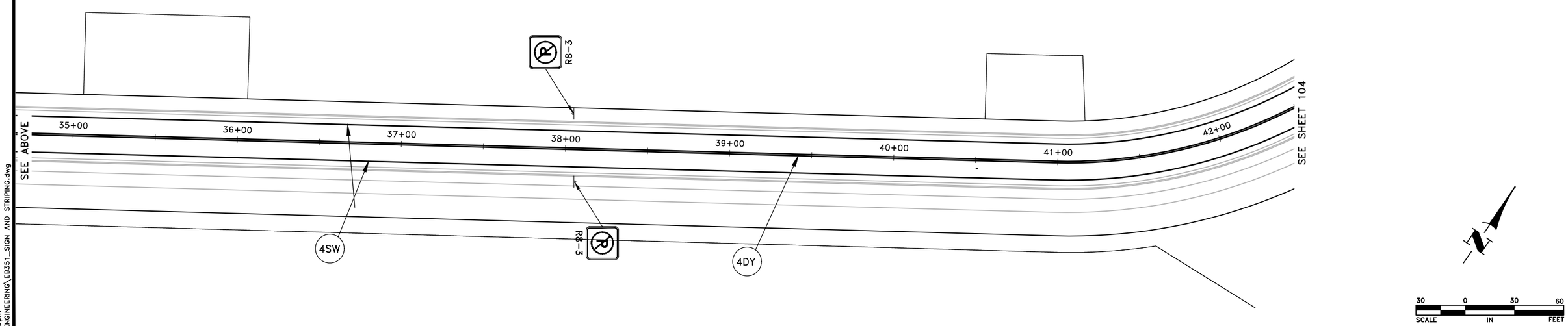

DATE	REVISION

I hereby certify that this plan, specification, or report was prepared by me or under my direct supervision and that I am a duly Licensed Professional Engineer under the laws of the State of Minnesota.

CRAIG J. JOCHUM, P.E.
Date 8/7/20 Lic. No. 23461

DESIGNED BY: CJJ
DRAWN BY: SGJ
CHECKED BY: TAE

Hakanson Anderson
Civil Engineers and Land Surveyors
3601 Thurston Ave., Anoka, Minnesota 55303
763-427-5860 FAX 763-427-0520
www.hakanson-anderson.com

STATE PROJ. NO 0208-166 (TH65=005)
SAP 203-127-001, SAP 203-111-005,
SAP 203-113-003

SIGNING AND STRIPING

DAVENPORT STREET NE
TH 65 EAST SERVICE ROAD PROJECT

SHEET 103 OF 109 SHEETS

EB351

Aug 19, 2020 - 1:19pm
K:\MUNICIPAL\EB351\ENGINEERING\EB351_SIGN AND STRIPING.dwg

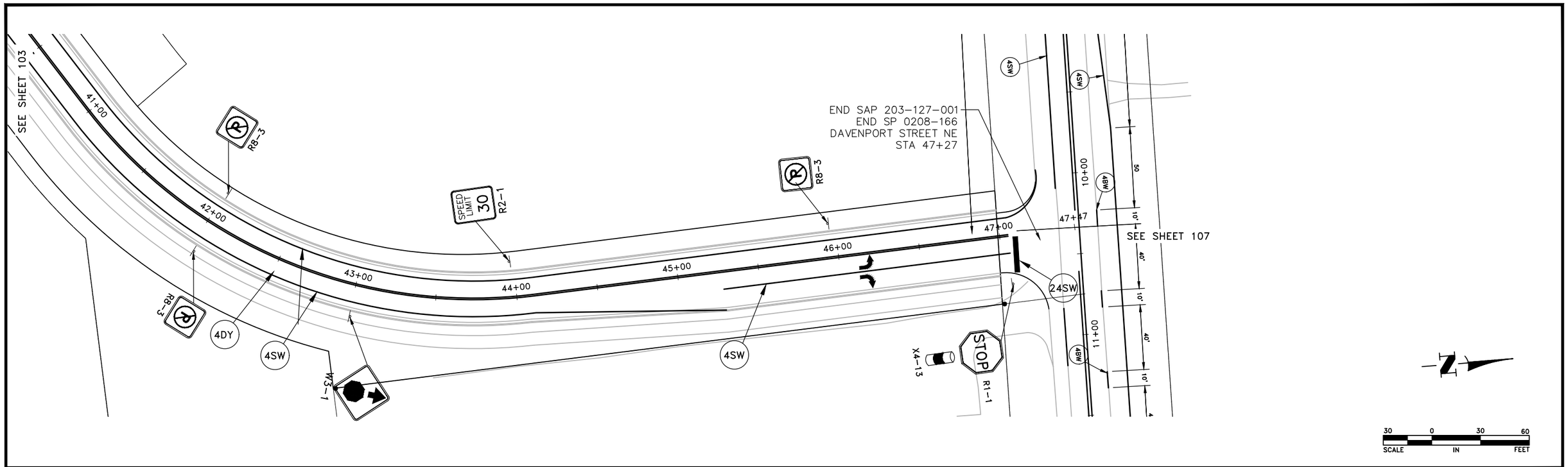

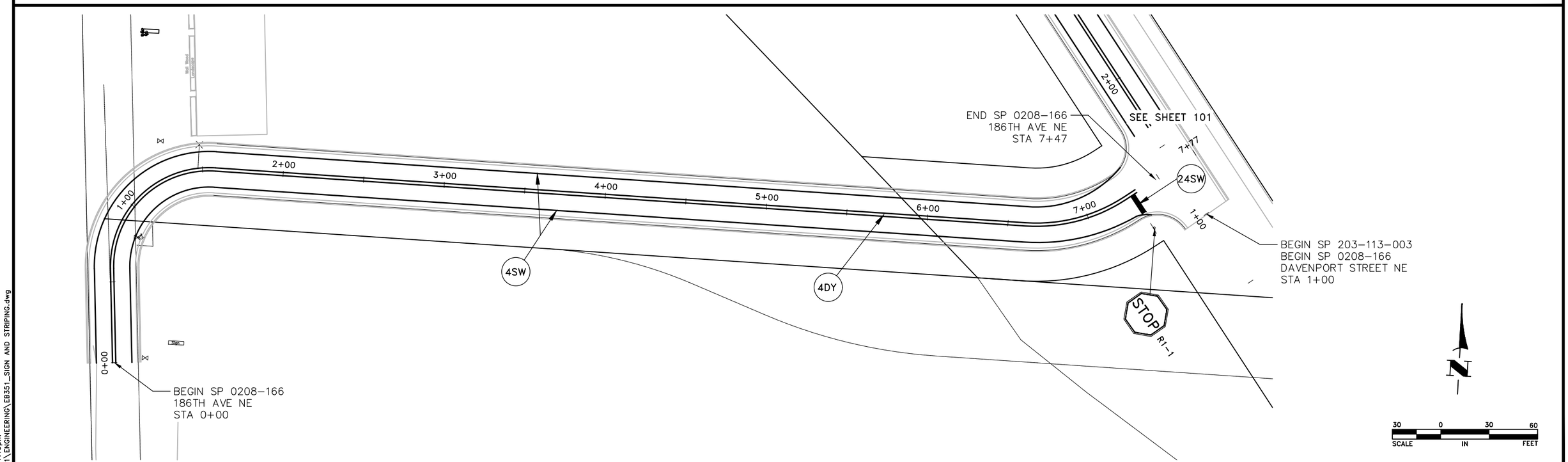

DATE	REVISION

I hereby certify that this plan, specification, or report was prepared by me or under my direct supervision and that I am a duly Licensed Professional Engineer under the laws of the State of Minnesota.

CRAIG J. JOCHUM, P.E.
Date 8/7/20 Lic. No. 23461

DESIGNED BY: CJJ
DRAWN BY: SGJ
CHECKED BY: TAE

Hakanson Anderson
Civil Engineers and Land Surveyors
3601 Thurston Ave., Anoka, Minnesota 55303
763-427-5860 FAX 763-427-0520
www.hakanson-anderson.com

STATE PROJ. NO 0208-166 (TH65=005)
SAP 203-127-001, SAP 203-111-005,
SAP 203-113-003

SIGNING AND STRIPING

DAVENPORT STREET NE AND 186TH AVE
TH 65 EAST SERVICE ROAD PROJECT

Aug 19, 2020 - 1:19pm
K:\MUNICIPAL\EB351\ENGINEERING\EB351_SIGN AND STRIPING.dwg

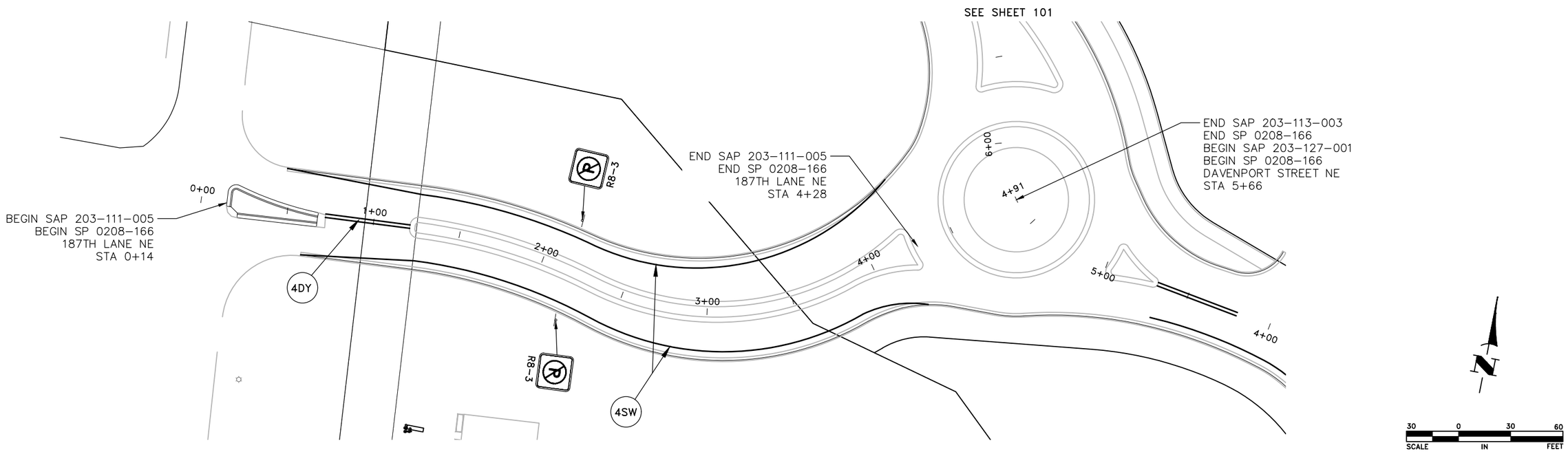

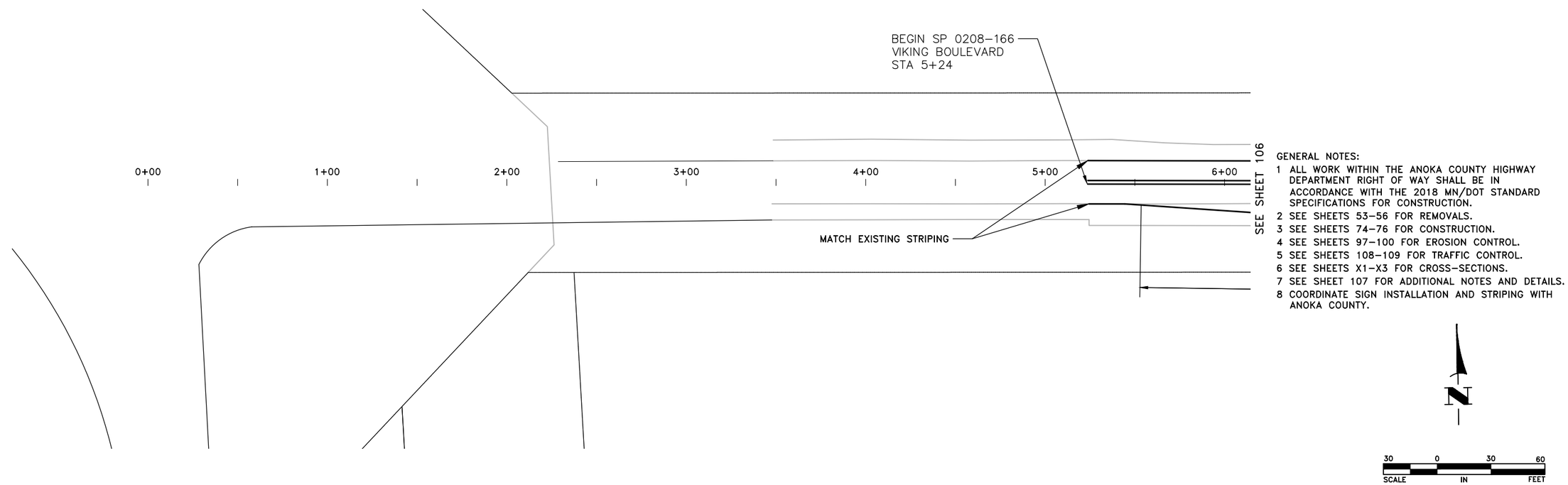

GENERAL NOTES:

1 ALL WORK WITHIN THE ANOKA COUNTY HIGHWAY DEPARTMENT RIGHT OF WAY SHALL BE IN ACCORDANCE WITH THE 2018 MN/DOT STANDARD SPECIFICATIONS FOR CONSTRUCTION.
2 SEE SHEETS 53–56 FOR REMOVALS.
3 SEE SHEETS 74–76 FOR CONSTRUCTION.
4 SEE SHEETS 97–100 FOR EROSION CONTROL.
5 SEE SHEETS 108–109 FOR TRAFFIC CONTROL.
6 SEE SHEETS X1–X3 FOR CROSS-SECTIONS.
7 SEE SHEET 107 FOR ADDITIONAL NOTES AND DETAILS.
8 COORDINATE SIGN INSTALLATION AND STRIPING WITH ANOKA COUNTY.

DATE	REVISION

I hereby certify that this plan, specification, or report was prepared by me or under my direct supervision and that I am a duly Licensed Professional Engineer under the laws of the State of Minnesota.

CRAIG J. JOCHUM, P.E.
Date 8/7/20 Lic. No. 23461

DESIGNED BY: CJJ
DRAWN BY: SGJ
CHECKED BY: TAE

Hakanson Anderson
Civil Engineers and Land Surveyors
3601 Thurston Ave., Anoka, Minnesota 55303
763-427-5860 FAX 763-427-0520
www.hakanson-anderson.com

STATE PROJ. NO 0208-166 (TH65=005)
SAP 203-127-001, SAP 203-111-005,
SAP 203-113-003

SIGNING AND STRIPING

187TH LANE NE AND VIKING BOULEVARD
TH 65 EAST SERVICE ROAD PROJECT

Aug 19, 2020 – 1:19pm
K:\MUNICIPAL\EB351\ENGINEERING\EB351_SIGN AND STRIPING.dwg

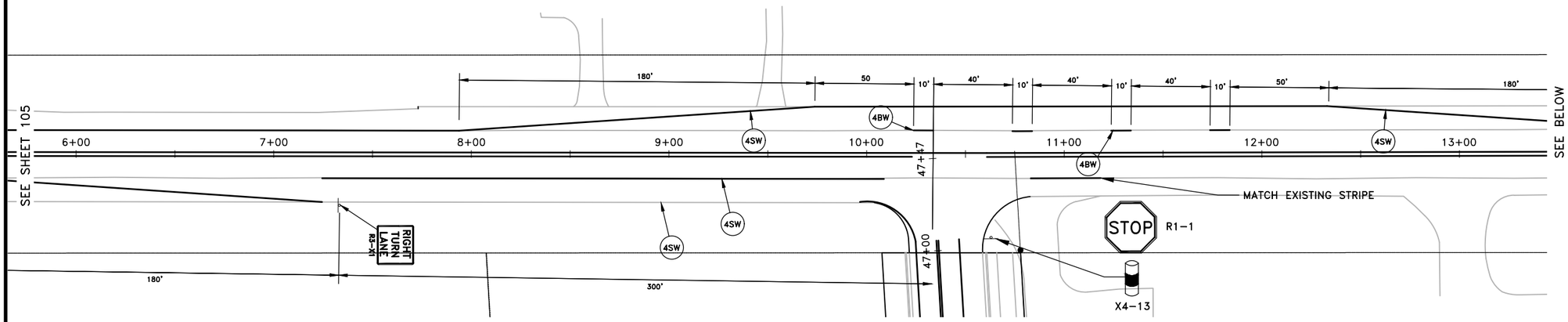

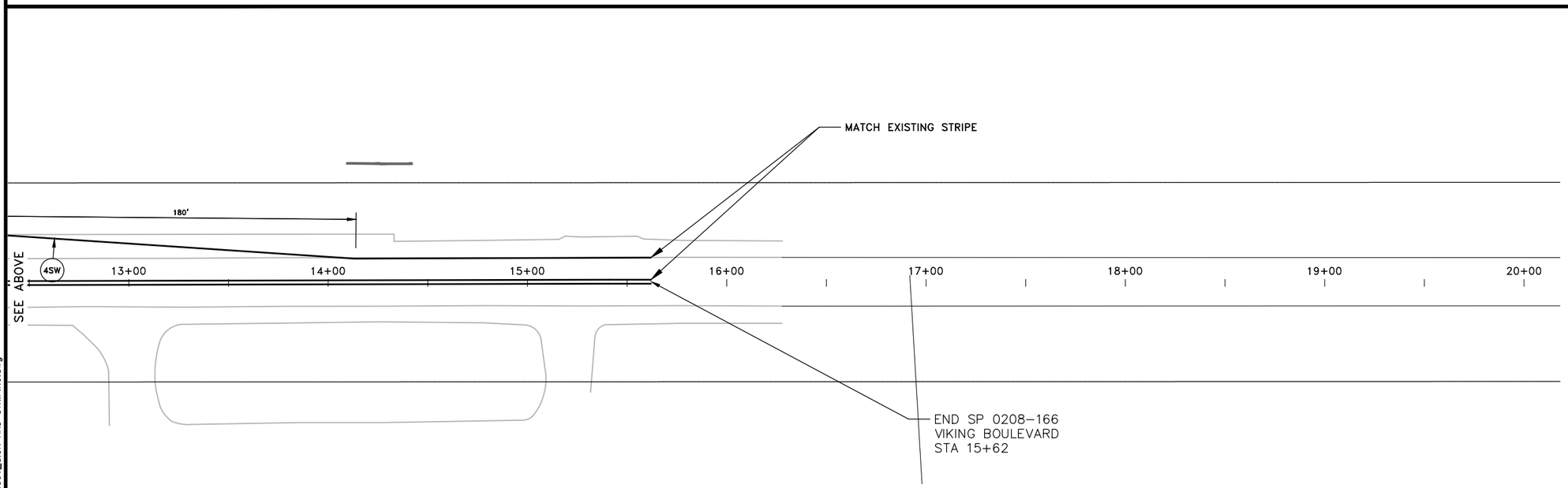

GENERAL NOTES:

1 ALL WORK WITHIN THE ANOKA COUNTY HIGHWAY DEPARTMENT RIGHT OF WAY SHALL BE IN ACCORDANCE WITH THE 2018 MN/DOT STANDARD SPECIFICATIONS FOR CONSTRUCTION.
2 SEE SHEETS 53–56 FOR REMOVALS.
3 SEE SHEETS 74–76 FOR CONSTRUCTION.
4 SEE SHEETS 97–100 FOR EROSION CONTROL.
5 SEE SHEETS 108–109 FOR TRAFFIC CONTROL.
6 SEE SHEETS X1–X3 FOR CROSS–SECTIONS.
7 SEE SHEET 107 FOR ADDITIONAL NOTES AND DETAILS.
8 COORDINATE SIGN INSTALLATION AND STRIPING WITH ANOKA COUNTY.

30 0 30 60
SCALE IN FEET

DATE	REVISION

I hereby certify that this plan, specification, or report was prepared by me or under my direct supervision and that I am a duly Licensed Professional Engineer under the laws of the State of Minnesota.

CRAIG J. JOCHUM, P.E.
Date 8/7/20 Lic. No. 23461

DESIGNED BY: CJJ
DRAWN BY: SGJ
CHECKED BY: TAE

Hakanson Anderson
Civil Engineers and Land Surveyors
3601 Thurston Ave., Anoka, Minnesota 55303
763-427-5860 FAX 763-427-0520
www.hakanson-anderson.com

STATE PROJ. NO 0208-166 (TH65=005)
SAP 203-127-001, SAP 203-111-005,
SAP 203-113-003

SIGNING AND STRIPING

VIKING BOULEVARD
TH 65 EAST SERVICE ROAD PROJECT

Aug 19, 2020 – 1:19pm
K:\MUNICIPAL\EB351\ENGINEERING\EB351_SIGN AND STRIPING.dwg

PERMANENT PAVEMENT MARKING GENERAL NOTES AND GUIDELINES:

1. THE ENGINEER'S INVOLVEMENT IN THE APPLICATION OF THE MATERIAL SHALL BE LIMITED TO FIELD CONSULTATION AND INSPECTION. THE CONTRACTOR WILL PLACE NECESSARY "SPOTTING" AT APPROPRIATE POINTS TO PROVIDE HORIZONTAL CONTROL FOR STRIPING AND TO DETERMINE NECESSARY STARTING AND CUTOFF POINTS. LONGITUDINAL JOINTS, PAVEMENT EDGES AND EXISTING MARKINGS MAY SERVE AS HORIZONTAL CONTROL WHEN SO DIRECTED.
2. EDGE LINES AND LANE LINES ARE TO BE BROKEN ONLY AT INTERSECTIONS WITH PUBLIC ROADS AND AT PRIVATE ENTRANCES IF THEY ARE CONTROLLED BY A YIELD SIGN, STOP SIGN OR TRAFFIC SIGNAL. THE BREAK POINT IS TO BE AT THE START OF THE RADIUS FOR THE INTERSECTION OR AT MARKED STOP LINES OR CROSSWALKS.
3. A TOLERANCE OF 1/4 INCH UNDER OR 1/4 OVER THE SPECIFIED WIDTH WILL BE ALLOWED FOR STRIPING PROVIDED THE VARIATION IS GRADUAL AND DOES NOT DETRACT FROM THE GENERAL APPEARANCE. BROKEN LINE SEGMENTS MAY VARY UP TO ONE-HALF FOOT FROM THE SPECIFIED LENGTHS PROVIDED THE OVER AND UNDER VARIATIONS ARE REASONABLY COMPENSATORY. ALIGNMENT DEVIATIONS FROM THE CONTROL GUIDE SHALL NOT EXCEED 1 INCH. MATERIAL SHALL NOT BE APPLIED OVER LONGITUDINAL JOINTS. ESTABLISHMENT OF APPLICATION TOLERANCES SHALL NOT RELIEVE THE CONTRACTOR OF THEIR RESPONSIBILITY TO COMPLY AS CLOSELY AS PRACTICABLE WITH THE PLANNED DIMENSIONS.
4. THE ROAD SURFACE SHALL BE CLEANED AT THE DIRECTION OF THE ENGINEER JUST PRIOR TO APPLICATION. PAVEMENT CLEANING SHALL CONSIST OF AT LEAST BRUSHING WITH A ROTARY BROOM (NON-METALLIC) OR AS RECOMMENDED BY THE MATERIAL MANUFACTURER AND ACCEPTABLE TO THE ENGINEER. THIS WORK SHALL BE INCIDENTAL.
5. THE MULTI-COMPONENT MARKING APPLICATION SHALL IMMEDIATELY FOLLOW THE PAVEMENT CLEANING. GLASS BEADS SHALL BE APPLIED IMMEDIATELY AFTER APPLICATION OF THE MULTI-COMPONENT RESIN LINE TO PROVIDE AN IMMEDIATE NO-TRACK SYSTEM.
6. FOR 20 MIL APPLICATIONS, GLASS BEADS SHALL BE APPLIED AT A RATE OF AT LEAST 25 LB/GAL. THE "NO-TRACKING" CONDITION SHALL BE DETERMINED ON AN APPLICATION OF SPECIFIED THICKNESS TO THE PAVEMENT AND COVERED WITH GLASS BEADS AT THE RATE OF AT LEAST 25 LB/GAL.
7. OPERATIONS SHALL BE CONDUCTED ONLY WHEN THE ROAD PAVEMENT SURFACE TEMPERATURES ARE 50 DEGREES (°F) OR GREATER.
8. PERMANENT PAVEMENT MARKINGS SHALL NOT BE PLACED OVER TEMPORARY TAPE MARKINGS.

STRIPING KEY

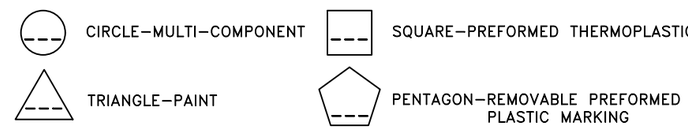

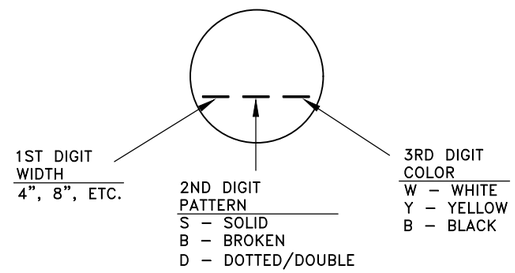

EXAMPLE: (4SW) = 4" SOLID LINE WHITE-MULTI-COMPONENT

DATE	REVISION

I hereby certify that this plan, specification, or report was prepared by me or under my direct supervision and that I am a duly Licensed Professional Engineer under the laws of the State of Minnesota.

CRAIG J. JOCHUM, P.E.
Date 8/7/20 Lic. No. 23461

DESIGNED BY: CJJ
DRAWN BY: SGJ
CHECKED BY: TAE

Hakanson Anderson
Civil Engineers and Land Surveyors
3601 Thurston Ave., Anoka, Minnesota 55303
763-427-5860 FAX 763-427-0520
www.hakanson-anderson.com

STATE PROJ. NO 0208-166 (TH65=005)
SAP 203-127-001, SAP 203-111-005,
SAP 203-113-003

STRIPING DETAILS AND KEY

DAVENPORT STREET NE
TH 65 EAST SERVICE ROAD PROJECT

EB351

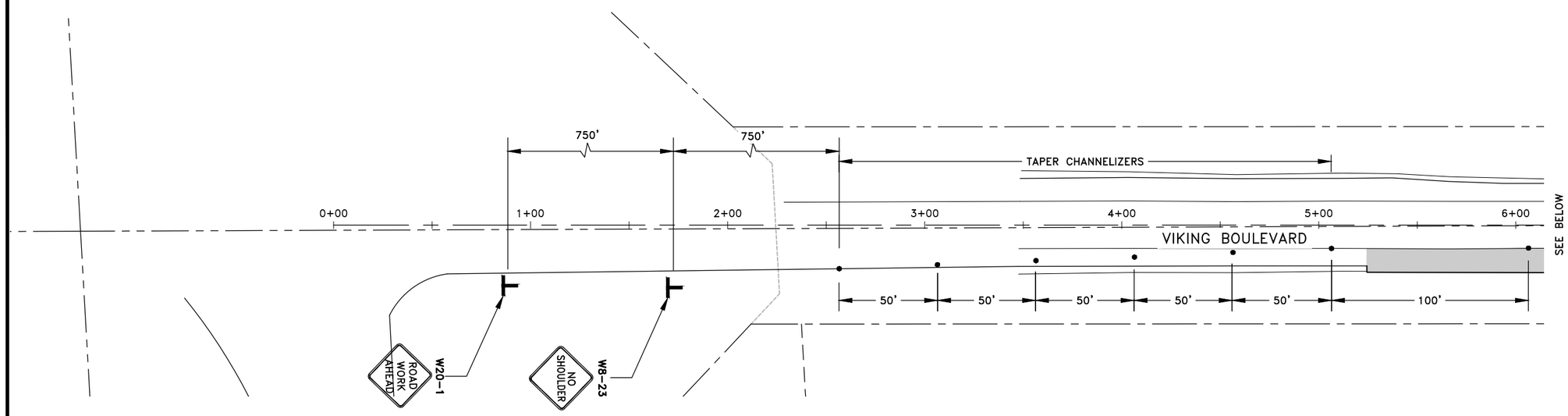

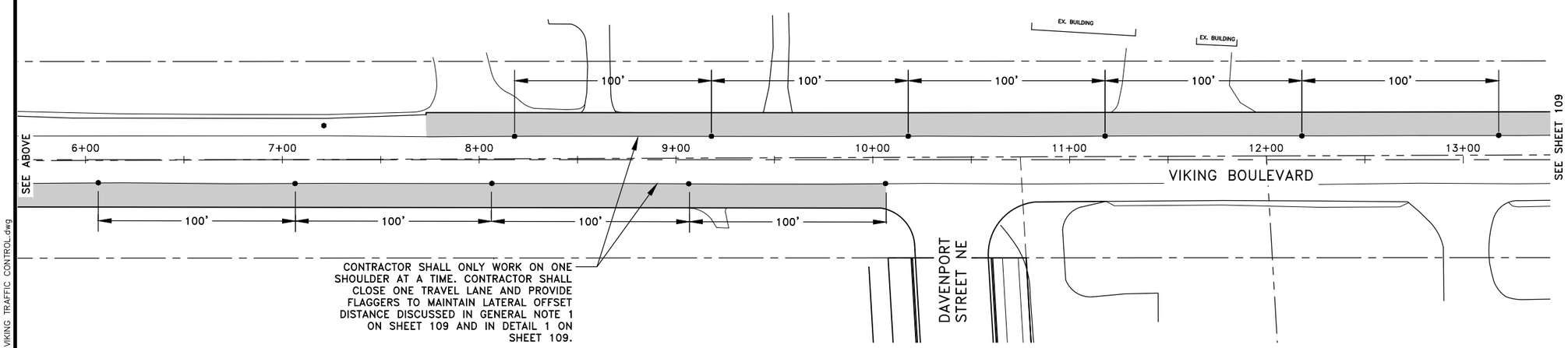

GENERAL NOTES:

1 ALL WORK WITHIN THE ANOKA COUNTY HIGHWAY DEPARTMENT RIGHT OF WAY SHALL BE IN ACCORDANCE WITH THE 2018 MN/DOT STANDARD SPECIFICATIONS FOR CONSTRUCTION.
2 SEE SHEETS 53–56 FOR REMOVALS.
3 SEE SHEETS 74–76 FOR CONSTRUCTION.
4 SEE SHEETS 97–100 FOR EROSION CONTROL.
5 SEE SHEETS 106–107 FOR SIGN AND STRIPING.
6 SEE SHEETS X1–X3 FOR CROSS-SECTIONS.

LEGEND

- ● TYPE B CHANNELIZER (DRUM)
- WORK ZONE

N

30 0 30 60
SCALE IN FEET

DATE	REVISION

I hereby certify that this plan, specification, or report was prepared by me or under my direct supervision and that I am a duly Licensed Professional Engineer under the laws of the State of Minnesota.

CRAIG J. JOCHUM, P.E.
Date 8/7/20 Lic. No. 23461

DESIGNED BY: CJJ
DRAWN BY: SGJ
CHECKED BY: TAE

Hakanson Anderson
Civil Engineers and Land Surveyors
3601 Thurston Ave., Anoka, Minnesota 55303
763-427-5860 FAX 763-427-0520
www.hakanson-anderson.com

STATE PROJ. NO 0208-166 (TH65=005)
SAP 203-127-001, SAP 203-111-005,
SAP 203-113-003

TRAFFIC CONTROL PLAN

VIKING BOULEVARD
TH 65 EAST SERVICE ROAD PROJECT

EB351

Aug 19, 2020 – 1:20pm
K:\MUNICIPAL\EB351\ENGINEERING\EB351 VIKING TRAFFIC CONTROL.dwg

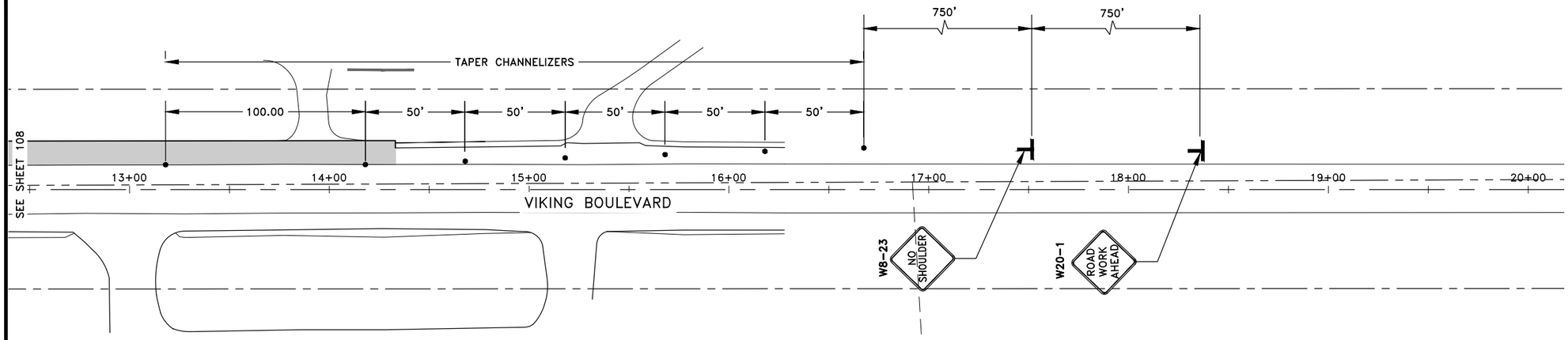

LEGEND

- ● TYPE B CHANNELIZER (DRUM)
- WORK ZONE

GENERAL NOTES:

1. EXCEPT AS MODIFIED BY THIS PLAN, TRAFFIC CONTROL SHALL BE IN ACCORDANCE WITH LAYOUT 8 OF THE TEMPORARY TRAFFIC CONTROL ZONE LAYOUTS FIELD MANUAL. CONTRACTOR SHALL ALSO PROVIDE SIGNS PER FIGURE 6K-7 OF MINNESOTA TEMPORARY TRAFFIC CONTROL FIELD MANUAL FOR LONGITUDINAL DROP-OFF. NO DROP-OFF WILL BE ALLOWED TO REMAIN OVER NIGHT. WHEN CONTRACTOR IS PERFORMING WORK ON THE RIGHT TURN LANE OR BYPASS LANE, THE CONTRACTOR SHALL CLOSE THE ADJACENT THROUGH LANE AND PROVIDE TWO FLAGGERS PER LAYOUT 16. CLOSURES ARE ONLY ALLOWED BETWEEN THE HOURS OF 9:00 A.M. AND 3:00 P.M. PRIOR TO REMOVING FLAGGERS, THE CONTRACTOR SHALL PROVIDE A 1:4 TAPER CONSTRUCTED OF COMPACTED CLASS 5 AGGREGATE BASE AT ALL DROP-OFFS. SEE DETAIL 1 ON THIS SHEET FOR ADDITIONAL INFORMATION.
2. TEMPORARY SIGNS AND CHANNELIZERS SHALL BE PAID PER ITEM 2563-TRAFFIC CONTROL.
3. ALL TRAFFIC CONTROL FOR HANSON BOULEVARD SHALL BE PERMITTED THROUGH THE ANOKA COUNTY HIGHWAY DEPARTMENT. CONTRACTOR SHALL SUBMIT THE REQUIRED PERMIT APPLICATION MATERIALS TO THE ANOKA COUNTY HIGHWAY DEPARTMENT A MINIMUM OF TWO WEEKS PRIOR TO WORKING IN THE COUNTY RIGHT-OF-WAY.

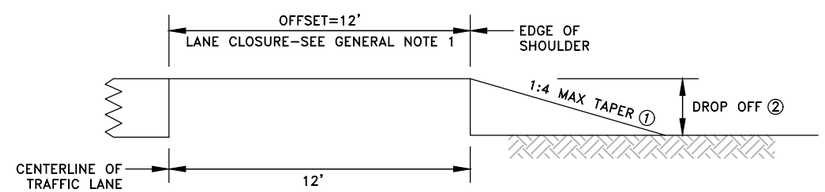

REFERENCE NOTES:

① CONSTRUCT TAPER PRIOR TO OPENING THE TRAVEL LANE WHICH IS ADJACENT TO THE SHOULDER BEING WORKED ON.

② WHEN THE ADJACENT LANE IS CLOSED, THE MAXIMUM ALLOWABLE DROP OFF SHALL BE 36 INCHES. WHEN THE ADJACENT LANE IS REOPENED, THE MAXIMUM DROP OFF SHALL BE 12 INCHES.

1 / 109 DROP OFF DETAIL

NO SCALE

GENERAL NOTES:

1 ALL WORK WITHIN THE ANOKA COUNTY HIGHWAY DEPARTMENT RIGHT OF WAY SHALL BE IN ACCORDANCE WITH THE 2018 MN/DOT STANDARD SPECIFICATIONS FOR CONSTRUCTION.
2 SEE SHEETS 53-56 FOR REMOVALS.
3 SEE SHEETS 74-76 FOR CONSTRUCTION.
4 SEE SHEETS 97-100 FOR EROSION CONTROL.
5 SEE SHEETS 106-107 FOR SIGN AND STRIPING.
6 SEE SHEETS X1-X3 FOR CROSS-SECTIONS.

N

30 0 30 60
SCALE IN FEET

DATE	REVISION

I hereby certify that this plan, specification, or report was prepared by me or under my direct supervision and that I am a duly Licensed Professional Engineer under the laws of the State of Minnesota.

CRAIG J. JOCHUM, P.E.
Date 8/7/20 Lic. No. 23461

DESIGNED BY: CJJ
DRAWN BY: SGJ
CHECKED BY: TAE

Hakanson Anderson
Civil Engineers and Land Surveyors
3601 Thurston Ave., Anoka, Minnesota 55303
763-427-5860 FAX 763-427-0520
www.hakanson-anderson.com

STATE PROJ. NO 0208-166 (TH65=005)
SAP 203-127-001, SAP 203-111-005,
SAP 203-113-003

TRAFFIC CONTROL PLAN

VIKING BOULEVARD
TH 65 EAST SERVICE ROAD PROJECT

SHEET 109 OF 109 SHEETS

EB351

6+50

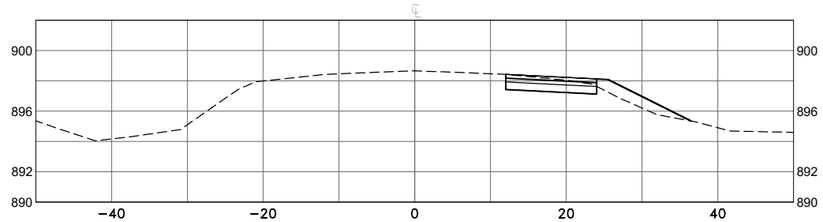

8+50

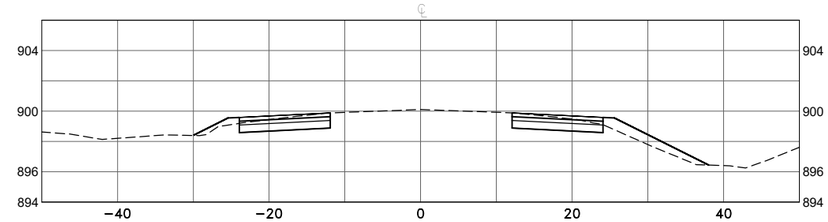

6+00

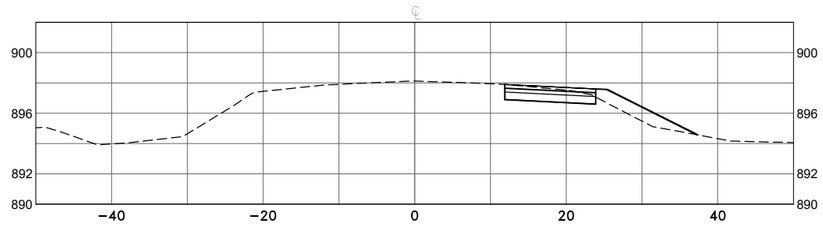

8+00

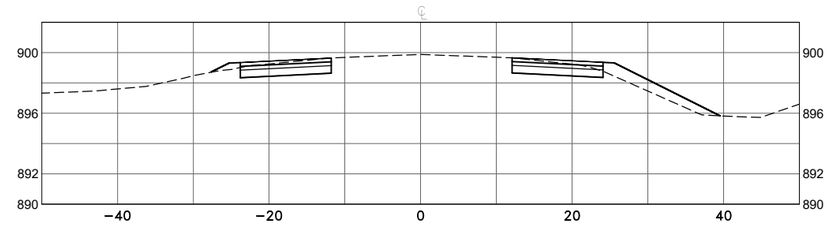

5+50

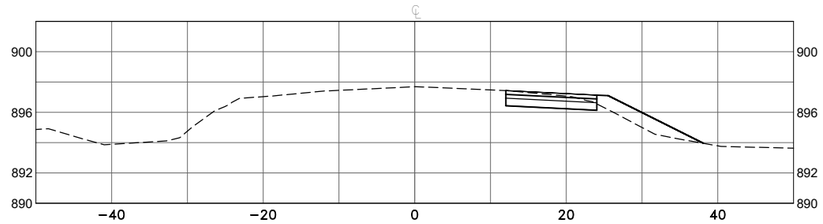

7+50

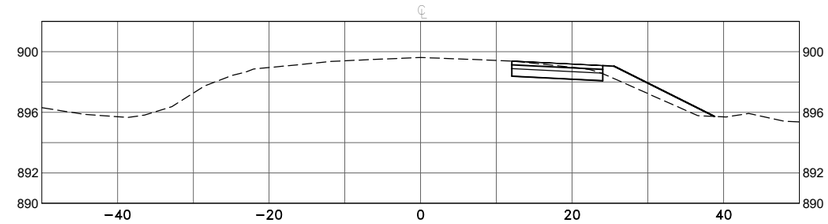

5+00

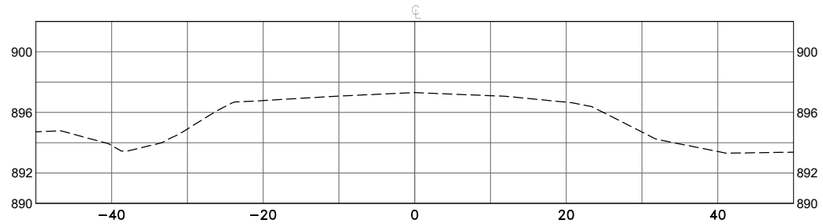

7+00

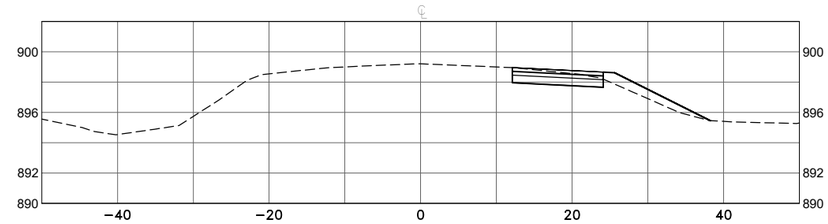

DATE	REVISION

DESIGNED BY: CJJ
DRAWN BY: SGJ
CHECKED BY: TAE

Hakanson Anderson
Civil Engineers and Land Surveyors
3601 Thurston Ave., Anoka, Minnesota 55303
763-427-5860 FAX 763-427-0520
www.hakanson-anderson.com

STATE PROJ. NO 0208-166 (TH65=005)
SAP 203-127-001, SAP 203-111-005,
SAP 203-113-003

CROSS SECTIONS

VIKING BOULEVARD
TH 65 EAST SERVICE ROAD PROJECT

SHEET X1 OF X3 SHEETS

EB351

Aug 19, 2020 – 1:20pm
K:\MUNICIPAL\EB351\ENGINEERING\EB351_BA.dwg

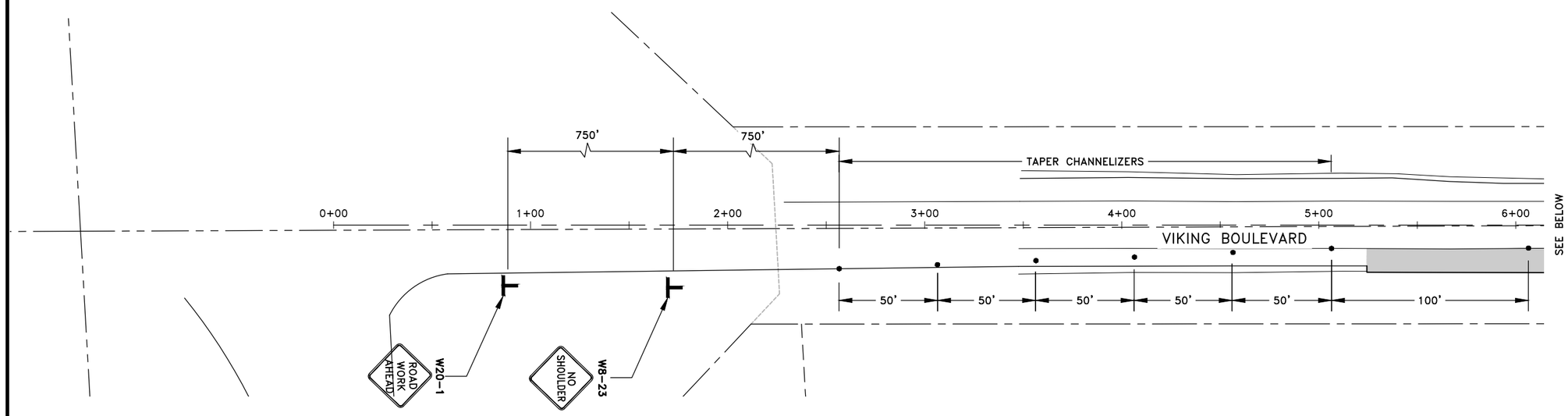

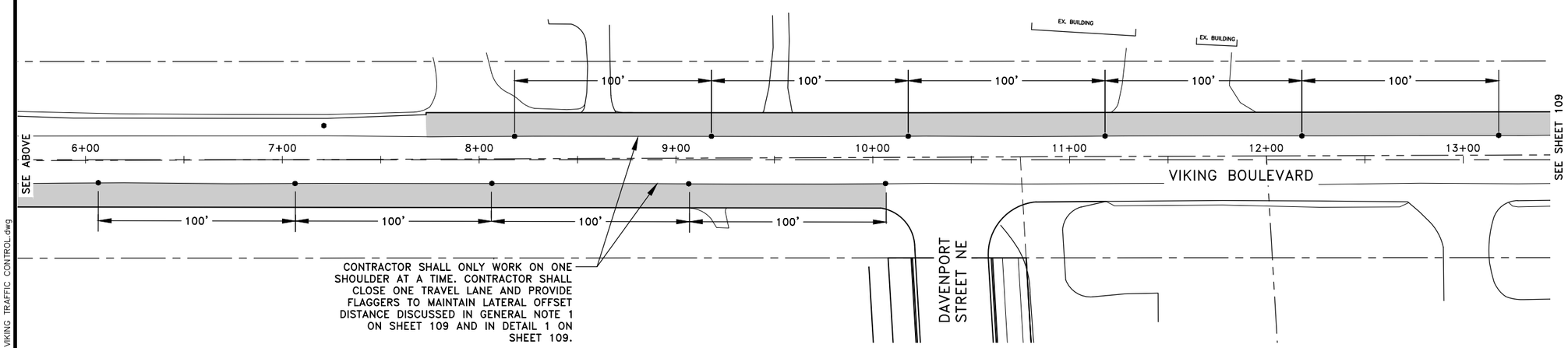

GENERAL NOTES:

1 ALL WORK WITHIN THE ANOKA COUNTY HIGHWAY DEPARTMENT RIGHT OF WAY SHALL BE IN ACCORDANCE WITH THE 2018 MN/DOT STANDARD SPECIFICATIONS FOR CONSTRUCTION.
2 SEE SHEETS 53–56 FOR REMOVALS.
3 SEE SHEETS 74–76 FOR CONSTRUCTION.
4 SEE SHEETS 97–100 FOR EROSION CONTROL.
5 SEE SHEETS 106–107 FOR SIGN AND STRIPING.
6 SEE SHEETS X1–X3 FOR CROSS-SECTIONS.

LEGEND

- ● TYPE B CHANNELIZER (DRUM)
- WORK ZONE

N

30 0 30 60
SCALE IN FEET

DATE	REVISION

I hereby certify that this plan, specification, or report was prepared by me or under my direct supervision and that I am a duly Licensed Professional Engineer under the laws of the State of Minnesota.

CRAIG J. JOCHUM, P.E.
Date 8/7/20 Lic. No. 23461

DESIGNED BY: CJJ
DRAWN BY: SGJ
CHECKED BY: TAE

Hakanson Anderson
Civil Engineers and Land Surveyors
3601 Thurston Ave., Anoka, Minnesota 55303
763-427-5860 FAX 763-427-0520
www.hakanson-anderson.com

STATE PROJ. NO 0208-166 (TH65=005)
SAP 203-127-001, SAP 203-111-005,
SAP 203-113-003

TRAFFIC CONTROL PLAN

VIKING BOULEVARD
TH 65 EAST SERVICE ROAD PROJECT

EB351

Aug 19, 2020 – 1:20pm
K:\MUNICIPAL\EB351\ENGINEERING\EB351 VIKING TRAFFIC CONTROL.dwg

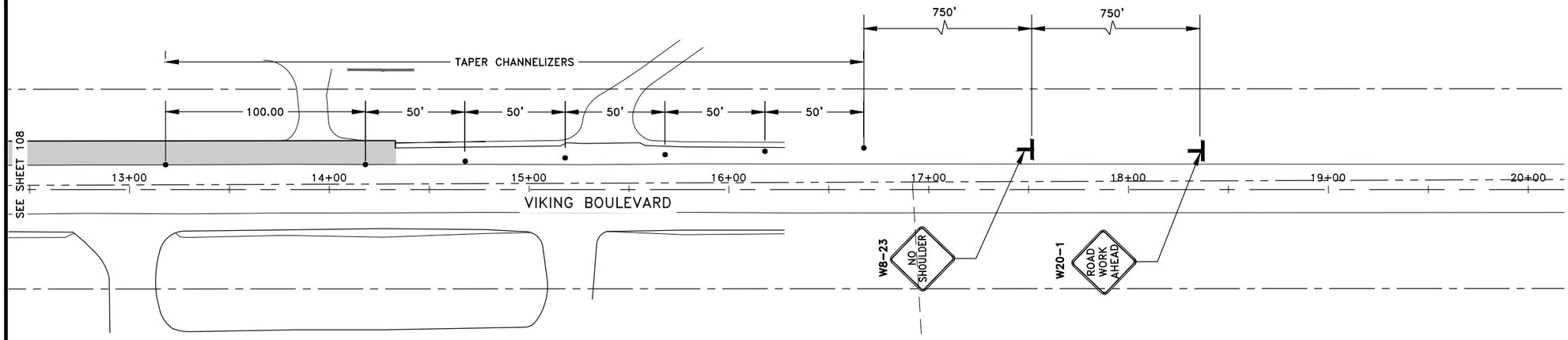

LEGEND

- ● TYPE B CHANNELIZER (DRUM)
- WORK ZONE

GENERAL NOTES:

1. EXCEPT AS MODIFIED BY THIS PLAN, TRAFFIC CONTROL SHALL BE IN ACCORDANCE WITH LAYOUT 8 OF THE TEMPORARY TRAFFIC CONTROL ZONE LAYOUTS FIELD MANUAL. CONTRACTOR SHALL ALSO PROVIDE SIGNS PER FIGURE 6K-7 OF MINNESOTA TEMPORARY TRAFFIC CONTROL FIELD MANUAL FOR LONGITUDINAL DROP-OFF. NO DROP-OFF WILL BE ALLOWED TO REMAIN OVER NIGHT. WHEN CONTRACTOR IS PERFORMING WORK ON THE RIGHT TURN LANE OR BYPASS LANE, THE CONTRACTOR SHALL CLOSE THE ADJACENT THROUGH LANE AND PROVIDE TWO FLAGGERS PER LAYOUT 16. CLOSURES ARE ONLY ALLOWED BETWEEN THE HOURS OF 9:00 A.M. AND 3:00 P.M. PRIOR TO REMOVING FLAGGERS, THE CONTRACTOR SHALL PROVIDE A 1:4 TAPER CONSTRUCTED OF COMPACTED CLASS 5 AGGREGATE BASE AT ALL DROP-OFFS. SEE DETAIL 1 ON THIS SHEET FOR ADDITIONAL INFORMATION.
2. TEMPORARY SIGNS AND CHANNELIZERS SHALL BE PAID PER ITEM 2563-TRAFFIC CONTROL.
3. ALL TRAFFIC CONTROL FOR HANSON BOULEVARD SHALL BE PERMITTED THROUGH THE ANOKA COUNTY HIGHWAY DEPARTMENT. CONTRACTOR SHALL SUBMIT THE REQUIRED PERMIT APPLICATION MATERIALS TO THE ANOKA COUNTY HIGHWAY DEPARTMENT A MINIMUM OF TWO WEEKS PRIOR TO WORKING IN THE COUNTY RIGHT-OF-WAY.

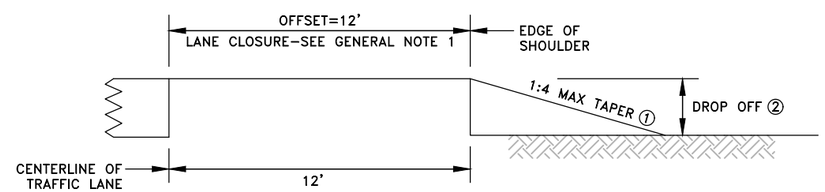

REFERENCE NOTES:

① CONSTRUCT TAPER PRIOR TO OPENING THE TRAVEL LANE WHICH IS ADJACENT TO THE SHOULDER BEING WORKED ON.

② WHEN THE ADJACENT LANE IS CLOSED, THE MAXIMUM ALLOWABLE DROP OFF SHALL BE 36 INCHES. WHEN THE ADJACENT LANE IS REOPENED, THE MAXIMUM DROP OFF SHALL BE 12 INCHES.

1 / 109 DROP OFF DETAIL

NO SCALE

GENERAL NOTES:

1 ALL WORK WITHIN THE ANOKA COUNTY HIGHWAY DEPARTMENT RIGHT OF WAY SHALL BE IN ACCORDANCE WITH THE 2018 MN/DOT STANDARD SPECIFICATIONS FOR CONSTRUCTION.
2 SEE SHEETS 53-56 FOR REMOVALS.
3 SEE SHEETS 74-76 FOR CONSTRUCTION.
4 SEE SHEETS 97-100 FOR EROSION CONTROL.
5 SEE SHEETS 106-107 FOR SIGN AND STRIPING.
6 SEE SHEETS X1-X3 FOR CROSS-SECTIONS.

N

30 0 30 60
SCALE IN FEET

DATE	REVISION

I hereby certify that this plan, specification, or report was prepared by me or under my direct supervision and that I am a duly Licensed Professional Engineer under the laws of the State of Minnesota.

CRAIG J. JOCHUM, P.E.
Date 8/7/20 Lic. No. 23461

DESIGNED BY: CJJ
DRAWN BY: SGJ
CHECKED BY: TAE

Hakanson Anderson
Civil Engineers and Land Surveyors
3601 Thurston Ave., Anoka, Minnesota 55303
763-427-5860 FAX 763-427-0520
www.hakanson-anderson.com

STATE PROJ. NO 0208-166 (TH65=005)
SAP 203-127-001, SAP 203-111-005,
SAP 203-113-003

TRAFFIC CONTROL PLAN

VIKING BOULEVARD
TH 65 EAST SERVICE ROAD PROJECT

SHEET 109 OF 109 SHEETS

EB351

6+50

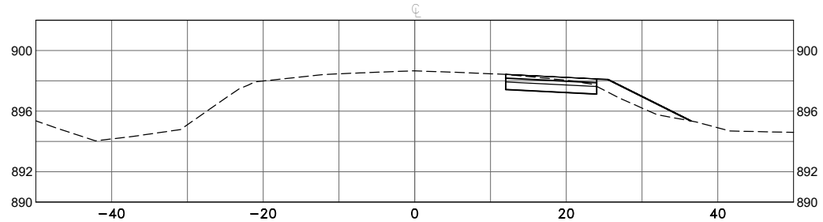

8+50

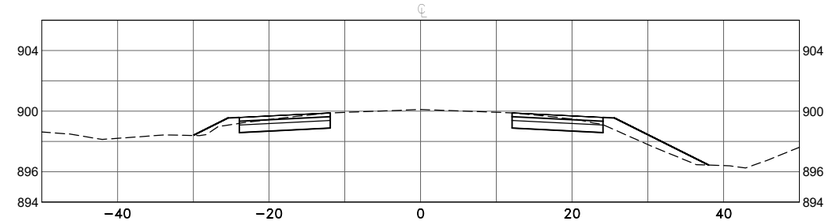

6+00

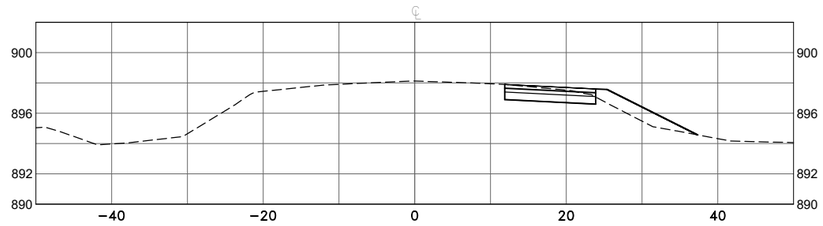

8+00

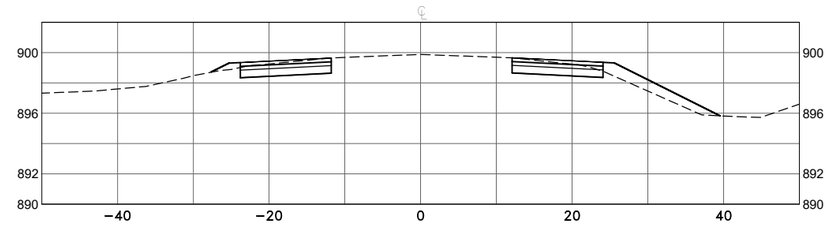

5+50

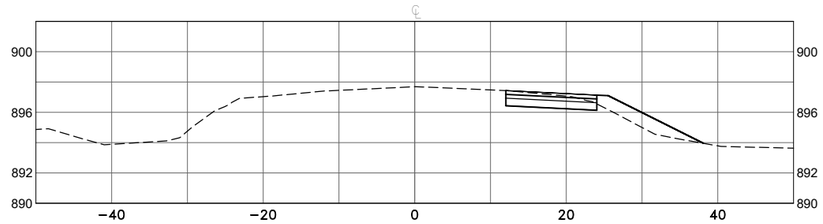

7+50

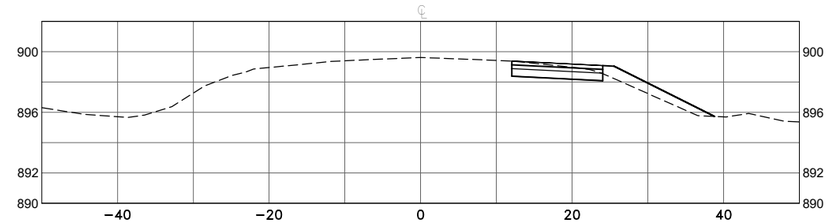

5+00

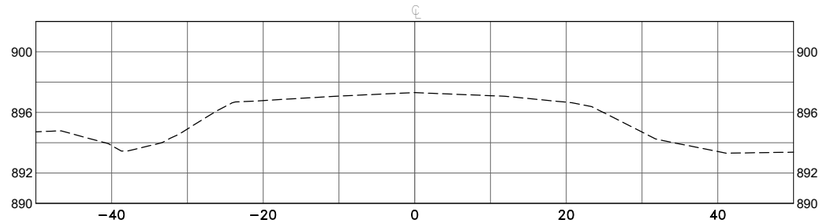

7+00

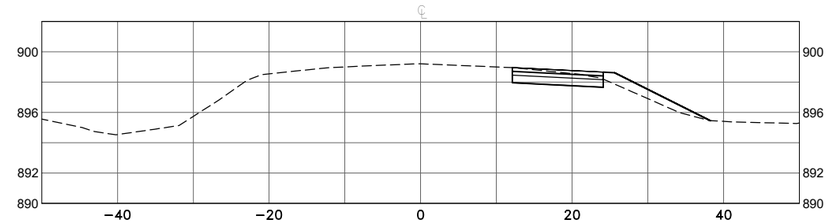

DATE	REVISION

DESIGNED BY: CJJ
DRAWN BY: SGJ
CHECKED BY: TAE

Hakanson Anderson
Civil Engineers and Land Surveyors
3601 Thurston Ave., Anoka, Minnesota 55303
763-427-5860 FAX 763-427-0520
www.hakanson-anderson.com

STATE PROJ. NO 0208-166 (TH65=005)
SAP 203-127-001, SAP 203-111-005,
SAP 203-113-003

CROSS SECTIONS

VIKING BOULEVARD
TH 65 EAST SERVICE ROAD PROJECT

SHEET X1 OF X3 SHEETS

EB351

Aug 19, 2020 – 1:20pm
K:\MUNICIPAL\EB351\ENGINEERING\EB351_BA.dwg

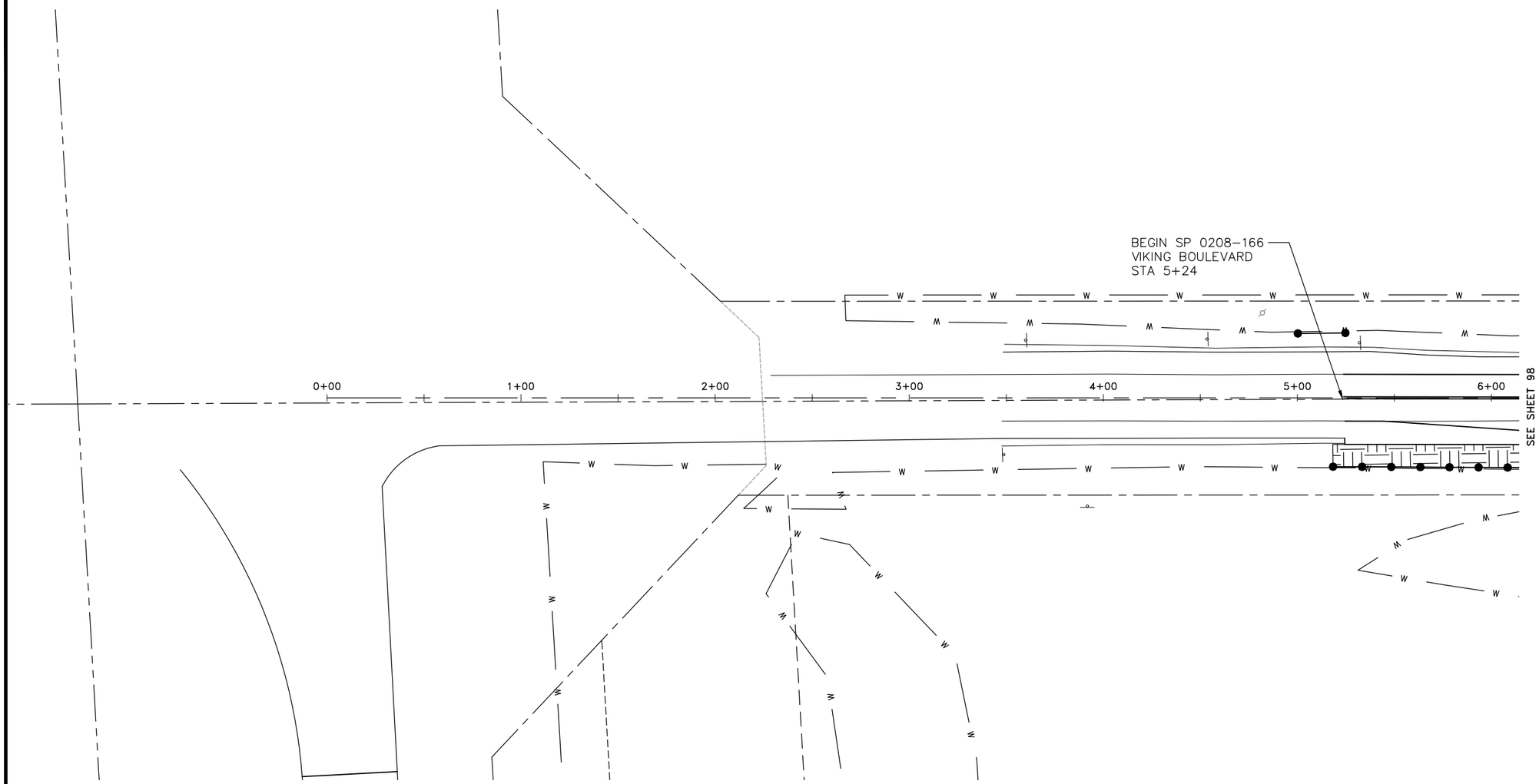

LEGEND

PROPOSED CATEGORY 3 EROSION CONTROL BLANKET, SEED MIXTURE 25-121 ①

SILT FENCE

GENERAL NOTES:

1 ALL WORK WITHIN THE ANOKA COUNTY HIGHWAY DEPARTMENT RIGHT OF WAY SHALL BE IN ACCORDANCE WITH THE 2018 MN/DOT STANDARD SPECIFICATIONS FOR CONSTRUCTION.
2 SEE SHEETS 53-56 FOR REMOVALS.
3 SEE SHEETS 74-76 FOR CONSTRUCTION.
4 SEE SHEETS 106-107 FOR SIGNING AND STRIPING.
5 SEE SHEETS 108-109 FOR TRAFFIC CONTROL.
6 SEE SHEETS X1-X3 FOR CROSS-SECTIONS.
7 ALL DISTURBED AREAS REQUIRE 4" OF SALVAGED TOPSOIL, SEED, FERTILIZER AND CATEGORY 3 EROSION CONTROL BLANKET. TURF ESTABLISHMENT SHALL CONFORM TO MN/DOT STANDARD SPECIFICATIONS.
8 SEE SHEET 6 FOR APPLICATION RATES FOR SEED AND FERTILIZER.

REFERENCE NOTES:

① CATEGORY 3 EROSION CONTROL BLANKET SHALL BE WOOD FIBER WITH NATURAL NETTING MEETING THE REQUIRMENTS OF MN/DOT SPEC. 3885.

N

30 0 30 60
SCALE IN FEET

DATE	REVISION

I hereby certify that this plan, specification, or report was prepared by me or under my direct supervision and that I am a duly Licensed Professional Engineer under the laws of the State of Minnesota.

Date 8/7/20 CRAIG J. JOCHUM, P.E. Lic. No. 23461

DESIGNED BY: CJJ
DRAWN BY: SGJ
CHECKED BY: TAE

Hakanson Anderson
Civil Engineers and Land Surveyors
3601 Thurston Ave., Anoka, Minnesota 55303
763-427-5860 FAX 763-427-0520
www.hakanson-anderson.com

STATE PROJ. NO 0208-166 (TH65=005)
SAP 203-127-001, SAP 203-111-005,
SAP 203-113-003

EROSION CONTROL PLANS

VIKING BOULEVARD
TH 65 EAST SERVICE ROAD PROJECT

EB351

LEGEND

PROPOSED CATEGORY 3 EROSION CONTROL BLANKET, SEED MIXTURE 25-121 ①

SILT FENCE

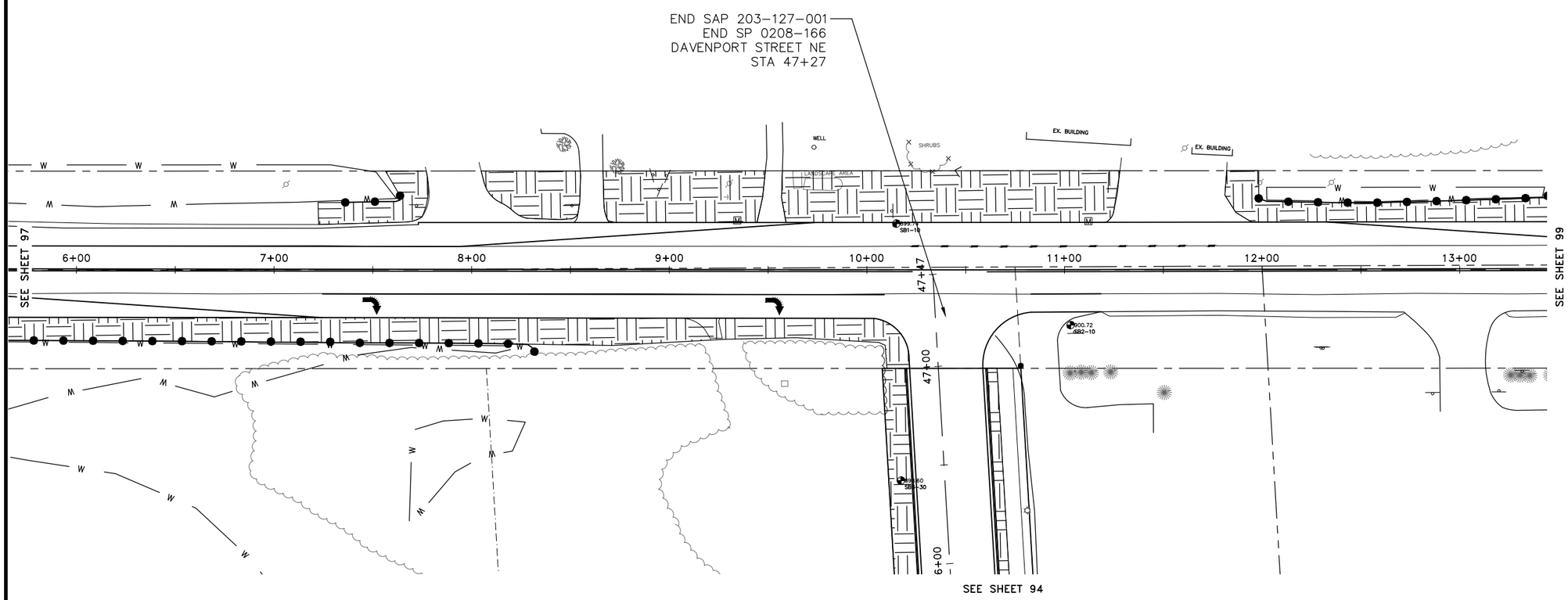

GENERAL NOTES:

1 ALL WORK WITHIN THE ANOKA COUNTY HIGHWAY DEPARTMENT RIGHT OF WAY SHALL BE IN ACCORDANCE WITH THE 2018 MN/DOT STANDARD SPECIFICATIONS FOR CONSTRUCTION.

2 SEE SHEETS 53-56 FOR REMOVALS.

3 SEE SHEETS 74-76 FOR CONSTRUCTION.

4 SEE SHEETS 106-107 FOR SIGNING AND STRIPING.

5 SEE SHEETS 108-109 FOR TRAFFIC CONTROL.

6 SEE SHEETS X1-X3 FOR CROSS-SECTIONS.

7 ALL DISTURBED AREAS REQUIRE 4" OF SALVAGED TOPSOIL, SEED, FERTILIZER AND CATEGORY 3 EROSION CONTROL BLANKET. TURF ESTABLISHMENT SHALL CONFORM TO MN/DOT STANDARD SPECIFICATIONS.

8 SEE SHEET 6 FOR APPLICATION RATES FOR SEED AND FERTILIZER.

REFERENCE NOTES:

① CATEGORY 3 EROSION CONTROL BLANKET SHALL BE WOOD FIBER WITH NATURAL NETTING MEETING THE REQUIRMENTS OF MN/DOT SPEC. 3885.

N

30 0 30 60
SCALE IN FEET

DATE	REVISION

I hereby certify that this plan, specification, or report was prepared by me or under my direct supervision and that I am a duly Licensed Professional Engineer under the laws of the State of Minnesota.

CRAIG J. JOCHUM, P.E.
Date 8/7/20 Lic. No. 23461

DESIGNED BY: CJJ
DRAWN BY: SGJ
CHECKED BY: TAE

Hakanson Anderson
Civil Engineers and Land Surveyors
3601 Thurston Ave., Anoka, Minnesota 55303
763-427-5860 FAX 763-427-0520
www.hakanson-anderson.com

STATE PROJ. NO 0208-166 (TH65=005)
SAP 203-127-001, SAP 203-111-005,
SAP 203-113-003

EROSION CONTROL PLANS

VIKING BOULEVARD
TH 65 EAST SERVICE ROAD PROJECT

EB351

Aug 19, 2020 – 1:18pm
K:\MUNICIPAL\EB351\ENGINEERING\EB351_EROSION CONTROL_1.dwg

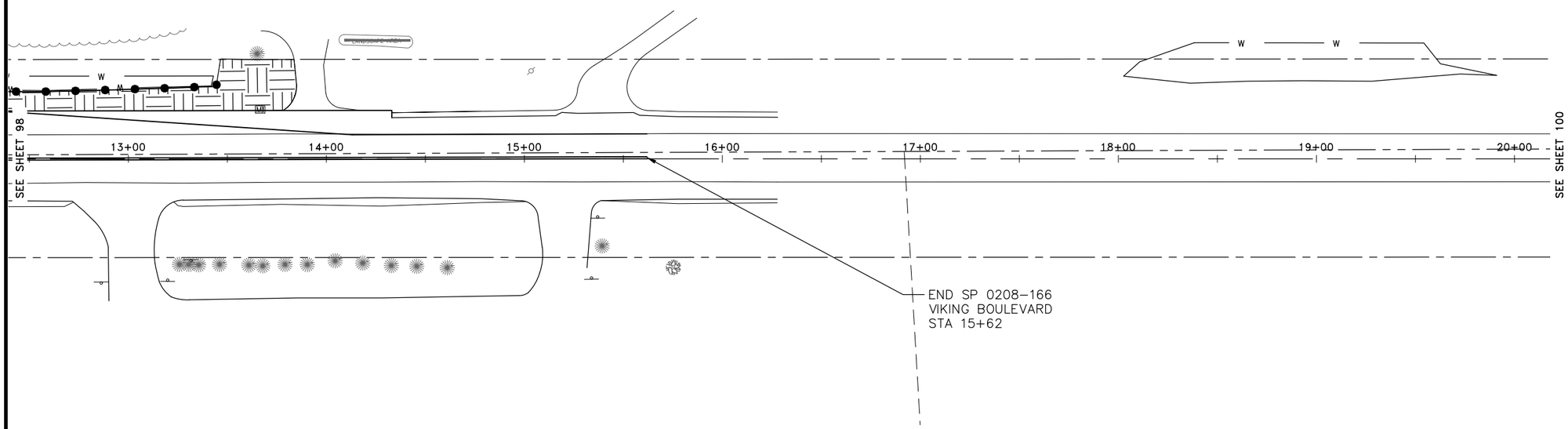

LEGEND

PROPOSED CATEGORY 3 EROSION CONTROL BLANKET, SEED MIXTURE 25-121 ①

SILT FENCE

GENERAL NOTES:

1 ALL WORK WITHIN THE ANOKA COUNTY HIGHWAY DEPARTMENT RIGHT OF WAY SHALL BE IN ACCORDANCE WITH THE 2018 MN/DOT STANDARD SPECIFICATIONS FOR CONSTRUCTION.
2 SEE SHEETS 53-56 FOR REMOVALS.
3 SEE SHEETS 74-76 FOR CONSTRUCTION.
4 SEE SHEETS 106-107 FOR SIGNING AND STRIPING.
5 SEE SHEETS 108-109 FOR TRAFFIC CONTROL.
6 SEE SHEETS X1-X3 FOR CROSS-SECTIONS.
7 ALL DISTURBED AREAS REQUIRE 4" OF SALVAGED TOPSOIL, SEED, FERTILIZER AND CATEGORY 3 EROSION CONTROL BLANKET. TURF ESTABLISHMENT SHALL CONFORM TO MN/DOT STANDARD SPECIFICATIONS.
8 SEE SHEET 6 FOR APPLICATION RATES FOR SEED AND FERTILIZER.

REFERENCE NOTES:

① CATEGORY 3 EROSION CONTROL BLANKET SHALL BE WOOD FIBER WITH NATURAL NETTING MEETING THE REQUIRMENTS OF MN/DOT SPEC. 3885.

N

30 0 30 60
SCALE IN FEET

DATE	REVISION

I hereby certify that this plan, specification, or report was prepared by me or under my direct supervision and that I am a duly Licensed Professional Engineer under the laws of the State of Minnesota.

CRAIG J. JOCHUM, P.E.
Date 8/7/20 Lic. No. 23461

DESIGNED BY: CJJ
DRAWN BY: SGJ
CHECKED BY: TAE

Hakanson Anderson
Civil Engineers and Land Surveyors
3601 Thurston Ave., Anoka, Minnesota 55303
763-427-5860 FAX 763-427-0520
www.hakanson-anderson.com

STATE PROJ. NO 0208-166 (TH65=005)
SAP 203-127-001, SAP 203-111-005,
SAP 203-113-003

EROSION CONTROL PLANS

VIKING BOULEVARD
TH 65 EAST SERVICE ROAD PROJECT

EB351

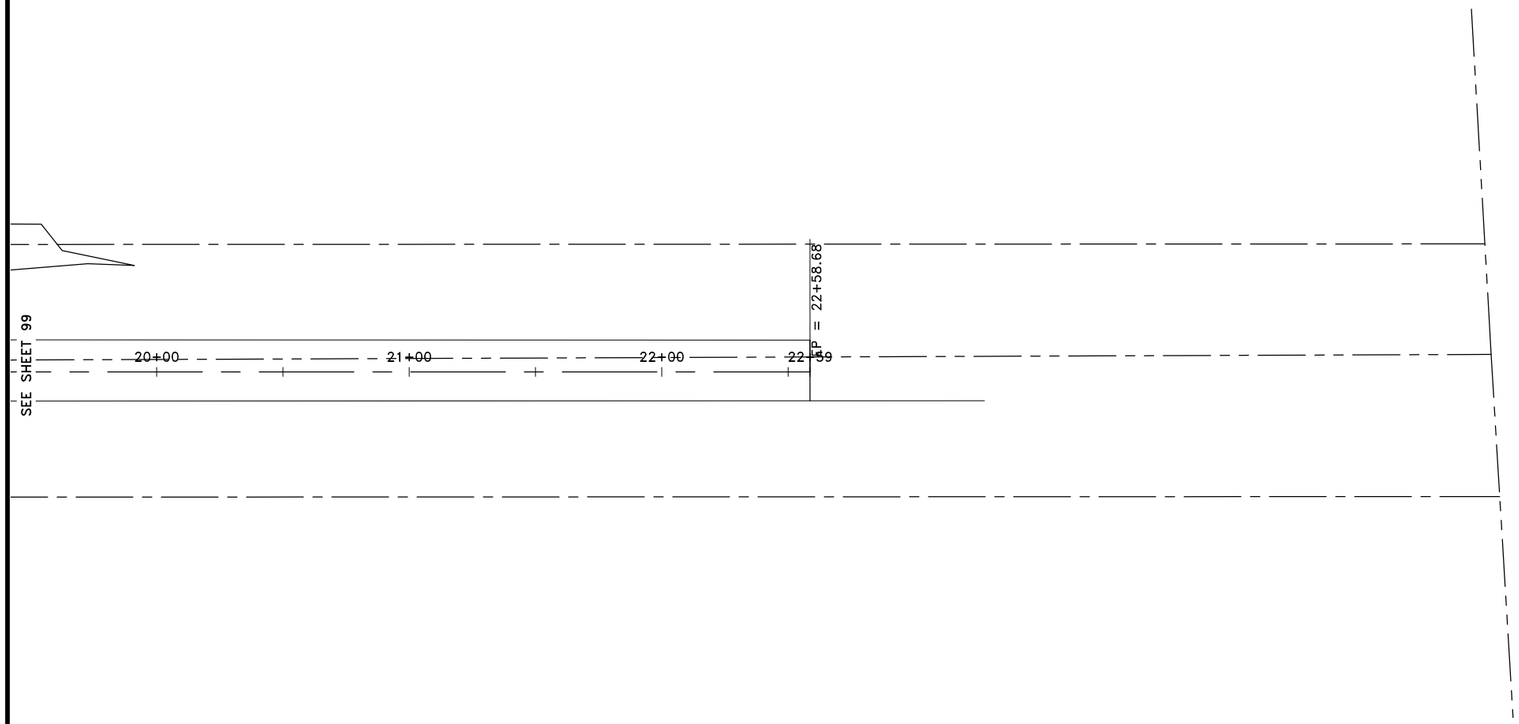

LEGEND

PROPOSED CATEGORY 3 EROSION CONTROL BLANKET, SEED MIXTURE 25-121 ①

SILT FENCE

GENERAL NOTES:

1 ALL WORK WITHIN THE ANOKA COUNTY HIGHWAY DEPARTMENT RIGHT OF WAY SHALL BE IN ACCORDANCE WITH THE 2018 MN/DOT STANDARD SPECIFICATIONS FOR CONSTRUCTION.
2 SEE SHEETS 53-56 FOR REMOVALS.
3 SEE SHEETS 74-76 FOR CONSTRUCTION.
4 SEE SHEETS 106-107 FOR SIGNING AND STRIPING.
5 SEE SHEETS 108-109 FOR TRAFFIC CONTROL.
6 SEE SHEETS X1-X3 FOR CROSS-SECTIONS.
7 ALL DISTURBED AREAS REQUIRE 4" OF SALVAGED TOPSOIL, SEED, FERTILIZER AND CATEGORY 3 EROSION CONTROL BLANKET. TURF ESTABLISHMENT SHALL CONFORM TO MN/DOT STANDARD SPECIFICATIONS.
8 SEE SHEET 6 FOR APPLICATION RATES FOR SEED AND FERTILIZER.

REFERENCE NOTES:

① CATEGORY 3 EROSION CONTROL BLANKET SHALL BE WOOD FIBER WITH NATURAL NETTING MEETING THE REQUIRMENTS OF MN/DOT SPEC. 3885.

N

30 0 30 60
SCALE IN FEET

DATE	REVISION

I hereby certify that this plan, specification, or report was prepared by me or under my direct supervision and that I am a duly Licensed Professional Engineer under the laws of the State of Minnesota.

CRAIG J. JOCHUM, P.E.
Date 8/7/20 Lic. No. 23461

DESIGNED BY: CJJ
DRAWN BY: SGJ
CHECKED BY: TAE

Hakanson Anderson
Civil Engineers and Land Surveyors
3601 Thurston Ave., Anoka, Minnesota 55303
763-427-5860 FAX 763-427-0520
www.hakanson-anderson.com

STATE PROJ. NO 0208-166 (TH65=005)
SAP 203-127-001, SAP 203-111-005,
SAP 203-113-003

EROSION CONTROL PLANS

VIKING BOULEVARD
TH 65 EAST SERVICE ROAD PROJECT

EB351

Aug 19, 2020 - 1:19pm
K:\MUNICIPAL\EB351\ENGINEERING\EB351_EROSION CONTROL_1.dwg

10+50

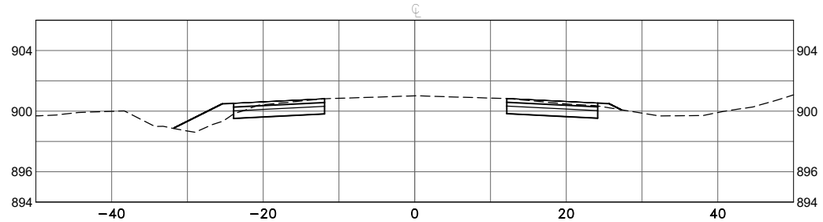

12+50

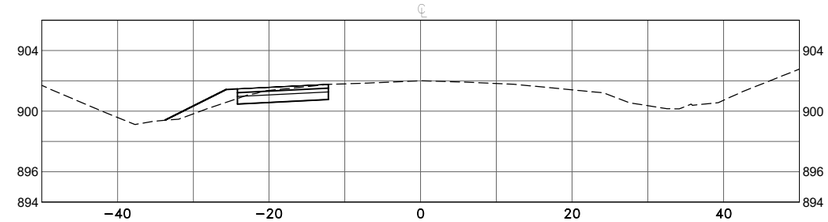

10+00

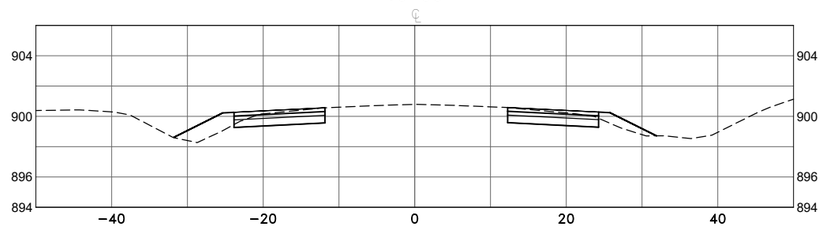

12+00

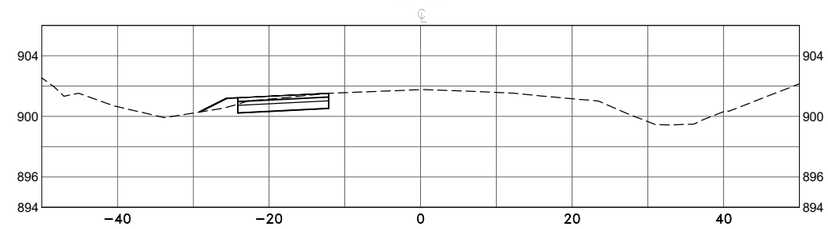

9+50

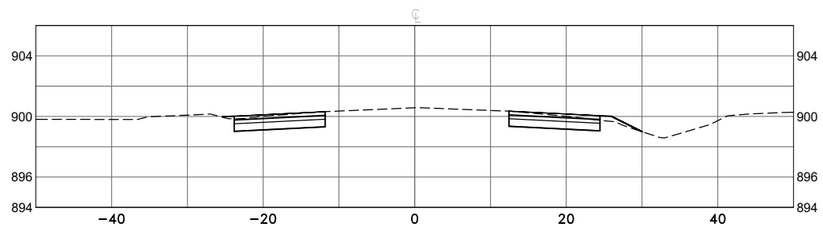

11+50

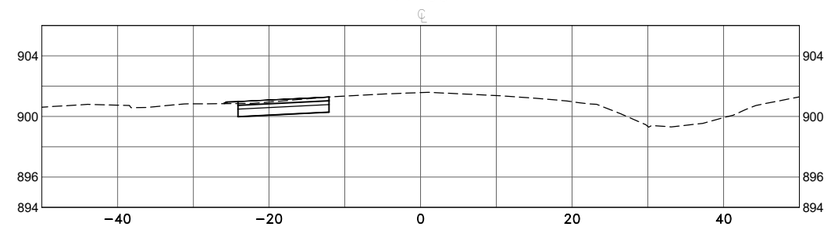

9+00

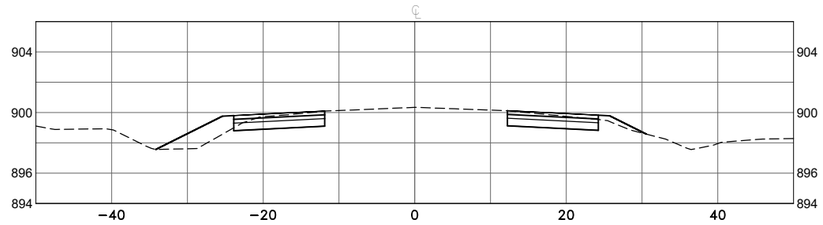

11+00

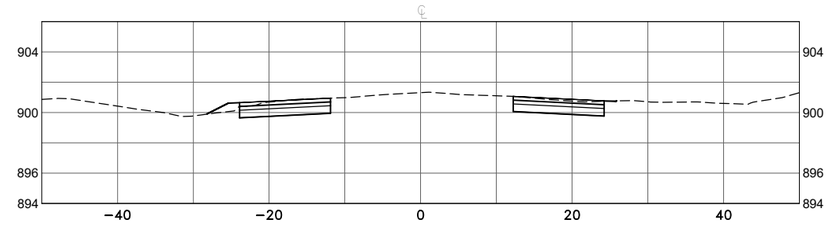

Aug 19, 2020 – 1:20pm
K:\MUNICIPAL\EB351\ENGINEERING\EB351_BA.dwg

DATE	REVISION

REVIEW COPY

DESIGNED BY: CJJ
DRAWN BY: SGJ
CHECKED BY: TAE

Hakanson Anderson
Civil Engineers and Land Surveyors
3601 Thurston Ave., Anoka, Minnesota 55303
763-427-5860 FAX 763-427-0520
www.hakanson-anderson.com

STATE PROJ. NO 0208-166 (TH65=005)
SAP 203-127-001, SAP 203-111-005,
SAP 203-113-003

CROSS SECTIONS

VIKING BOULEVARD
TH 65 EAST SERVICE ROAD PROJECT

SHEET X2 OF X3 SHEETS

EB351

15+00

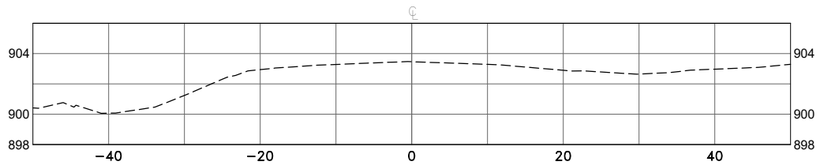

14+50

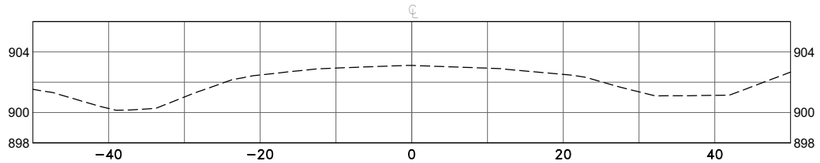

14+00

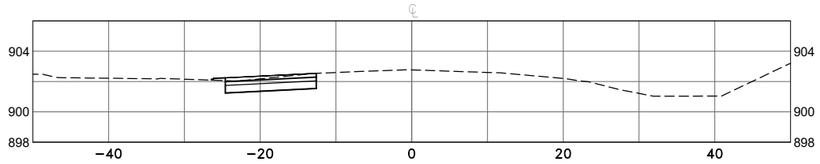

13+50

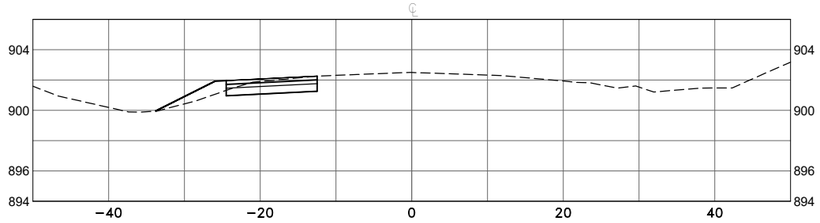

13+00

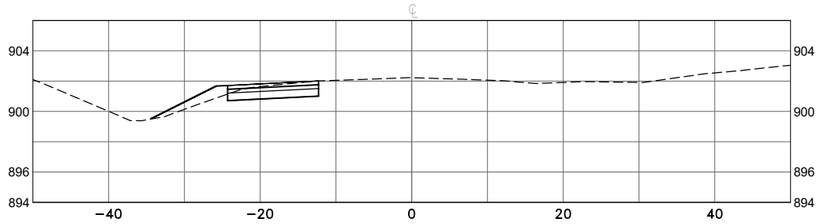

Aug 19, 2020 – 1:20pm
K:\MUNICIPAL\EB351\ENGINEERING\EB351_BA.dwg

DATE	REVISION

DESIGNED BY: CJJ
DRAWN BY: SGJ
CHECKED BY: TAE

Hakanson Anderson
Civil Engineers and Land Surveyors
3601 Thurston Ave., Anoka, Minnesota 55303
763-427-5860 FAX 763-427-0520
www.hakanson-anderson.com

STATE PROJ. NO 0208-166 (TH65=005)
SAP 203-127-001, SAP 203-111-005,
SAP 203-113-003

CROSS SECTIONS

VIKING BOULEVARD
TH 65 EAST SERVICE ROAD PROJECT

SHEET X3 OF X3 SHEETS

EB351