DESCRIPTION OF PROPERTY SURVEYED

(Per Deed Record No. 211, Instrument No. 140739)

Part of the East Half (E1/2) of the Southwest Quarter (SW1/4) in Section twenty-one (21), Township thirty-one North (31), Range twenty-three west (23), Anoka County, Minnesota.

Subject to roads.

This Deed has other property not part of this survey.

TITLE COMMITMENT

This survey was prepared without the benefit of current title work. Easements, appurtenances, and encumbrances may exist in addition to those shown hereon. This survey is subject to revision upon receipt of a current title insurance commitment or attorney's title opinion.

GENERAL NOTES

1.) Survey coordinate basis: Anoka County Coordinate System (NAD83-1996 Adjustment)

2.) Latitude: 45° 09 37.3 – Northeast corner of property
Longitude: -93° 12 54.2

3.) At the time fieldwork was performed for this survey, there was a significant amount of snow on the ground. Physical features were located to the best of our ability, but there may be additional features that were not visible and, therefore, not shown hereon.

UTILITY NOTES

1.) Utility information from plans and markings was combined with observed evidence of utilities to develop a view of the underground utilities shown hereon. However, lacking excavation, the exact location of underground features cannot be accurately, completely and reliably depicted. In addition, Gopher State One Call locate requests from surveyors may be ignored or result in an incomplete response. Where additional or more detailed information is required, excavation and/or a private utility locate request may be necessary.

2.) Other underground utilities of which we are unaware may exist. Verify all utilities critical to construction or design.

3.) Some underground utility locations are shown as marked onsite by those utility companies whose locators responded to our Gopher State One Call, ticket numbers 223620341 and 223620349.

4.) Contact GOPHER STATE ONE CALL at 651-454-0002 (800-252-1166) for precise onsite location of utilities prior to any excavation.

5.) Private utilities are shown as marked by Hance Locating Services, Inc. on January 5, 2023. Private utilities are those utilities installed for the use of their owner, typically by someone other than a Gopher State One Call registered utility operator.

LEGEND

O	Denotes 1.17 inch diameter copper magnetized marker with disc cap affixed stamped LS-44890 set
AIS	Denotes advertising and information sign
BTL	Denotes beavertail curb
CB	Denotes catch basin
GW	Denotes guy wire
HCR	Denotes disabled ramp
HCS	Denotes disabled sign
HHC	Denotes communication handhole
HHF	Denotes fiber optic handhole
HYD	Denotes fire hydrant
INV	Denotes structure invert
LP	Denotes light pole
OHE	Denotes overhead electric line
(P)	Denotes per plan
PEP	Denotes polyethylene pipe
PPU	Denotes power pole with underground utility
PVC	Denotes polyvinylchloride pipe
RCP	Denotes reinforced concrete pipe
SAN S	Denotes sanitary sewer
SMH	Denotes storm manhole
ST S	Denotes storm sewer
TAD	Denotes truncated domes plate
TC	Denotes top of concrete curb
TCS	Denotes traffic control sign
TL	Denotes traffic light
UGC	Denotes underground communication line
UGE	Denotes underground electric line
W	Denotes water line
COT	Denotes Cottonwood tree
MPL	Denotes Maple tree
SPR	Denotes Spruce tree

BENCHMARKS (BM)

(NAVD 88)

1.) Top of top nut of 1st fire hydrant west of Radisson Road NE on the north side of 105th Avenue NE.
Elevation = 910.46 feet

2.) Top of top nut of 2nd fire hydrant west of Radisson Road NE on the north side of 105th Avenue NE.
Elevation = 907.00 feet

I hereby certify that this survey, plan, or report was prepared by me or under my direct supervision and that I am a duly Licensed Land Surveyor under the laws of the State of Minnesota.

Dated this 19th day of January, 2023

SUNDE LAND SURVEYING, LLC

By: Leonard F. Carlson

Leonard F. Carlson, P.L.S. Minn. Lic. No. 44890

N

30 0 30 60
SCALE IN FEET

Revision	By	Date
	MAP	

Drawing Title:
PARTIAL BOUNDARY, LOCATION, TOPOGRAPHIC and UTILITY SURVEY FOR:
BKBM ENGINEERS
2030 105TH AVE. NE, BLAINE, MN

SUNDE LAND SURVEYING
www.sunde.com
Main Office:
9001 East Bloomington Freeway (35W) • Suite 118
Bloomington, Minnesota 55420-3435
952-881-2455 (Fax: 952-888-9526)

Project: 2022-156 Bk/Pg: 1248/46	Date: 1/19/2023
Township: 31 Range: 23 Section: 21	
File: 2022156001.dwg	Sheet: 1 of 1

1 C100 SELECTIVE SITE DEMOLITION AND EROSION CONTROL PLAN
1" = 40'

PROPOSED PLAN SYMBOLS

- CONSTRUCTION LIMITS
- SILTATION FENCE
- SEDIMENT CONTROL LOG
- PROPERTY LINE
- SAWCUT LINE (APPROX.)
- ROCK CONSTRUCTION ENTRANCE
- BITUMINOUS REMOVAL
- CONCRETE REMOVAL
- CURB REMOVAL
- PIPE REMOVAL
- TREE REMOVAL

*NOTE: CONSTRUCTION LIMITS ARE ANTICIPATED TO BE PROPERTY LINE UNLESS OTHERWISE SHOWN.

ABBREVIATIONS

AIS	Advertising Sign
BM	Benchmark
CB	Catch Basin
CONC	Concrete
ELEV	Elevation
EX	Existing
HHF	Fiber Optic Handhole
INV	Invert
RCP	Reinforced Concrete Pipe
SAN	Sanitary Sewer Manhole
SMH	Storm Sewer Manhole
TCS	Traffic Control Sign
TL	Traffic Light
TNH	Top Nut Hydrant
TOP	Top of Structure Elevation
UGC	Under Ground Cable
UGE	Under Ground Electrical

NOTE:
STORM SEWER INLETS NOT SHOWN ON PLAN MAY RECEIVE RUNOFF FROM CONSTRUCTION ACTIVITIES. INSTALL INLET SEDIMENT PROTECTION PER DETAIL 4/C500 ON ALL STORM INLETS THAT MAY RECEIVE RUNOFF.

NOTE:
PRIOR TO THE START OF CONSTRUCTION, THE CONTRACTOR SHALL POTHOLE AND DETERMINE THE LOCATION AND ELEVATION OF EXISTING UNDERGROUND UTILITIES. CONTACT CIVIL ENGINEER IF EXISTING UTILITIES TO REMAIN WILL BE IMPACTED BY PROPOSED WORK.

N

40' 20' 0 40' 80'
SCALE 1" = 40'

NOTE:
FOR WORK WITHIN ANOKA COUNTY R/W: THE 2020 EDITION OF THE MINNESOTA DEPARTMENT OF TRANSPORTATION 'STANDARD SPECIFICATIONS FOR CONSTRUCTION' AND THE 'SUPPLEMENTAL SPECIFICATIONS DATED SEPTEMBER 2022 SHALL GOVERN.

KEYED NOTES

KEYED NOTES ARE DENOTED BY NO ON PLAN.

1. INSTALL ROCK CONSTRUCTION ENTRANCE. REFER TO DETAIL 1/C500.
2. INSTALL PERIMETER EROSION CONTROL. REFER TO DETAILS 2/C500 AND 3/C500.
3. INSTALL INLET SEDIMENT PROTECTION. REFER TO DETAIL 4/C500.
4. SAWCUT AND REMOVE BITUMINOUS PAVEMENT IN ITS ENTIRETY TO THE APPROXIMATE EXTENTS SHOWN.
5. REMOVE CURB AND GUTTER IN ITS ENTIRETY TO THE APPROXIMATE EXTENTS SHOWN. SAWCUT AND REMOVE AT NEAREST JOINT.
6. REMOVE TREE IN ITS ENTIRETY INCLUDING STUMP.
7. REMOVE SIGN IN ITS ENTIRETY INCLUDING FOOTING. SIGN TO BE SALVAGED AND REINSTALLED.
8. REMOVE AND SALVAGE WOODEN STRUCTURE. REFER TO C400 FOR PROPOSED LOCATION.
9. SAWCUT AND REMOVE CONCRETE PAVEMENT IN ITS ENTIRETY TO THE APPROXIMATE EXTENTS SHOWN.
10. EXISTING BITUMINOUS PAVEMENT TO REMAIN. PROTECT AT ALL TIMES.
11. EXISTING CONCRETE PAVEMENT TO REMAIN. PROTECT AT ALL TIMES.
12. EXISTING FIBER OPTIC CABLE TO REMAIN. PROTECT AT ALL TIMES.
13. EXISTING CURB TO REMAIN. PROTECT AT ALL TIMES.
14. EXISTING TREE TO REMAIN. PROTECT AT ALL TIMES.
15. EXISTING TRAFFIC LIGHT, STREET LIGHT, AND UNDERGROUND ELECTRICAL TO REMAIN. PROTECT AT ALL TIMES.
16. EXISTING SIGN TO REMAIN. PROTECT AT ALL TIMES.
17. REMOVE SIGN IN ITS ENTIRETY INCLUDING FOOTING.
18. REMOVE EXISTING STRIPING FROM PAVEMENT. BLACK COVER UP PAINT IS NOT ACCEPTABLE.
19. REMOVE STORM SEWER IN ITS ENTIRETY TO THE EXTENTS SHOWN.
20. REMOVE WATERMAIN FOR PROPOSED SERVICE CONNECTION.
21. EXISTING LIGHT POLE TO REMAIN. PROTECT AT ALL TIMES.
22. EXISTING FENCE TO REMAIN. PROTECT AT ALL TIMES.

DEMOLITION AND REMOVAL NOTES:

1. CONTRACTOR SHALL FOLLOW ALL CITY OF BLAINE STANDARDS AND SPECIFICATIONS.
2. PRIOR TO START OF ANY CONSTRUCTION ACTIVITY, ALL EROSION AND SEDIMENT CONTROL MEASURES ARE TO BE INSTALLED BY THE CONTRACTOR AND INSPECTED BY THE CITY OF BLAINE AND COON CREEK WATERSHED DISTRICT. PERIMETER SEDIMENT PROTECTION SHALL BE INSTALLED ALONG THE CONTOUR.
3. IT IS THE CONTRACTOR'S RESPONSIBILITY TO ASCERTAIN THE LOCATION OF ALL EXISTING UTILITIES. THE CONTRACTOR SHALL VERIFY THE LOCATION, ELEVATION AND MARK ALL EXISTING UTILITIES 48 HOURS BEFORE CONSTRUCTION STARTS. THE ENGINEER, ARCHITECT, OR OWNER DOES NOT GUARANTEE THAT ALL THE UTILITIES ARE MAPPED, OR, IF MAPPED, ARE SHOWN CORRECTLY. CONTACT GOPHER STATE ONE CALL AT 651–454–0002 FOR FIELD LOCATING EXISTING UTILITIES. CONTACT UTILITY OWNER IF DAMAGE OCCURS DUE TO CONSTRUCTION.
4. THERE MAY BE MISCELLANEOUS ITEMS TO BE REMOVED THAT ARE NOT IDENTIFIED ON THESE PLANS. THE CONTRACTOR SHALL VISIT THE SITE AND REVIEW THE DOCUMENTS TO OBTAIN A CLEAR UNDERSTANDING OF THE INTENDED SCOPE OF WORK.
5. ANY UTILITIES NOT INDICATED FOR REMOVAL OR ABANDONMENT ARE TO BE PROTECTED AT ALL TIMES.
6. EXISTING CONCRETE PAVEMENT AND CURB AND GUTTER SHOWN TO BE REMOVED WITHIN THE SCOPE OF THE PROJECT SHALL BE REMOVED FROM THE SAW CUT LINES TO THE NEAREST JOINT.
7. THE BACKGROUND INFORMATION WAS PREPARED BY SUNDE LAND SURVEYING, (952) 881–2455.
8. ALL WORK IN THE PUBLIC RIGHT OF WAY IS TO BE COORDINATED WITH THE CITY OF BLAINE AND ANOKA COUNTY. ROADWAY REPAIRS, BOULEVARD REPAIRS, AND TRAFFIC CONTROL ARE TO BE PER CITY OF BLAINE AND ANOKA STANDARDS AND SPECIFICATIONS.

GENERAL NOTES:

1. CONCRETE PAVEMENT, CONCRETE CURB AND GUTTER REMOVAL, AND PAVEMENT REMOVAL REMOVAL LIMITS ARE TO BE COORDINATED WITH THE CITY OF BLAINE.
2. THE CONTRACTOR SHALL DEVELOP AND IMPLEMENT A TRAFFIC CONTROL PLAN WHILE WORKING WITHIN THE RIGHT–OF–WAY. THE TRAFFIC CONTROL PLAN SHALL BE APPROVED BY THE CITY AND COUNTY ENGINEERING DEPARTMENT PRIOR TO STREET ENCROACHMENT.
3. CONTRACTOR SHALL VISIT THE SITE PRIOR TO BIDDING AND REVIEW ALL CONSTRUCTION DOCUMENTS AND GEOTECHNICAL REPORTS. NO ADDITIONAL COMPENSATION WILL BE ALLOWED FOR ITEMS THAT SHOULD HAVE BEEN ANTICIPATED BY PERFORMING THE ABOVE.
4. THE CONSTRUCTION ENTRANCE INDICATED ON THE PLAN IS SHOWN IN AN APPROXIMATE LOCATION. PRIOR TO START OF CONSTRUCTION, THE CONTRACTOR IS TO COORDINATE WITH THE CITY OF BLAINE FOR THE EXACT CONSTRUCTION ENTRANCE LOCATION.

OWNER:
PINPOINT
Contact: Mike Breese
Phone: 612-978-3688
Email: mike@pinpointeg.com

little box
Address: 2744 Lyndale Ave S
Minneapolis, MN 55408
Phone: 612-804-6314
Email: jnelson@littleboxinc.com

CIVIL & STRUCTURAL:
BKBM ENGINEERS
Address: 6120 Earle Brown Dr. Ste 700
Minneapolis, MN 55430
Civil Phone: 763-843-0427
Structure Phone: 763-843-0443
BKBM Project No. 23169.50

MEP:
EEA ERICKSEN ELLISON and Associates Inc.
Address: 305 2nd St NW Suite 105
New Brighton, MN 55112
Phone: 651-632-2300

LANDSCAPE:
DF/ DAMON FARBER
LANDSCAPE ARCHITECTS
Address: 310 S 4th Ave. Ste 7050
Minneapolis, MN 55415
Phone: 763-257-7928

I hereby certify that this plan, specification or report was prepared by me or under my direct supervision and that I am a duly Licensed PROFESSIONAL ENGINEER *under the laws of the State of MN*

Kevin A. Bohl

Kevin A. Bohl
License Number: 52209 Date: 07/12/2023

SOUTH SIDE ENTERTAINMENT DISTRICT

A Development By:
PinPoint Equity Group

NO	DESCRIPTION	DATE

P

PROJ NO	
DATE	2023/07/12
DRAWN BY	WH
CHECK BY	NPA

SELECTIVE SITE DEMOLITION AND EROSION CONTROL PLAN

C100

1 C200 GRADING, DRAINAGE, AND EROSION CONTROL PLAN
1" = 40'

APPROXIMATE DISTURBED AREA IS 4.11 ACRES

NOTE:
STORM SEWER INLETS NOT SHOWN ON PLAN MAY RECEIVE RUNOFF FROM CONSTRUCTION ACTIVITIES. INSTALL INLET SEDIMENT PROTECTION PER DETAIL 4/C500 ON ALL STORM INLETS THAT MAY RECEIVE RUNOFF.

NOTE:
REFER TO C201 FOR GRADING NOTES AND EROSION CONTROL NOTES.

PROPOSED PLAN SYMBOLS

- CONSTRUCTION LIMITS
- SILTATION FENCE
- SEDIMENT CONTROL LOG
- PROPERTY LINE
- SAWCUT LINE (APPROX.)
- PROPOSED CONTOUR (907)
- STORM SEWER
- DRAIN TILE
- CATCH BASIN
- MANHOLE
- ROCK CONSTRUCTION ENTRANCE
- DRAINAGE FLOW ARROW (1.0%)
- SPOT ELEVATION (09.00)
- SOIL BORING (ST-1)
- CONCRETE WASHOUT AREA (CONCRETE W.O. AREA)

*NOTE: CONSTRUCTION LIMITS ARE ANTICIPATED TO BE PROPERTY LINE UNLESS OTHERWISE SHOWN.

ABBREVIATIONS

AIS	Advertising Sign
BM	Benchmark
CB	Catch Basin
CONC	Concrete
ELEV	Elevation
EX	Existing
FFE	Finished Floor Elevation
HHF	Fiber Optic Handhole
HWL	High Water Level
INV	Invert
NWL	Normal Water Level
P	Polyvinyl Chloride
RCP	Reinforced Concrete Pipe
SMH	Storm Sewer Manhole
TC	Top of Curb
TCS	Traffic Control Sign
TL	Traffic Light
TNH	Top Nut Hydrant
TOP	Top of Structure Elevation
UGC	Under Ground Cable
UGE	Under Ground Electrical
W.O.	Washout

WALKWAY NOTES:

1. GRADING CONTRACTOR IS TO COORDINATE WITH PAVING CONTRACTOR SO THAT ALL STEPS AND LANDINGS ARE SLOPED PER CODE.
2. ALL SIDEWALK LONGITUDINAL AND TRANSVERSE SLOPES ARE TO BE PER CODE.

N

40' 20' 0 40' 80'
SCALE 1" = 40'

NOTE:
FOR WORK WITHIN ANOKA COUNTY R/W: THE 2020 EDITION OF THE MINNESOTA DEPARTMENT OF TRANSPORTATION "STANDARD SPECIFICATIONS FOR CONSTRUCTION AND THE "SUPPLEMENTAL SPECIFICATIONS DATED SEPTEMBER 2022 SHALL GOVERN.

KEYED NOTES

KEYED NOTES ARE DENOTED BY NO ON PLAN.

1. INSTALL ROCK CONSTRUCTION ENTRANCE. REFER TO DETAIL 1/C500.
2. INSTALL PERIMETER EROSION CONTROL. REFER TO DETAILS 2/C500 AND 3/C500.
3. INSTALL INLET SEDIMENT PROTECTION. REFER TO DETAIL 4/C500.
4. APPROXIMATE LOCATION OF TEMPORARY CONTAINED CONCRETE WASH OUT BIN. REFER TO THE MINNESOTA'S NPDES/SDS GENERAL STORMWATER PERMIT FOR CONSTRUCTION ACTIVITY FOR MORE DETAILS. SELF CONTAINED CONCRETE WASHOUTS ON CONCRETE DELIVERY TRUCKS IS AN ACCEPTABLE ALTERNATIVE TO ON-SITE CONTAINMENT.
5. CONTRACTOR SHALL VERIFY PROPOSED GRADE WILL REMAIN BELOW CONCRETE FOUNDATION FOR LIGHT POLE. CONTACT CIVIL ENGINEER WITH FINDINGS.

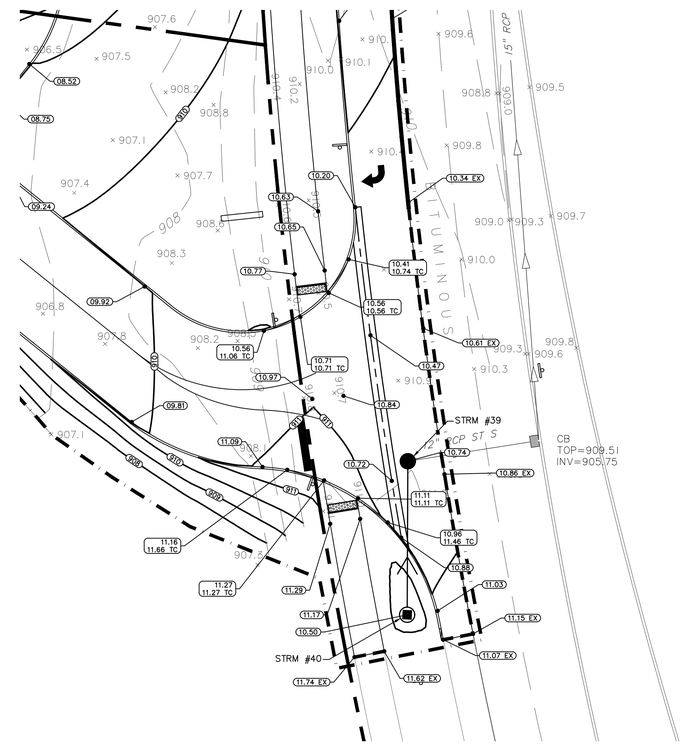

2 C200 DRIVE ENTRANCE GRADING DETAIL
1" = 20'

OWNER:
PINPOINT
Contact: Mike Breese
Phone: 612-978-3688
Email: mike@pinpointeg.com

little box
Address: 2744 Lyndale Ave S
Minneapolis, MN 55408
Phone: 612-804-6314
Email: jnelson@littleboxinc.com

CIVIL & STRUCTURAL:
BKBM ENGINEERS
Address: 6120 Earle Brown Dr. Ste 700
Minneapolis, MN 55430
Civil Phone: 763-843-0427
Structure Phone: 763-843-0443
BKBM Project No. 23169.50

MEP:
EEA ERICKSEN ELLISON and Associates Inc.
Address: 305 2nd St NW Suite 105
New Brighton, MN 55112
Phone: 651-632-2300

LANDSCAPE:
DF/ DAMON FARBER
LANDSCAPE ARCHITECTS
Address: 310 S 4th Ave. Ste 7050
Minneapolis, MN 55415
Phone: 763-257-7928

I hereby certify that this plan, specification or report was prepared by me or under my direct supervision and that I am a duly Licensed PROFESSIONAL ENGINEER *under the laws of the State of MN*

Kevin A. Bohl

License Number: 52209 Date: 07/12/2023

SOUTH SIDE ENTERTAINMENT DISTRICT

A Development By:
PinPoint Equity Group

NO	DESCRIPTION	DATE

P

PROJ NO	
DATE	2023/07/12
DRAWN BY	WH
CHECK BY	NPA

GRADING, DRAINAGE, AND EROSION CONTROL PLAN

C200

STANDARD OPERATING PROCEDURE (S.O.P.) FOR:
AMENDED SOIL QUALITY AND DEPTH TEST

Coon Creek Watershed District

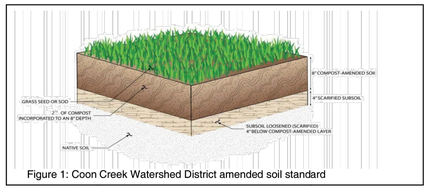

Figure 1: Coon Creek Watershed District amended soil standard

The main conditions to be confirmed are:

1. Provision of eight (8) inches of compost amended soil or imported topsoil.
2. Four (4) inches of scarified (loosened) subsoil below the topsoil layer (for a total uncompacted depth of 12 inches).
3. Grass seed or sod.

SITE INSPECTION SUPPLIES: 1.) Sturdy shovel, 2.) Tape measure or 12" ruler, 3.) Rod Penetrometer (see Step 4 for details)

The following steps may be completed at multiple visits as a project progresses or in one final project approval inspection:

Step 1: Compare site conditions with the approved Plan Set.

Make sure site conditions match these details:

-Soil amendment areas match approved drawings.

-Areas with amended soils have been fenced off during construction to prevent soil compaction.

Step 2: Inspect delivery tickets for compost and topsoil.

Permitee must provide original delivery tickets for all soil and compost products stating the following information:

-Soil specification stating that the soil consists of 20-25% compost by volume or soil test showing 5% organic matter by loss-on-ignition test.

-Total quantities for each soil product and compost.

-Product descriptions and sources.

Step 3: Verify depth of amended soils and scarification.

Use a shovel to dig at least **one test hole per acre** to verify eight inch topsoil depth, incorporation of amendments, and four inches of uncompacted soil.

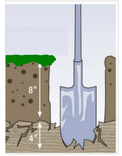

-The top eight inches of soil should be easy to dig using a garden spade driven solely by your weight. The soil should be darker than the unamended soil below, and particles of added compost (organic matter) are likely to be visible. Soil that requires vigorous chipping with the shovel to penetrate does not meet the requirement.

-The next four-inch depth of soil should be loose enough to penetrate with the shovel.

Step 4: Check soil depth in several spots.

Use a simple "rod penetrometer" See illustration at right) to confirm that the soil is uncompacted twelve inches deep at **ten locations per acre - with a minimum of ten on smaller sites**. Additional test locations are encouraged.

The rod penetrometer should enter the soil 12 in. deep, driven solely by the inspector's weight. Irregular scarification or rocks in the lower layer may require probing a few spots at each location to reach the full depth.

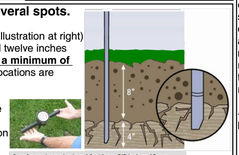

A rod penetrometer is a 4 foot long, 3/8 inch or 10 mm diameter stainless steel rod with a 90 degree bend 5 inches form the top to make a handle, and a 30 degree bevel cut 1/8 inch or 3 mm into the side of the tip.

GRADING NOTES:

1. THE CONTRACTOR SHALL VISIT THE SITE, REVIEW ALL CONSTRUCTION DOCUMENTS, AND FIELD VERIFY THE EXISTING CONDITIONS PRIOR TO BIDDING. NO ADDITIONAL COMPENSATION WILL BE GIVEN FOR WORK THAT COULD HAVE BEEN IDENTIFIED BY A SITE VISIT OR CONSTRUCTION DOCUMENT REVIEW.
2. THE BACKGROUND INFORMATION WAS PREPARED BY SUNDE LAND SURVEYING, (952) 881-2455.
3. IT IS THE CONTRACTOR'S RESPONSIBILITY TO ASCERTAIN THE LOCATION OF ALL EXISTING UTILITIES. THE CONTRACTOR SHALL VERIFY THE LOCATION, ELEVATION AND MARK ALL EXISTING UTILITIES 48 HOURS BEFORE CONSTRUCTION STARTS. THE ENGINEER, ARCHITECT, OR OWNER DOES NOT GUARANTEE THAT ALL THE UTILITIES ARE MAPPED, OR, IF MAPPED, ARE SHOWN CORRECTLY. CONTACT GOPHER STATE ONE CALL AT 651-454-0002 FOR FIELD LOCATING EXISTING UTILITIES. CONTACT UTILITY OWNER IF DAMAGE OCCURS DUE TO CONSTRUCTION.
4. PROTECT ALL EXISTING STRUCTURES AND UTILITIES WHICH ARE NOT SCHEDULED FOR REMOVAL.
5. NOTIFY CITY BUILDING INSPECTOR BEFORE TRENCHING AND EXCAVATION WORK COMMENCES. THE CONTRACTOR SHALL OBTAIN ALL APPLICABLE PERMITS PRIOR TO START OF CONSTRUCTION.
6. ALL SPOT ELEVATIONS SHOWN As 09.00, FOR EXAMPLE, ARE TO BE UNDERSTOOD TO MEAN 909.00.
7. ALL SPOT ELEVATIONS ALONG THE CURB-LINE INDICATE THE ELEVATION OF THE GUTTER, UNLESS NOTED OTHERWISE.
8. NO LANDSCAPED SLOPES ARE TO EXCEED 3:1 (3 FEET HORIZONTAL TO 1 FOOT VERTICAL) UNLESS NOTED OTHERWISE.
9. ACCESSIBLE PARKING AREAS SHALL NOT HAVE SLOPES IN ANY DIRECTION THAT EXCEED 2%.
10. PROVIDE POSITIVE DRAINAGE FROM BUILDINGS AT ALL TIMES.
11. **UPON COMPLETION OF THE GRADING AND UTILITY WORK, THE CONTRACTOR SHALL CERTIFY THAT ALL GRADING AND UTILITY WORK WAS PERFORMED IN ACCORDANCE WITH THE APPROVED GRADING AND UTILITY PERMITS. AN AS-BUILT GRADING AND UTILITY PLAN SHALL BE PERFORMED BY A REGISTERED LAND SURVEYOR HIRED BY THE CONTRACTOR. SURVEY SHALL BE PROVIDED TO CIVIL ENGINEER.**
12. PRIOR TO ISSUANCE OF BUILDING PERMITS, ALL NECESSARY EROSION CONTROL DEVICES MUST BE IN PLACE AND FUNCTIONING. THE CITY AND COONCREEK WATERSHED DISTRICT WILL INSPECT THE SITE TO DETERMINE ITS SUITABILITY FOR BUILDING ACTIVITIES. IF THE PUBLIC UTILITIES HAVE NOT BEEN INSTALLED AT THIS POINT, IT MAY BE NECESSARY TO WITHHOLD BUILDING PERMITS FOR VARIOUS LOTS TO ALLOW THE CONTRACTOR ADEQUATE SPACE TO PERFORM THIS WORK.
13. ALL DEBRIS CREATED IN THE PROCESS OF CLEARING AND GRADING THE SITE SHALL BE REMOVED FROM THE SITE. THIS INCLUDES TREES AND SHRUBS. UNDER NO CIRCUMSTANCES SHALL THIS TYPE OF MATERIAL BE BURIED OR BURNED ON THE SITE.
14. THE CONTRACTOR MAY STRIP AND SALVAGE TOPSOIL FOR POTENTIAL RE-SPREADING ON THE SITE, IF APPROVED BY THE LANDSCAPE ARCHITECT AND/OR SPECIFICATIONS. EIGHT INCHES OF TOPSOIL - AFTER COMPACTION - SHALL BE RE-SPREAD PRIOR TO SEEDING AND MULCHING. TOPSOIL SHALL AMENDED AS DETAILED IN THE STANDARD OPERATING PROCEDURE FOR: AMENDED SOIL QUALITY AND DEPTH TEST. PRIOR TO PLACEMENT OF TOPSOIL SUBGRADE SOIL SHALL BE SCARIFIED TO A DEPTH OF 4-INCHES. EXCESS TOPSOIL MAY BE REMOVED FROM THE SITE PROVIDED THERE IS ADEQUATE TOPSOIL REMAINING TO PROPERLY FINISH THE SITE AS NOTED ABOVE. THE TOPSOIL STRIPPING, STOCKPILING, AND RE-SPREADING SHALL BE DONE IN ACCORDANCE WITH, AND NOTED ON, THE APPROVED GRADING PLAN AND SPECIFICATIONS. THE CONTRACTOR SHALL REFER TO THE LANDSCAPE DRAWINGS AND SPECIFICATIONS FOR ANY SPECIAL TOPSOIL OR PLANTING REQUIREMENTS.
15. ALL GRADING OPERATIONS SHALL BE CONDUCTED IN A MANNER TO MINIMIZE THE POTENTIAL FOR SITE EROSION. EROSION CONTROL MEASURES SHALL BE INSTALLED TO PREVENT SEDIMENT FROM RUNNING OFF ONTO ADJACENT PROPERTIES. ANY DAMAGE TO ADJACENT PROPERTIES MUST BE CORRECTED AND RESTORED AS SOON AS PERMISSION IS GRANTED FROM THE ADJACENT PROPERTY OWNER(S).
16. IF CONSTRUCTION OF THE SITE WORK PROCEEDS THROUGH THE WINTER MONTHS, ANY DISTURBED AREAS OUTSIDE THE BUILDING FOOTPRINTS ARE TO BE MINIMALLY STABILIZED PRIOR TO MARCH 1, AS FOLLOWS: AREAS PLANNED TO RECEIVE PAVEMENTS ARE TO HAVE CLASS 5 BASE INSTALLED; ALL OTHER DISTURBED AREAS ARE TO BE SEEDED, STRAW MULCH PLACED, AND DISC-ANCHORED.
17. WINTER MULCHING:
    - 17.A. SNOW MULCHING SHALL BE DEFINED AS MULCH MATERIAL SPREAD OVER THE TOP OF SNOW SO THAT THE MULCH MELTS THROUGH THE SNOW AND STICKS TO THE EXPOSED SOILS.
    - 17.B. FROZEN GROUND MULCHING SHALL BE DEFINED AS MULCH MATERIAL SPREAD OVER FROZEN GROUND. MULCH MATERIALS THAT DO NOT REQUIRE DISC-ANCHORING INTO THE SOIL MAY BE PLACED WITHOUT MODIFICATION. MULCH MATERIALS THAT REQUIRE DISC-ANCHORING MAY BE ANCHORED WITH HYDRAULIC SOIL STABILIZERS OR MAY BE FROZEN TO THE SOIL BY APPLYING WATER AT A RATE OF 2000 GALLONS PER ACRE OVER THE MULCH AS A SUBSTITUTION FOR DISC-ANCHORING.
18. THE CONTRACTOR SHALL LIMIT THE DISTURBED AREA AS MUCH AS POSSIBLE.

EROSION CONTROL NOTES:

1. ALL EROSION CONTROL FACILITIES SHALL BE INSTALLED PRIOR TO ANY SITE GRADING OPERATIONS. THE CITY ENGINEERING DEPARTMENT AND COON CREEK WATERSHED DISTRICT MUST BE NOTIFIED UPON COMPLETION OF THE INSTALLATION OF THE REQUIRED EROSION CONTROL FACILITIES AND PRIOR TO ANY GRADING OPERATION BEING COMMENCED. THE CONTRACTOR IS RESPONSIBLE FOR SCHEDULING A PRE-CONSTRUCTION GRADING MEETING ON-SITE WITH THE CITY AND COON CREEK WATERSHED DISTRICT. IF DAMAGED OR REMOVED DURING CONSTRUCTION, ALL EROSION CONTROL FACILITIES SHALL BE RESTORED AND IN PLACE AT THE END OF EACH DAY.
2. ANY EROSION CONTROL FACILITIES DEEMED NECESSARY BY THE CITY OR COON CREEK WATERSHED DISTRICT; BEFORE, DURING OR AFTER THE GRADING ACTIVITIES, SHALL BE INSTALLED AT THEIR REQUEST.
3. NO DEVIATIONS SHALL BE MADE FROM THE ELEVATIONS SHOWN ON THE APPROVED GRADING PLAN WITHOUT PRIOR APPROVAL FROM THE CIVIL ENGINEER.
4. FOR SITES GREATER THAN 1.0 ACRE, AS REQUIRED BY THE MPCA PERMIT REQUIREMENTS, THE PERMIT APPLICANT MUST KEEP AN EROSION CONTROL INSPECTION LOG. INSPECTION MUST BE MADE ONCE EVERY SEVEN DAYS AND WITHIN 24 HOURS AFTER EVERY RAIN EVENT. THE INSPECTION RECORD MUST BE MADE AVAILABLE TO THE CITY AND COON CREEK WATERSHED DISTRICT WITHIN 24 HOURS OF REQUEST.
5. FLOWS FROM DIVERSION CHANNELS OR PIPES (TEMPORARY OR PERMANENT) SHALL BE ROUTED TO SEDIMENTATION BASINS OR APPROPRIATE ENERGY DISSIPATERS TO PREVENT TRANSPORT OF SEDIMENT TO OUTFLOW TO LATERAL CONVEYORS AND TO PREVENT EROSION AND SEDIMENTATION WHEN RUNOFF FLOWS INTO THESE CONVEYORS.
6. SITE ACCESS ROADS SHALL BE GRADED OR OTHERWISE PROTECTED WITH SILT FENCES, DIVERSION CHANNELS, OR DIKES AND PIPES TO PREVENT SEDIMENT FROM EXITING THE SITE VIA THE ACCESS ROADS. SITE-ACCESS ROADS/DRIVEWAYS SHALL BE SURFACED WITH CRUSHED ROCK WHERE THEY ADJOIN EXISTING PAVED ROADWAYS.
7. SOILS TRACKED FROM THE SITE BY MOTOR VEHICLES OR EQUIPMENT SHALL BE CLEANED DAILY FROM PAVED ROADWAY SURFACES, OR MORE FREQUENTLY IF REQUESTED BY CITY OR COON CREEK WATERSHED DISTRICT, THROUGHOUT THE DURATION OF CONSTRUCTION.
8. DUST CONTROL MEASURES SHALL BE PERFORMED PERIODICALLY WHEN CONDITIONS REQUIRE AND/OR AS DIRECTED BY THE CITY OR COON CREEK WATERSHED DISTRICT .
9. ALL EROSION CONTROL MEASURES SHALL BE USED AND MAINTAINED FOR THE DURATION OF SITE CONSTRUCTION. IF CONSTRUCTION OPERATIONS OR NATURAL EVENTS DAMAGE OR INTERFERE WITH THESE EROSION CONTROL MEASURES, THEY SHALL BE RESTORED TO SERVE THEIR INTENDED FUNCTION AT THE END OF EACH DAY OR AS SOON AS FIELD CONDITIONS ALLOW ACCESS.
10. ALL AREAS DISTURBED DURING CONSTRUCTION SHALL BE RESTORED AS SOON AS POSSIBLE. ANY AREAS WHICH HAVE BEEN FINISHED GRADED OR AREAS THAT HAVE BEEN DISTURBED AND FOR WHICH GRADING OR SITE BUILDING CONSTRUCTION OPERATIONS ARE NOT ACTIVELY UNDERWAY SHALL BE SEEDED AND MULCHED AS SET FORTH IN THE FOLLOWING PARAGRAPHS WITHIN 7 DAYS:
    - A. ALL SEEDED AREAS SHALL BE EITHER MULCHED AND DISC-ANCHORED OR COVERED BY FIBROUS BLANKETS TO PROTECT SEEDS AND LIMIT EROSION. TEMPORARY STRAW MULCH SHALL BE DISC-ANCHORED AND APPLIED AT A UNIFORM RATE OF NOT LESS THAN TWO TONS PER ACRE AND NOT LESS THAN 80% COVERAGE.
    - B. IF THE GRADED AREA IS ANTICIPATED TO BE RE-DISTURBED/DEVELOPED WITHIN SIX MONTHS, PROVIDE A TEMPORARY VEGETATIVE COVER CONSISTING OF MINNESOTA DEPARTMENT OF TRANSPORTATION (MNDOT) SEED MIXTURE 21-111 (OATS), OR 21-112 (WINTER WHEAT), AT A RATE OF 100 POUNDS PER ACRE.
    - C. IF GRADED AREA WILL NOT BE DEVELOPED FOR A PERIOD GREATER THAN SIX MONTHS, PROVIDE A SEMI-PERMANENT VEGETATIVE COVER OF SEED MIXTURE MNDOT 22-112 AT A RATE OF 40 POUNDS PER ACRE.
    - D. GRADING BONDS OR THE EQUIVALENT SECURITIES SHALL BE RETAINED UNTIL TURF HAS GERMINATED AND SURVIVED A 60-DAY GROWING PERIOD.
    - E. REFER TO LANDSCAPE PLANS FOR PERMANENT TURF RESTORATION.
    - F. WHENEVER OTHER EROSION AND SEDIMENT CONTROL PRACTICES ARE INADEQUATE, TEMPORARY ON-SITE SEDIMENT BASINS THAT CONFORM TO THE CRITERIA FOR ON-SITE DETENTION BASINS SHALL BE PROVIDED.
    - G. MULCH, HYDROMULCH, AND TACKIFIERS MAY NOT BE USED FOR STABILIZATION IN SWALES OR DRAINAGE DITCHES UNLESS THE LONGITUDINAL SLOPE IS LESS THAN 2 PERCENT.
    - H. RUNOFF SHALL BE PREVENTED FROM ENTERING ALL STORM SEWER CATCH BASINS PROVIDING THEY ARE NOT NEEDED DURING CONSTRUCTION. WHERE STORM SEWER CATCH BASINS ARE NECESSARY FOR SITE DRAINAGE DURING CONSTRUCTION, SEDIMENT PROTECTION DEVICES AS DETAILED SHALL BE INSTALLED AND MAINTAINED AROUND ALL CATCH BASINS UNTIL THE TRIBUTARY AREA TO THE CATCH BASIN IS RESTORED.
11. GRADING ACTIVITIES PROPOSED TO BEGIN AFTER OCTOBER 15 WILL REQUIRE AN APPROVED PHASING SCHEDULE. THE AREA OF LAND THAT THE CITY WILL ALLOW TO BE DISTURBED AT THIS TIME OF YEAR WILL BE SEVERELY LIMITED. THE CITY WILL ALSO REQUIRE ADDITIONAL EROSION CONTROL DEVISES, I.E., TEMPORARY SEDIMENT BASINS, DORMANT SEEDING AND HIGH RATES OF APPLICATION OF BOTH SEED AND MULCH.
12. TO MINIMIZE EROSION, ALL 3:1 SLOPES SHALL BE COVERED WITH A MN/DOT 3885 CATEGORY 20 STRAW EROSION CONTROL BLANKETS OR STAKED SOD.
13. ACCUMULATION OF ALL SEDIMENT OCCURRING IN STORM SEWERS SHALL BE REMOVED PRIOR TO, DURING AND AFTER COMPLETION OF GRADING ACTIVITIES.
14. EROSION CONTROL ITEMS AND DEVICES SHALL BE REMOVED ONLY AFTER THE AREA HAS RECEIVED FINAL STABILIZATION OR AS DIRECTED BY THE CITY AND/OR COON CREEK WATERSHED DISTRICT.

OWNER:
PINPOINT
Contact: Mike Breese
Phone: 612-978-3688
Email: mike@pinpointeg.com

little box
Address: 2744 Lyndale Ave S
Minneapolis, MN 55408
Phone: 612-804-6314
Email: jnelson@littleboxinc.com

CIVIL & STRUCTURAL:
BKBM ENGINEERS
Address: 6120 Earle Brown Dr. Ste 700
Minneapolis, MN 55430
Civil Phone: 763-843-0427
Structure Phone: 763-843-0443
BKBM Project No. 23169.50

MEP:
EEA ERICKSEN ELLISON and Associates Inc.
Address: 305 2nd St NW Suite 105
New Brighton, MN 55112
Phone: 651-632-2300

LANDSCAPE:
DF/ DAMON FARBER LANDSCAPE ARCHITECTS
Address: 310 S 4th Ave. Ste 7050
Minneapolis, MN 55415
Phone: 763-257-7928

I hereby certify that this plan, specification or report was prepared by me or under my direct supervision and that I am a duly Licensed PROFESSIONAL ENGINEER *under the laws of the State of MN*

Kevin A. Bohl

License Number: 52209 Date: 07/12/2023

SOUTH SIDE ENTERTAINMENT DISTRICT

A Development By:
PinPoint Equity Group

NO	DESCRIPTION	DATE

P

PROJ NO	
DATE	2023/07/12
DRAWN BY	WH
CHECK BY	NPA

GRADING NOTES AND EROSION CONTROL NOTES

C201

NOTE:
FOR WORK WITHIN ANOKA COUNTY R/W: THE 2020 EDITION OF THE MINNESOTA DEPARTMENT OF TRANSPORTATION 'STANDARD SPECIFICATIONS FOR CONSTRUCTION' AND THE 'SUPPLEMENTAL SPECIFICATIONS DATED SEPTEMBER 2022 SHALL GOVERN.

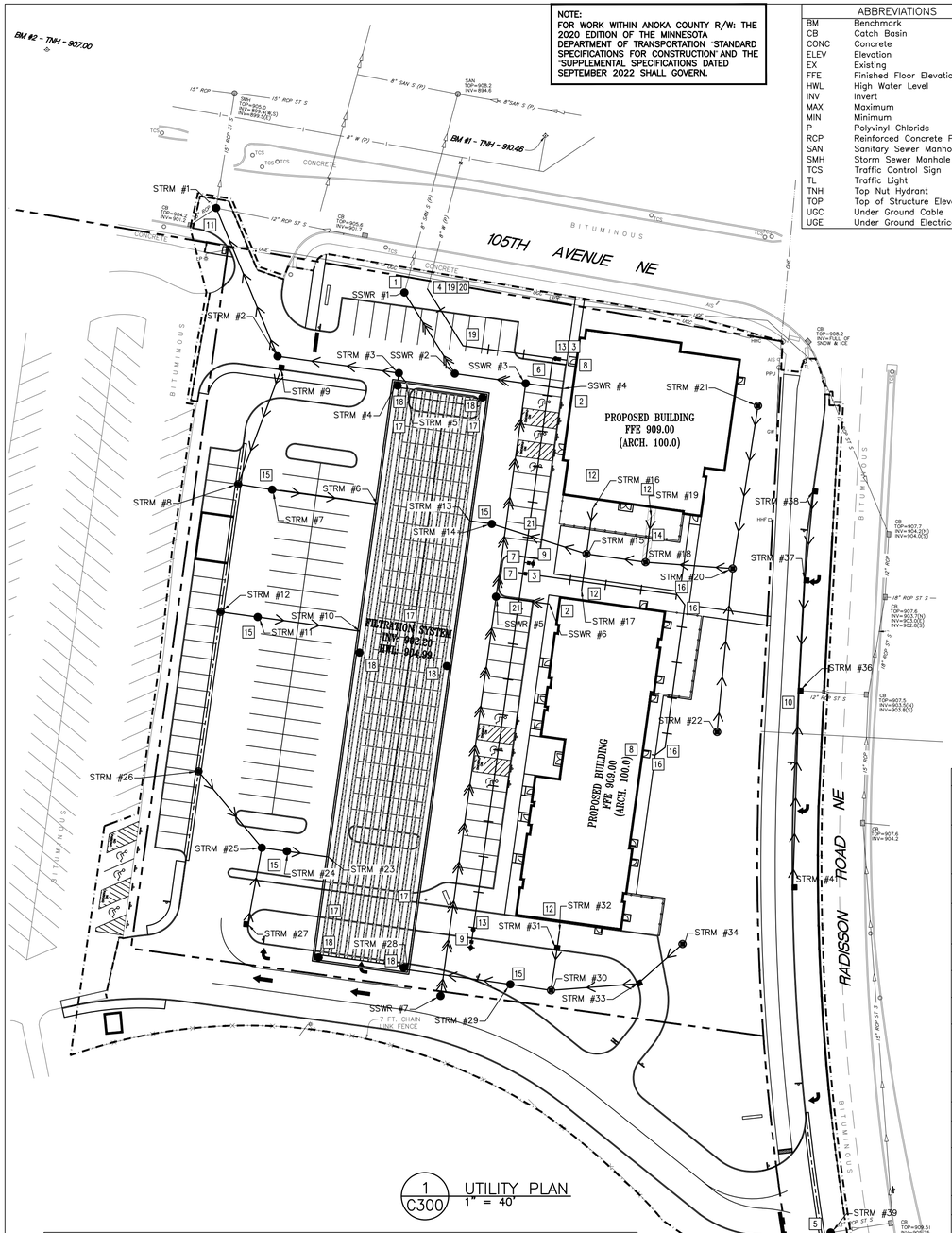

1 C300 UTILITY PLAN
1" = 40'

SANITARY SEWER TABLE					
STRUCTURE ID	STRUCTURE DIMENSION (INCHES)	NEENAH CASTING TYPE	RIM ELEVATION	INVERT ELEVATION(S)	PIPE LENGTH, DIAMETER, SLOPE & NEXT UPSTREAM STRUCTURE
SSWR #1	48" MH	R-1733	907.48	N = 895.73 SE = 895.83	-------- 53 L.F. OF 8" PVC @ 1.05%, SSWR #2
SSWR #2	48" MH	R-1733	907.72	NW = 896.39 E = 896.49	-------- 40 L.F. OF 8" PVC @ 1.05%, SSWR #3
SSWR #3	48" MH	R-1733	908.56	W = 896.91 E = 897.01 S = 897.01	-------- 21 L.F. OF 6" SCH 40 PVC @ 2.10%, SSWR #4 120 L.F. OF 8" PVC @ 1.05%, SSWR #5
SSWR #4	SERVICE CONNECTION	NA		W = 897.45	--------
SSWR #5	48" MH	R-1733	908.00	N = 898.27 E = 898.37 S = 898.37	-------- 30 L.F. OF 6" SCH 40 PVC @ 2.10%, SSWR #6 225 L.F. OF 8" PVC @ 1.05%, SSWR #7
SSWR #6	SERVICE CONNECTION	NA		W = 899.00	--------
SSWR #7	48" MH	R-1733	907.51	N = 900.74	--------

ABBREVIATIONS

BM	Benchmark
CB	Catch Basin
CONC	Concrete
ELEV	Elevation
EX	Existing
FFE	Finished Floor Elevation
HWL	High Water Level
INV	Invert
MAX	Maximum
MIN	Minimum
P	Polyvinyl Chloride
RCP	Reinforced Concrete Pipe
SAN	Sanitary Sewer Manhole
SMH	Storm Sewer Manhole
TCS	Traffic Control Sign
TL	Traffic Light
TNH	Top Nut Hydrant
TOP	Top of Structure Elevation
UGC	Under Ground Cable
UGE	Under Ground Electrical

UTILITY NOTES:

1. CONTRACTOR SHALL FOLLOW ALL CITY OF BLAINE STANDARDS AND SPECIFICATIONS AND ANOKA COUNTY STANDARDS AND SPECIFICATIONS WHEN WORKING IN PUBLIC RIGHT-OF-WAY.
2. COORDINATE SERVICE CONNECTION LOCATIONS AT THE BUILDING WITH THE MECHANICAL CONTRACTOR PRIOR TO CONSTRUCTION. NO ADDITIONAL COMPENSATION WILL BE ALLOWED FOR UNCOORDINATED WORK.
3. COORDINATE UTILITY INSTALLATION WITH STRUCTURAL PRIOR TO START OF CONSTRUCTION. UTILITIES SHALL NOT BE INSTALLED WITHIN THE ZONE OF INFLUENCE OF ANY STRUCTURAL ELEMENTS. NO ADDITIONAL COMPENSATION WILL BE PROVIDED FOR UNCOORDINATED WORK.
4. ALL SEWER SERVICE CONNECTIONS WITH LESS THAN 5 FEET OF COVER OVER THE TOP OF PIPE SHALL BE INSULATED. INSULATION SHALL BE INSTALLED FROM THE CONNECTION OF THE SERVICE AT THE BUILDING TO THE POINT WHICH THE SERVICE ATTAINS 5 FEET OF COVER. CONTRACTOR SHALL OBTAIN WRITTEN PERMISSION FROM ARCHITECT OR ENGINEER PRIOR TO INSTALLATION OF INSULATION.
5. PROTECT ALL EXISTING STRUCTURES AND UTILITIES WHICH ARE NOT SCHEDULED TO BE REMOVED.
6. ALL SEWER AND WATER CROSSINGS SHALL HAVE A MINIMUM VERTICAL SEPARATION OF 1.5 FEET AND HORIZONTAL SEPARATION OF 10 FEET. FOLLOW ALL HEALTH DEPARTMENT AND CITY OF BLAINE AND ANOKA COUNTY STANDARDS.
7. ALL WATER MAINS SHALL BE DUCTILE IRON PIPE, CLASS 52, UNLESS NOTED OTHERWISE.
8. ALL WATER MAIN SHALL HAVE A MINIMUM DEPTH OF COVER OF 7.5 FEET OVER TOP OF WATER MAIN.
9. PROVIDE THRUST BLOCKING ON ALL WATER MAIN PER CITY OF BLAINE. PROVIDE MECHANICAL JOINT RESTRAINTS ON ALL BENDS, VALVES, TEES, PLUGS, AND HYDRANT LEADS.
10. SANITARY SEWER PIPING SHALL BE SDR 35 PVC UNLESS NOTED OTHERWISE. ALL SANITARY SEWER PIPE THAT IS EXTENDED TO THE BUILDING FOR SERVICES OR CROSSES WATER LINES SHALL BE SCHEDULE 40 PVC.
11. STORM SEWER PIPING SHALL BE REINFORCED CONCRETE PIPE (RCP), UNLESS NOTED OTHERWISE. ALL 12-INCH THROUGH 18-INCH RCP STORM SEWER PIPE SHALL BE CLASS 5. RCP PIPE LARGER THAN 18-INCH SHALL BE CLASS 3 UNLESS NOTED OTHERWISE. ALL STORM SEWER PIPE THAT IS EXTENDED TO THE BUILDING FOR ROOF DRAIN SERVICES OR CROSSES WATER LINES SHALL BE SCHEDULE 40 PVC.
12. CONTRACTORS SHALL COORDINATE ALL WORK WITH GAS, ELECTRIC, TELEVISION AND TELEPHONE COMPANIES PRIOR TO START OF CONSTRUCTION.
13. WHERE PROPOSED GRADE OVER EXISTING SMALL UTILITIES IS PROPOSED TO BE LOWERED, CONTRACTOR SHALL COORDINATE WITH UTILITY OWNER FOR THE LOWERING OF THE EXISTING UTILITY TO PROVIDE THE MINIMUM COVER REQUIRED AT NO ADDITIONAL COST TO THE OWNER.
14. ALL PORTIONS OF THE STORM SEWER SYSTEM LOCATED WITHIN 10-FEET OF THE BUILDING OR WATER SERVICE LINE SHALL BE TESTED IN ACCORDANCE WITH MN PLUMBING CODE. PIPING MATERIAL SHALL BE SCHEDULE 40 PVC.
15. ALL JOINTS AND CONNECTIONS IN THE STORM SEWER SYSTEM SHALL BE GAS TIGHT OR WATER TIGHT IN ACCORDANCE TO MN PLUMBING CODE. APPROVED RESILIENT RUBBER JOINTS MUST BE USED TO MAKE WATER TIGHT CONNECTIONS TO MANHOLES, CATCH BASINS, AND OTHER STRUCTURES. RESILIENT WATER-STOP GROUTING RINGS ARE AN ACCEPTABLE ALTERNATIVE. CEMENT MORTAR JOINTS ARE PERMITTED ONLY FOR REPAIRS AND CONNECTIONS OF EXISTING LINES CONSTRUCTED WITH SUCH JOINTS.

UTILITY NOTES FOR WORK IN PUBLIC RIGHT-OF-WAY:

1. FOLLOW ALL CITY OF BLAINE AND ANOKA COUNTY STANDARDS AND SPECIFICATIONS.
2. PRIOR TO CONSTRUCTION, CONTRACTORS ARE TO COORDINATE ALL WORK WITHIN RIGHT-OF-WAY AND OBTAIN ALL APPLICABLE PERMITS.

KEYED NOTES

KEYED NOTES ARE DENOTED BY [NO] ON PLAN.

1. CONTRACTOR SHALL INSTALL MANHOLE IN LINE WITH EXISTING 8-INCH PVC PIPE. REFER TO SANITARY SEWER TABLE FOR INVERT. PRIOR TO INSTALLATION OF MANHOLE, CONTRACTOR SHALL CONTACT CIVIL ENGINEER WITH EXACT INVERT ELEVATION.
2. LOCATION OF PROPOSED SANITARY SEWER SERVICE. REFER TO SANITARY SEWER TABLE FOR INVERT ELEVATIONS AND PIPE SIZES. STUB TO WITHIN 5-FEET OF PROPOSED BUILDING. **COORDINATE EXACT LOCATION AND INVERT ELEVATION WITH MECHANICAL CONTRACTOR PRIOR TO THE START OF CONSTRUCTION.**
3. INSTALL 6-INCH GATE VALVE.
4. REMOVE PLUG AND CONNECT TO EXISTING 8-INCH WATER STUB FOR PROPOSED PIPE CONNECTION.
5. CONTRACTOR SHALL INSTALL MANHOLE IN LINE WITH EXISTING 12-INCH RCP PIPE. REFER TO STORM SEWER TABLE FOR APPROXIMATE INVERT. PRIOR TO INSTALLATION OF MANHOLE, CONTRACTOR SHALL CONTACT CIVIL ENGINEER WITH EXACT INVERT ELEVATION.
6. INSTALL 8-INCH BY 8-INCH TEE.
7. INSTALL 8-INCH BY 6-INCH TEE.
8. STUB 6-INCH COMBINED DOMESTIC WATER LINE AND FIRE PROTECTION LINE TO WITHIN 5-FEET OF THE PROPOSED BUILDING. TOP OF WATER SERVICE SHALL BE 7.5 FEET BELOW FINISHED GRADE AT THE PROPOSED CONNECTION POINT. COORDINATE EXACT LOCATION WITH MECHANICAL AND STRUCTURAL PLANS PRIOR TO THE START OF CONSTRUCTION.
9. INSTALL FIRE HYDRANT AND GATE VALVE. REFER TO DETAILS 1/C501 AND 2/C501.
10. CONTRACTOR SHALL INSTALL MANHOLE IN LINE WITH EXISTING 12-INCH RCP PIPE. REFER TO STORM SEWER TABLE FOR INVERT. PRIOR TO INSTALLATION OF MANHOLE, CONTRACTOR SHALL CONTACT CIVIL ENGINEER WITH EXACT INVERT ELEVATION.
11. INSTALL MANHOLE IN LINE WITH EXISTING STORM SEWER PIPES. REFER TO STORM SEWER TABLE FOR INVERTS.
12. LOCATION OF PROPOSED ROOF DRAIN LEAD. REFER TO STORM SEWER TABLE FOR INVERT ELEVATIONS AND PIPE SIZES. **COORDINATE EXACT LOCATION AND INVERT ELEVATION WITH MECHANICAL CONTRACTOR PRIOR TO THE START OF CONSTRUCTION.**
13. INSTALL 8-INCH BY 6-INCH REDUCER.
14. INSTALL PIPE INSULATION. REFER TO DETAIL 8/C500.
15. INSTALL 2015-4-C INLINE HYDRODYNAMIC SEPARATOR. REFER TO DETAIL 1/C504.
16. INSTALL 6-INCH DIP 45° BEND.
17. INSTALL FILTRATION SYSTEMS PER DETAIL 4/C502. FILTRATION SYSTEM SHALL PROVIDE THE FILTRATION VOLUME AND TOTAL STORAGE VOLUME NOTED ON DETAIL 4/C502 AND MEET THE RATE CONTROL REQUIREMENTS INDICATED ON SHEET C600. SYSTEM FOOTPRINT IS BASED ON CMP DESIGN. ANY ALTERNATE DESIGNS MUST BE APPROVED BY CIVIL ENGINEER PRIOR TO CONSTRUCTION. REFER TO AS-BUILT NOTE FOR REQUIRED AS-BUILT INFORMATION FOR PROPOSED STORMWATER MANAGEMENT SYSTEM.
18. INSTALL ACCESS RISER PER MANUFACTURER'S RECOMMENDATIONS.
19. INSTALL 8-INCH DIP 45° BEND.
20. INSTALL 8-INCH DIP 12.25° BEND.
21. DEFLECT 8-INCH WATERMAIN BELOW SEWER. REFER TO DETAIL 6/C501.

N

40' 20' 0 40' 80'
SCALE 1" = 40'

PROPOSED PLAN SYMBOLS

- CONSTRUCTION LIMITS
- PROPERTY LINE
- SAWCUT LINE (APPROX.)
- SANITARY SEWER
- WATER PIPE
- STORM SEWER
- FIRE HYDRANT
- GATE VALVE
- CATCH BASIN
- MANHOLE
- PIPE INSULATION

*NOTE: CONSTRUCTION LIMITS ARE ANTICIPATED TO BE PROPERTY LINE UNLESS OTHERWISE SHOWN.

AS-BUILT NOTE:

AN AS-BUILT SURVEY OF ALL STORMWATER BMPS (FILTRATION SYSTEMS, OUTLET STRUCTURES, SUMP CATCH BASINS, ETC...) SHALL BE SUBMITTED TO COON CREEK WATERSHED DISTRICT WITHIN 1 WEEK OF INSTALLATION. THE AS-BUILT SURVEY SHALL INCLUDE THE FILTRATION TANKS LAYOUT, TANK INVERT, AND DRAIN TILE INVERT ELEVATION, FOR VERIFICATION THAT THE SYSTEM WAS INSTALLED PROPERLY.

STORM SEWER TABLE					
STRUCTURE ID	STRUCTURE DIMENSION (INCHES)	NEENAH CASTING TYPE	RIM ELEVATION	INVERT ELEVATION(S)	PIPE LENGTH, DIAMETER, SLOPE & NEXT UPSTREAM STRUCTURE
STRM #1	60" MH	R-1733	904.80	E = 900.74 N = 900.20 SW = 900.30 SE = 900.20	-------- -------- -------- 90 L.F. OF 12" RCP @ 0.16%, STRM #2
STRM #2	48" MH	R-1733	905.63	NW = 900.34 E = 900.34	-------- 68 L.F. OF 12" RCP @ 0.16%, STRM #3
STRM #3	48" MH	R-1733	907.20	W = 900.45 SE = 900.45 S = 903.85	-------- 7 L.F. OF 6" PVC @ 0.00%, STRM #5 5 L.F. OF 12" RCP @ 1.00%, STRM #4
STRM #4	TANK CONNECTION	NA		N = 903.90	--------
STRM #5	DRAIN TILE CONNECTION	NA		NW = 900.45	--------
STRM #6	TANK CONNECTION	NA		W = 902.24	59 L.F. OF 15" RCP @ 0.50%, STRM #7
STRM #7	48" SUMP MH W/ INLINE CDS2015-4-C	R-1733	906.09	E = 902.54 W = 902.54	-------- 19 L.F. OF 15" RCP @ 0.50%, STRM #8
STRM #8	60" CB MH	R-3382	905.61	E = 902.64 N = 902.64	-------- 69 L.F. OF 12" RCP @ 0.50%, STRM #9
STRM #9	24"x36" CB	R-3067	905.73	S = 902.98	--------
STRM #10	TANK CONNECTION	NA		W = 902.24	57 L.F. OF 12" RCP @ 0.50%, STRM #11
STRM #11	48" SUMP MH W/ INLINE CDS2015-4-C	R-1733	906.35	E = 902.53 W = 902.53	-------- 21 L.F. OF 12" RCP @ 0.50%, STRM #12
STRM #12	24"x36" CB	R-3382	905.82	E = 902.64	--------
STRM #13	TANK CONNECTION	NA		E = 902.20	12 L.F. OF 15" RCP @ 0.50%, STRM #14
STRM #14	48" SUMP MH W/ INLINE CDS2015-4-C	R-1733	908.14	W = 902.26 E = 902.26	-------- 56 L.F. OF 15" SCH 40 PVC @ 0.50%, STRM #15
STRM #15	48" CB MH	R-2390	908.32	W = 902.54 N = 902.54 S = 902.54 E = 902.54	-------- 26 L.F. OF 6" PVC @ 2.00%, STRM #16 21 L.F. OF 8" PVC @ 2.00%, STRM #17 33 L.F. OF 15" RCP @ 0.50%, STRM #18
STRM #16	ROOF CONNECTION	NA		S = 903.05	--------
STRM #17	ROOF CONNECTION	NA		N = 902.95	--------
STRM #18	48" CB MH	R-2390	908.32	W = 902.71 N = 902.71 E = 902.71	-------- 26 L.F. OF 6" PVC @ 2.00%, STRM #19 49 L.F. OF 12" RCP @ 0.80%, STRM #20
STRM #19	ROOF CONNECTION	NA		S = 903.22	--------
STRM #20	48" CB MH	R-2390	907.37	W = 903.10 N = 903.10 S = 903.10	-------- 92 L.F. OF 12" RCP @ 1.00%, STRM #21 92 L.F. OF 12" RCP @ 1.00%, STRM #22

STORM SEWER TABLE					
STRUCTURE ID	STRUCTURE DIMENSION (INCHES)	NEENAH CASTING TYPE	RIM ELEVATION	INVERT ELEVATION(S)	PIPE LENGTH, DIAMETER, SLOPE & NEXT UPSTREAM STRUCTURE
STRM #21	27" CB	R-2390	907.48	S = 904.02	--------
STRM #22	27" CB	R-2390	906.93	N = 904.02	--------
STRM #23	TANK CONNECTION	NA			
STRM #24	48" SUMP MH W/ INLINE CDS2015-4-C	R-1733	906.62	E = 902.28 W = 902.28	-------- 14 L.F. OF 18" RCP @ 0.35%, STRM #25
STRM #25	48" MH	R-1733	906.42	E = 902.33 NW = 902.33 S = 902.33	-------- 55 L.F. OF 15" RCP @ 0.68%, STRM #26 43 L.F. OF 15" RCP @ 0.50%, STRM #27
STRM #26	24"x36" CB	R-3382	905.67	SE = 902.71	--------
STRM #27	24"x36" CB	R-3067	905.50	N = 902.55	--------
STRM #28	TANK CONNECTION	NA		E = 902.20	58 L.F. OF 12" SCH 40 PVC @ 0.50%, STRM #29
STRM #29	48" SUMP MH W/ INLINE CDS2015-4-C	R-1733	907.88	W = 902.49 E = 902.49	-------- 23 L.F. OF 12" RCP @ 0.89%, STRM #30
STRM #30	48" CB MH	R-2390	907.12	W = 902.70 N = 902.70 E = 902.70	-------- 23 L.F. OF 12" RCP @ 0.89%, STRM #31 49 L.F. OF 12" RCP @ 1.42%, STRM #33
STRM #31	48" CB MH	R-3067	907.91	S = 902.90 N = 902.90	-------- 10 L.F. OF 8" PVC @ 1.00%, STRM #32
STRM #32	ROOF CONNECTION	NA		S = 903.00	--------
STRM #33	48" CB MH	R-3067	907.28	W = 903.39 NE = 903.45	-------- 33 L.F. OF 12" RCP @ 1.62%, STRM #34
STRM #34	27" CB	R-2390	906.99	SW = 903.99	--------
STRM #36	48" CB MH	MN/DOT 816	908.02	E = 904.29 N = 904.29 S = 904.29	-------- 62 L.F. OF 12" RCP @ 0.50%, STRM #37 110 L.F. OF 12" RCP @ 1.00%, STRM #41
STRM #37	48" CB MH	MN/DOT 816	907.80	S = 904.60 N = 904.60	-------- 50 L.F. OF 12" RCP @ 0.50%, STRM #38
STRM #38	30" CB	MN/DOT 816	907.95	S = 904.85	--------
STRM #39	48" CB MH	MN/DOT 716	910.74	E = 906.14 S = 906.19	-------- 41 L.F. OF 12" RCP @ 2.00%, STRM #40
STRM #40	30" CB	MN/DOT 720	910.50	N = 907.00	--------
STRM #41	30" CB	MN/DOT 816	908.85	N = 905.39	--------

OWNER:
PINPOINT
Contact: Mike Breese
Phone: 612-978-3688
Email: mike@pinpointeg.com

little box
Address: 2744 Lyndale Ave S
Minneapolis, MN 55408
Phone: 612-804-6314
Email: jnelson@littleboxinc.com

CIVIL & STRUCTURAL:
BKBM ENGINEERS
Address: 6120 Earle Brown Dr. Ste 700
Minneapolis, MN 55430
Civil Phone: 763-843-0427
Structure Phone: 763-843-0443
BKBM Project No. 23169.50

MEP:
EEA ERICKSEN ELLISON and Associates Inc.
Address: 305 2nd St NW Suite 105
New Brighton, MN 55112
Phone: 651-632-2300

LANDSCAPE:
DF/ DAMON FARBER LANDSCAPE ARCHITECTS
Address: 310 S 4th Ave. Ste 7050
Minneapolis, MN 55415
Phone: 763-257-7928

I hereby certify that this plan, specification or report was prepared by me or under my direct supervision and that I am a duly Licensed PROFESSIONAL ENGINEER *under the laws of the State of MN*

Kevin A. Bohl
Kevin A. Bohl
License Number: 52209 Date: 07/12/2023

SOUTH SIDE ENTERTAINMENT DISTRICT

A Development By:
PinPoint Equity Group

NO	DESCRIPTION	DATE

P

PROJ NO	
DATE	2023/07/12
DRAWN BY	WH
CHECK BY	NPA

UTILTY PLAN

C300

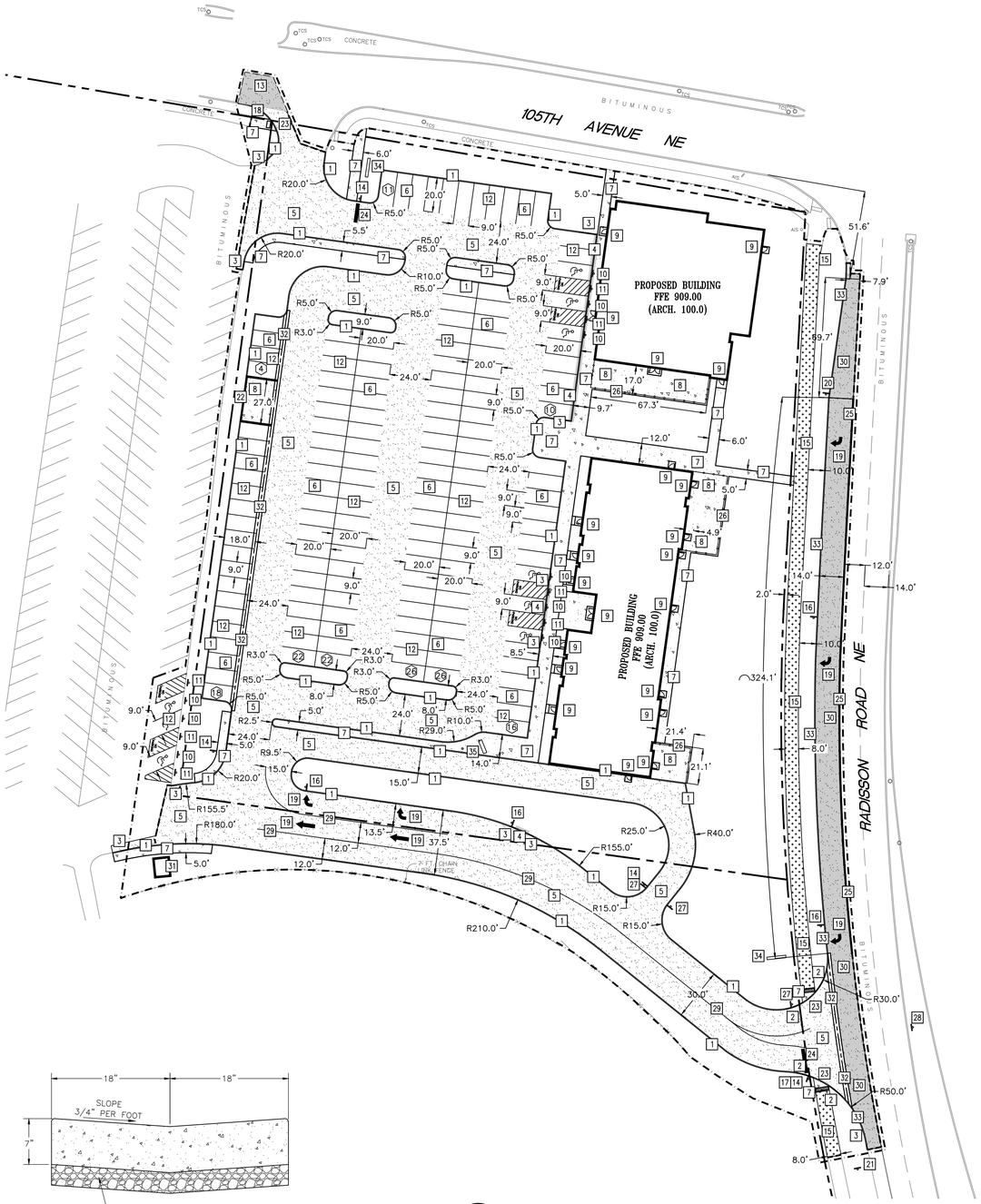

1 / C400 PAVING AND GEOMETRIC PLAN
1" = 40'

NOTES:

1: CONSTRUCT VALLEY GUTTER IN ACCORDANCE WITH MNDOT SPECIFICATION 2531.

2: CONTRACTOR SHALL EXTEND AGGREGATE BASE BELOW CONCRETE VALLEY GUTTER A MINIMUM OF 2" OR TO BOTTOM OF ADJACENT PAVEMENT AGGREGATE BASE, WHICH EVER IS GREATER.

2 / C400 CONCRETE VALLEY GUTTER
NOT TO SCALE

PROPOSED PLAN SYMBOLS

- CONSTRUCTION LIMITS
- PROPERTY LINE
- SAWCUT LINE (APPROX.)
- BITUMINOUS PAVEMENT
- MATCH EXISTING BITUMINOUS PAVEMENT
- CONCRETE PAVEMENT/SIDEWALK
- BITUMINOUS PATH
- FLAT CURB AND GUTTER
- PEDESTRIAN CURB RAMP
- ACCESSIBLE PARKING SYMBOL
- SIGN
- PARKING STALL COUNT

ABBREVIATIONS

BM	Benchmark
CB	Catch Basin
CONC	Concrete
ELEV	Elevation
EX	Existing
FFE	Finished Floor Elevation
HHF	Fiber Optic Handhole
INV	Invert
R	Radius
TCS	Traffic Control Sign
TL	Traffic Light
THH	Top Nut Hydrant
MNMUTCD	Minnesota Manual on Uniform Traffic Control Devices

*NOTE: CONSTRUCTION LIMITS ARE ANTICIPATED TO BE PROPERTY LINE UNLESS OTHERWISE SHOWN.

NOTE:
FOR WORK WITHIN ANOKA COUNTY R/W: THE 2020 EDITION OF THE MINNESOTA DEPARTMENT OF TRANSPORTATION 'STANDARD SPECIFICATIONS FOR CONSTRUCTION' AND THE 'SUPPLEMENTAL SPECIFICATIONS DATED SEPTEMBER 2022 SHALL GOVERN.

N

40' 20' 0 40' 80'
SCALE 1" = 40'

KEYED NOTES

KEYED NOTES ARE DENOTED BY NO ON PLAN.

1. INSTALL B612 CONCRETE CURB AND GUTTER. REFER TO DETAIL 1/C503.
2. PROVIDE 10-FOOT TRANSITION BETWEEN CURB TYPES.
3. INSTALL NOSE-DOWN CURB SECTION. REFER TO DETAIL 5/C503.
4. INSTALL FLAT CURB SECTION. REFER TO DETAIL 4/C503.
5. INSTALL HEAVY-DUTY BITUMINOUS PAVEMENT. REFER TO DETAIL 7/C503.
6. INSTALL LIGHT-DUTY BITUMINOUS PAVEMENT. REFER TO DETAIL 6/C503.
7. INSTALL CONCRETE WALK. REFER TO DETAIL 2/C503.
8. INSTALL CONCRETE PAVEMENT. REFER TO DETAIL 8/C503.
9. STOOP. REFER TO STRUCTURAL PLANS AND DETAILS.
10. INSTALL ACCESSIBLE PARKING SIGN. REFER TO DETAIL 9/C503.
11. INSTALL NO PARKING ACCESS AISLE SIGN. REFER TO DETAIL 9/C503.
12. PAINT PARKING LOT STRIPING AND NO PARKING AREA, 4" WIDE STRIPES, WHITE IN COLOR. STRIPING FOR CROSS HATCH SHALL BE AS SHOWN SPACED 3' APART.
13. INSTALL NEW BITUMINOUS PAVEMENT TO MATCH EXISTING PAVEMENT CROSS SECTION. FOR BIDDING PURPOSES REFER TO DETAIL 7/C503. INTENT IS TO MATCH EXISTING PAVEMENT CROSS SECTION.
14. INSTALL STOP SIGN. REFER TO DETAIL 9/C503.
15. INSTALL BITUMINOUS TRAIL. REFER TO DETAIL 3/C503.
16. INSTALL RIGHT LANE MUST TURN RIGHT SIGN. REFER TO DETAILS 7/C501 AND 9/C503.
17. INSTALL RIGHT TURN ONLY SIGN. SIGN SHALL BE MOUNTED BELOW STOP SIGN ON SAME POLE. REFER TO DETAIL 9/C503.
18. INSTALL B618 CONCRETE CURB AND GUTTER. REFER TO DETAIL 1/C503.
19. PAINT TRAFFIC ARROW AS SHOWN, WHITE IN COLOR.
20. REINSTALL SALVAGED ANOKA COUNTY SOUTH 52 SIGN. FOR SIGN POST REFER TO DETAIL 7/C501.
21. REINSTALL SALVAGED NO PARKING SIGN. FOR SIGN POST REFER TO DETAIL 7/C501.
22. INSTALL SCREENING WALL. REFER TO ARCHITECTURAL PLANS AND DETAILS.
23. INSTALL PEDESTRIAN CURB RAMP. REFER TO DETAIL 10/C503 FOR TRUNCATED DOOMS. REFER TO MN/DOT STANDARD PLAN 5-297.250 AND MN/DOT STANDARD PLATE 7038.
24. STRIPE STOP BAR, 24" WIDE AND WHITE IN COLOR.
25. STRIPE LANE DELINEATION, 4" WIDE AND WHITE IN COLOR.
26. INSTALL FENCE. REFER TO ARCHITECTURAL PLANS AND DETAILS.
27. INSTALL DO NOT ENTER SIGN. REFER TO DETAIL 9/C503.
28. INSTALL ONE WAY R6-1 SIGN. REFER TO DETAIL 8/C501.
29. STRIPE LANE DELINEATION, 4" WIDE AND YELLOW IN COLOR.
30. INSTALL NEW BITUMINOUS PAVEMENT TO MATCH EXISTING PAVEMENT CROSS SECTION. REFER TO DETAIL 11/C503. INTENT IS TO MATCH EXISTING PAVEMENT CROSS SECTION. REFER TO DETAIL 5/C502 FOR MILL AND OVERLAY MATCH POINT OF EXISTING AND PROPOSED BITUMINOUS.
31. LOCATION OF SALVAGED PICNIC SHELTER.
32. INSTALL CONCRETE VALLEY GUTTER. REFER TO DETAIL 2/C400.
33. INSTALL B418 CURB. REFER TO DETAIL 2/C504.
34. MONUMENT SIGN. REFER TO ARCHITECTURAL PLANS AND DETAILS.
35. MENU SIGN AND SPEAKER. REFER TO ARCHITECTURAL PLANS AND DETAILS.

PAVING NOTES:

1. CONTRACTOR SHALL FOLLOW ALL CITY OF BLAINE STANDARDS AND SPECIFICATIONS.
2. ALL DIMENSIONS ARE TO FACE OF CURB UNLESS NOTED OTHERWISE.
3. ALL CURB AND GUTTER IS TO BE B612 CONCRETE CURB AND GUTTER UNLESS NOTED OTHERWISE.
4. NO SIDEWALK IS TO HAVE MORE THAN A 2% CROSS SLOPE OR MORE THAN A 5% LONGITUDINAL SLOPE.
5. REFER TO ARCHITECTURAL PLANS FOR PROPOSED BUILDING LAYOUT.
6. FOLLOW ALL CITY OF BLAINE AND ANOKA COUNTY RULES, REGULATIONS, AND SPECIFICATIONS WHEN WORKING IN PUBLIC RIGHT OF WAY.
7. STRIPE PARKING LOTS AS SHOWN. ALL PARKING STALLS ARE TO BE 9 FEET WIDE BY 20 FEET LONG, UNLESS NOTED OTHERWISE.
8. ACCESSIBLE AISLES SHALL BE STRIPED PER MN CODE (SECTION 502). WHERE "NO PARKING" SIGNAGE WOULD OBSTRUCT A CURB RAMP OR ACCESSIBLE ROUTE, "NO PARKING" SHALL BE PRINTED ON THE SURFACE OF THE ACCESS AISLE.
9. THE CONTRACTOR IS TO CONTACT THE CITY OF BLAINE FIRE MARSHALL FOR THE EXACT PLACEMENT OF FIRE LANES, YELLOW-PAINTED CURBING, AND NO PARKING AREAS FOR FIRE PROTECTION PURPOSES.
10. REFER TO STRUCTURAL PLANS FOR STOOP DETAILS. ALL WALKS ARE TO BE CENTERED ON THE DOORS.
11. INSTALL APPROPRIATE EXPANSION MATERIAL WHERE CONCRETE IS ADJACENT TO BUILDING FACE.
12. ALL EXPANSION AND ISOLATION JOINTS SHALL BE SEALED PER SPECIFICATIONS.
13. MATCH NEW PAVEMENT, CURB AND GUTTER, AND SIDEWALK INTO EXISTING. NO ABRUPT GRADE TRANSITIONS OR PONDING OF WATER WILL BE ALLOWED.
14. SAWCUT EXISTING PAVEMENT, SIDEWALK, AND CURB AND GUTTER TO NEAREST JOINT. COORDINATE REMOVAL LIMITS WITH SITE DEMOLITION CONTRACTOR AND CONSTRUCTION MANAGER.
15. INSTALL DRIVE ENTRANCE PER CITY OF BLAINE STANDARDS AND SPECIFICATIONS. FOLLOW ALL CITY OF BLAINE AND ANOKA COUNTY REQUIREMENTS FOR TRAFFIC CONTROL.
16. **REFER TO SPECIFICATIONS FOR GRADE VERIFICATION SURVEY REQUIREMENTS PRIOR TO PLACEMENT OF SUB-BASE MATERIAL, BASE MATERIAL, AND PAVEMENTS/SIDEWALKS.**

OWNER:
PINPOINT
Contact: Mike Breese
Phone: 612-978-3688
Email: mike@pinpointeg.com

little box
Address: 2744 Lyndale Ave S
Minneapolis, MN 55408
Phone: 612-804-6314
Email: jnelson@littleboxinc.com

CIVIL & STRUCTURAL:
BKBM ENGINEERS
Address: 6120 Earle Brown Dr. Ste 700
Minneapolis, MN 55430
Civil Phone: 763-843-0427
Structure Phone: 763-843-0443
BKBM Project No. 23169.50

MEP:
EEA ERICKSEN ELLISON and Associates Inc.
Address: 305 2nd St NW Suite 105
New Brighton, MN 55112
Phone: 651-632-2300

LANDSCAPE:
DF/ DAMON FARBER
LANDSCAPE ARCHITECTS
Address: 310 S 4th Ave. Ste 7050
Minneapolis, MN 55415
Phone: 763-257-7928

I hereby certify that this plan, specification or report was prepared by me or under my direct supervision and that I am a duly Licensed PROFESSIONAL ENGINEER *under the laws of the State of MN*

Kevin A. Bohl
Kevin A. Bohl
License Number: 52209 Date: 07/12/2023

SOUTH SIDE ENTERTAINMENT DISTRICT

A Development By:
PinPoint Equity Group

NO	DESCRIPTION	DATE

P

PROJ NO	
DATE	2023/07/12
DRAWN BY	WH
CHECK BY	NPA

PAVING AND GEOMETRIC PLAN

C400

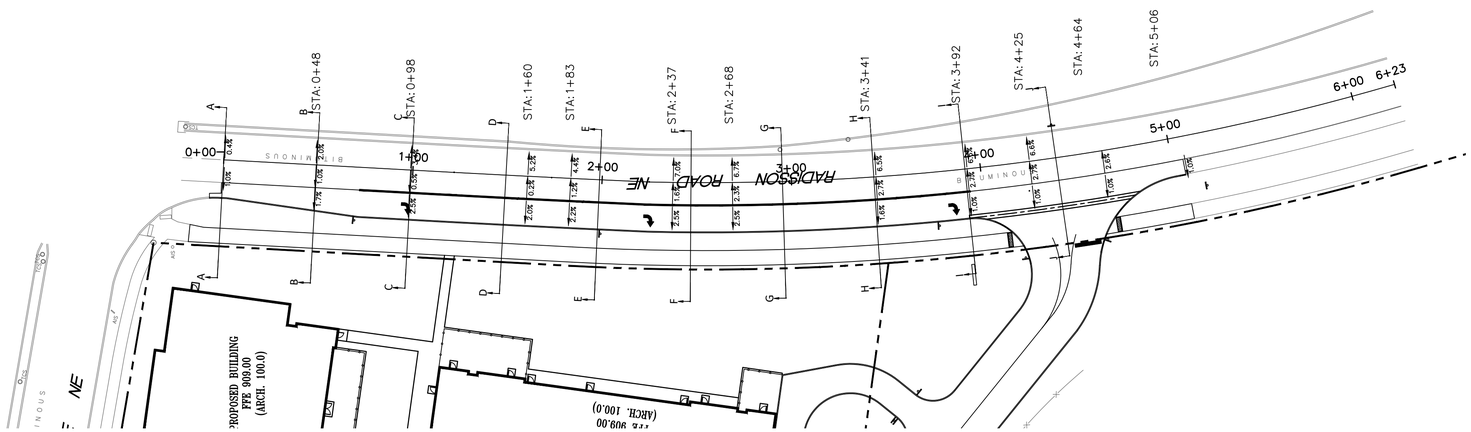

1 / C401 RADISON ROAD NE
1" = 40'

N

40' 20' 0 40' 80'
SCALE 1" = 40'

SUPER ELEVATION TRANSITION RATE:

A LANE WIDTH OF 14-FEET AND ADJUSTMENT FACTOR OF 1.5 IS BEING USED FOR SUPER ELEVATION RUNOFF DISTANCE CALCULATIONS.

A 1:400 SUPER ELEVATION TRANSITION RATE IS BEING USED, EXCEPT BETWEEN STATION 0=48 AND 0+98 WHERE A 1:300 TRANSITION RATE IS USED.

APPROVED FOR COUNTY TURN LANE ITEMS ONLY (SHEETS C100, C200, C300, C400, C401, C500, C501, C502, C503, C504, C600, C601)

_____ DATE _____
ANOKA COUNTY ENGINEER

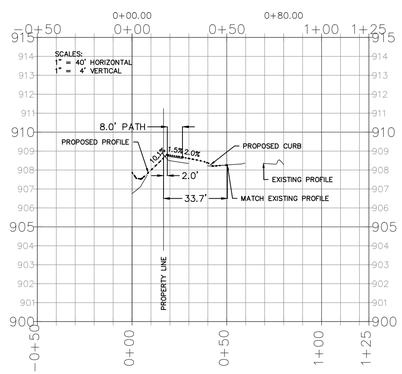

SECTION A – A

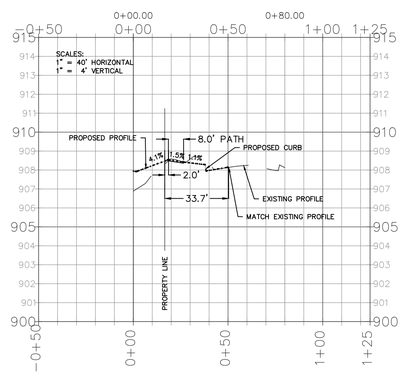

SECTION B – B

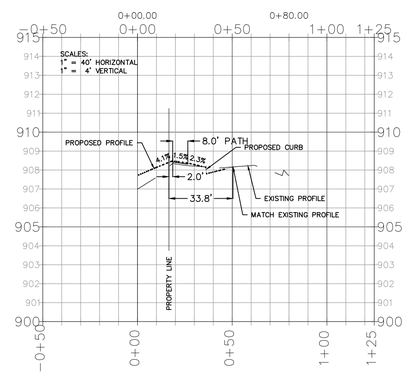

SECTION C – C

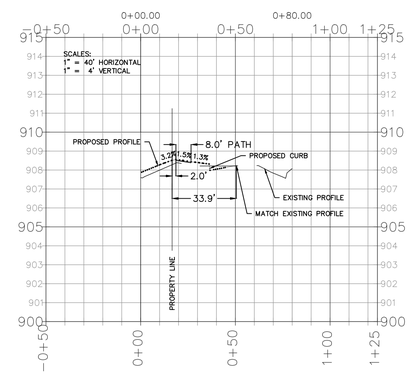

SECTION D – D

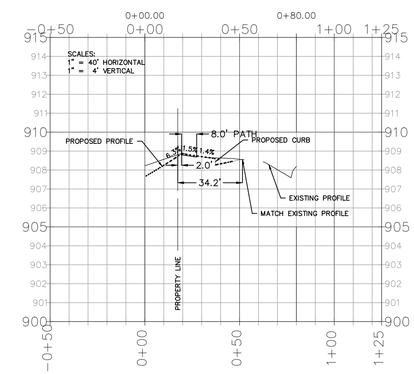

SECTION E – E

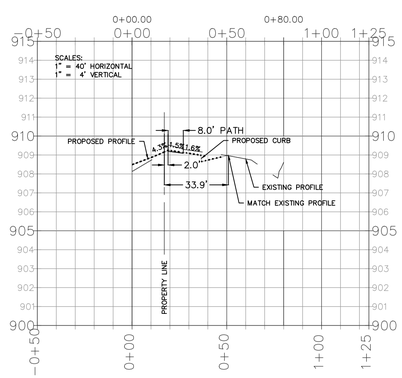

SECTION F – F

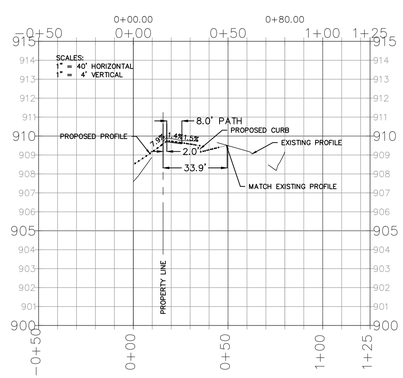

SECTION G – G

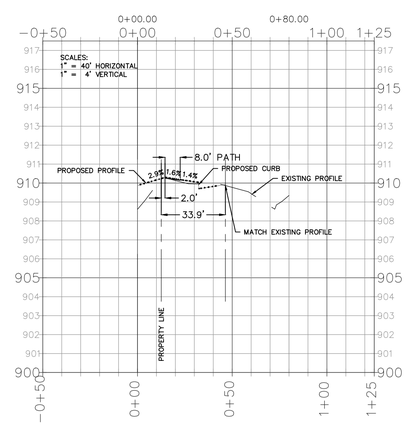

SECTION H – H

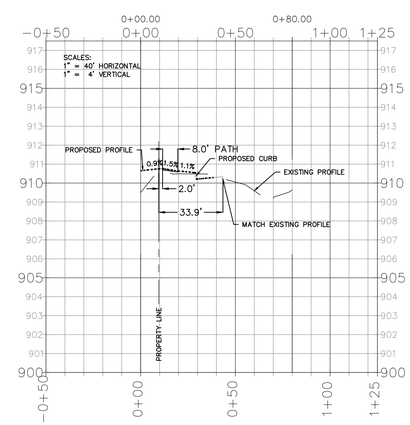

SECTION I – I

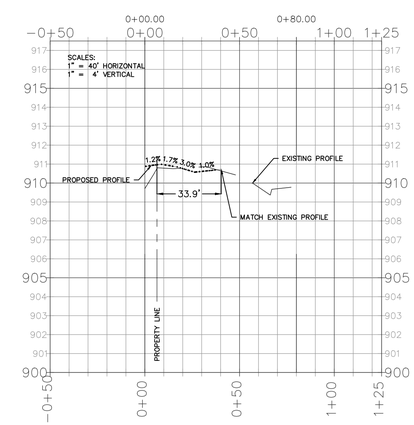

SECTION J – J

OWNER:
PINPOINT
Contact: Mike Breese
Phone: 612-978-3688
Email: mike@pinpointeg.com

little box
Address: 2744 Lyndale Ave S
Minneapolis, MN 55408
Phone: 612-804-6314
Email: jnelson@littleboxinc.com

CIVIL & STRUCTURAL:
BKBM ENGINEERS
Address: 6120 Earle Brown Dr. Ste 700
Minneapolis, MN 55430
Civil Phone: 763-843-0427
Structure Phone: 763-843-0443
BKBM Project No. 23169.50

MEP:
EEA ERICKSEN ELLISON and Associates Inc.
Address: 305 2nd St NW Suite 105
New Brighton, MN 55112
Phone: 651-632-2300

LANDSCAPE:
DF/ DAMON FARBER
LANDSCAPE ARCHITECTS
Address: 310 S 4th Ave. Ste 7050
Minneapolis, MN 55415
Phone: 763-257-7928

I hereby certify that this plan, specification or report was prepared by me or under my direct supervision and that I am a duly Licensed PROFESSIONAL ENGINEER *under the laws of the State of MN*

Kevin A. Bohl

Kevin A. Bohl
License Number: 52209 Date: 07/12/2023

SOUTH SIDE ENTERTAINMENT DISTRICT

A Development By:
PinPoint Equity Group

NO	DESCRIPTION	DATE

P

PROJ NO	
DATE	2023/07/12
DRAWN BY	WH
CHECK BY	NPA

RADISSON ROAD
CROSS SECTIONS

C401

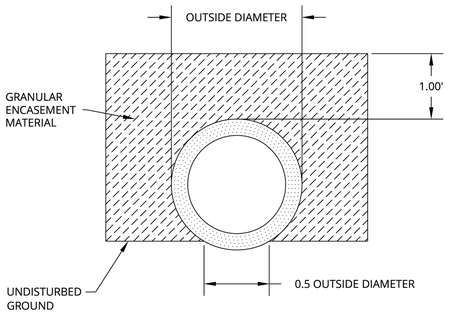

NOTES:
1. THIS IS THE STANDARD PIPE BEDDING APPLICATION UNLESS OTHER BEDDING IS SPECIFIED.
2. THE BOTTOM OF THE TRENCH SHALL BE SHAPED TO FIT THE BARREL OF THE PIPE FOR AT LEAST 50% OF THE OUTSIDE DIAMETER OF THE PIPE. THE REMAINDER OF THE PIPE IS TO BE SURROUNDED TO A HEIGHT OF AT LEAST 1' ABOVE ITS TOP.
3. GRANULAR ENCASEMENT MATERIAL SHALL MEET THE REQUIREMENTS OF THE SPECIFICATIONS.
4. NATIVE BLAINE GRANULAR MATERIAL IS CONSIDERED TO MEET THE INTENT OF THIS DETAIL.

CLASS C PIPE BEDDING — Plate No. MI-4

2023 STANDARD DETAIL PLATE
City of Blaine - Engineering Department
10801 Town Square Drive NE, Blaine, Minnesota 55449 763-785-6172 Fax 763-785-6139

7 C500 ROCK CONSTRUCTION ENTRANCE
NOT TO SCALE

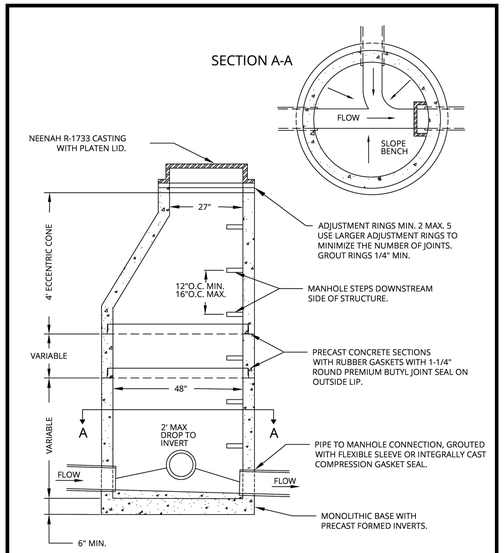

STANDARD SANITARY MANHOLE — Plate No. SSS-7

2023 STANDARD DETAIL PLATE
City of Blaine - Engineering Department
10801 Town Square Drive NE, Blaine, Minnesota 55449 763-785-6172 Fax 763-785-6139

5 C500 STANDARD SANITARY MANHOLE
NOT TO SCALE

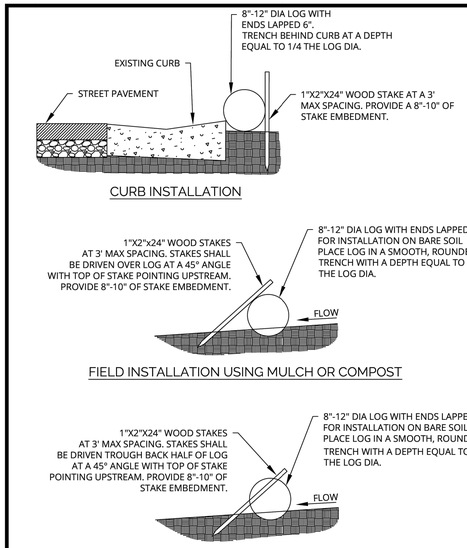

SEDIMENT CONTROL LOG INSTALLATION — Plate No. EC-8

2023 STANDARD DETAIL PLATE
City of Blaine - Engineering Department
10801 Town Square Drive NE, Blaine, Minnesota 55449 763-785-6172 Fax 763-785-6139

3 C500 SEDIMENT CONTROL LOG INSTALLATION
NOT TO SCALE

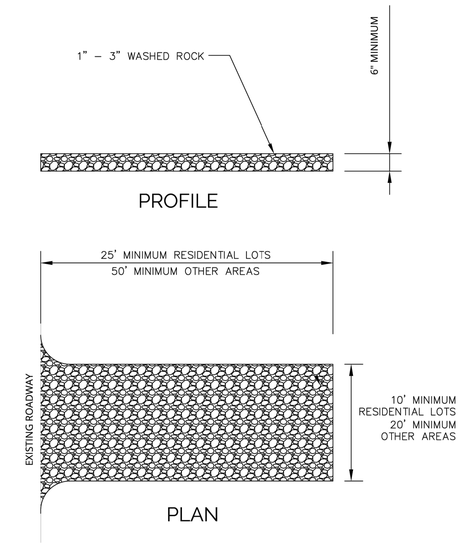

ROCK CONSTRUCTION ENTRANCE — Plate No. EC-3

2023 STANDARD DETAIL PLATE
City of Blaine - Engineering Department
10801 Town Square Drive NE, Blaine, Minnesota 55449 763-785-6172 Fax 763-785-6139

1 C500 ROCK CONSTRUCTION ENTRANCE
NOT TO SCALE

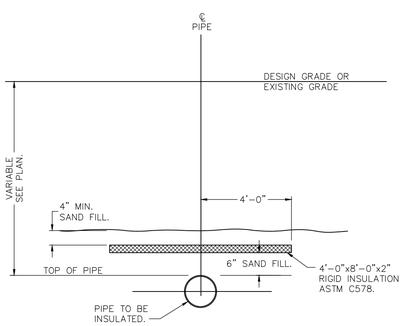

8 C500 PIPE INSULATION DETAIL
NOT TO SCALE

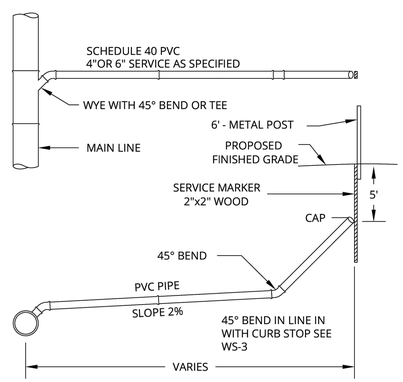

NOTE: WHEN SANITARY SERVICE IS NOT ACCOMPANIED BY A WATER SERVICE IN THE SAME TRENCH, INSTALL A 6' POST NEXT TO THE 2"x2" MARKER AND PAINT THE TOP 6" GREEN, FOR VACANT LOTS, USE 6' STEEL FENCE POST.

- UNLESS OTHERWISE INDICATED ON PLANS

NO BEND MAY BE USED OTHER THAN THOSE SHOWN ON DETAIL

SOLVENT WELD ALL JOINTS

ON EXISTING MAINS, SEE DETAIL SSS-1

IF DISTANCE FROM MAIN TO STRUCTURE IS GREATER THAN 100', A CLEAN OUT MUST BE INSTALLED AT 100' INTERVALS, SEE DETAIL SSS-4.

SERVICE CONNECTION — Plate No. SSS-3

2023 STANDARD DETAIL PLATE
City of Blaine - Engineering Department
10801 Town Square Drive NE, Blaine, Minnesota 55449 763-785-6172 Fax 763-785-6139

6 C500 SERVICE CONNECTION
NOT TO SCALE

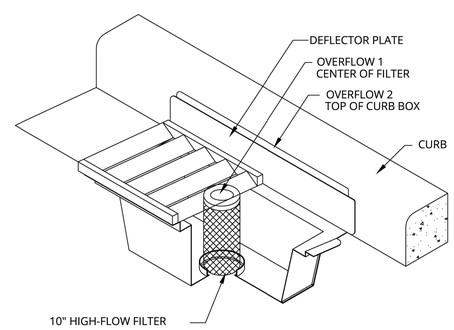

NOTES:
- WIMCO CG MODEL OR APPROVED EQUAL TO MATCH CASTING
- SILT FENCE/FABRIC NOT ALLOWED TO BE USED AS INLET PROTECTION

INLET PROTECTION FOR CURB AND GUTTER — Plate No. EC-4

2023 STANDARD DETAIL PLATE
City of Blaine - Engineering Department
10801 Town Square Drive NE, Blaine, Minnesota 55449 763-785-6172 Fax 763-785-6139

4 C500 INLET PROTECTION FOR CURB AND GUTTER
NOT TO SCALE

- USE PROPER EQUIPMENT SUCH THAT THE SOIL IS SLICED, NOT TURNED OVER.
- GEOTEXTILE FABRIC EMBEDDED 8" TO 12" IN THE SOIL SLIT, LEAVING ABOUT 2' OF FABRIC ABOVE GROUND.
- COMPACT THE SOIL IMMEDIATELY NEXT TO THE GEOTEXTILE BY DRIVING OVER IT WITH A TRACTOR TIRE AT LEAST TWICE.
- STEEL T-POSTS PLACED ON DOWNSTREAM SIDE OF WATER FLOW EMBEDDED AT LEAST 2' INTO THE GROUND. MAXIMUM SPACING 6'. NIPPLES ON POST FACE AWAY FROM THE GEOTEXTILE TO KEEP TIES FROM SLIPPING ON POST.
- FOR STEEL POSTS USE 3 PLASTIC ZIP TIES (50 LB TENSILE) AT LEAST 1" APART TO SECURE THE GEOTEXTILE TO EACH POST WITHIN THE TOP 8".
- FENCE SHALL BE HEAVY DUTY TYPE.
- USE WOOD LATHE AND STAPLES ON FACE OF SILT FENCE TO SECURE TO WOOD POSTS.
- CONTRACTOR SHALL REMOVE FENCE AND POSTS PER SPECIFICATIONS.

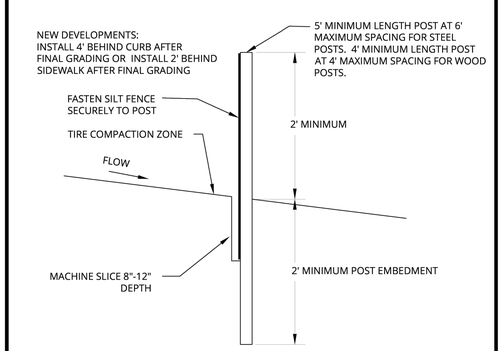

SILT FENCE MATERIALS SHALL MEET MNDOT SPECIFICATION 3886
CONTRACTOR SHALL REMOVE FENCE AND POSTS PER SPECIFICATIONS.

MACHINE SLICED SILT FENCE — Plate No. EC-1

2023 STANDARD DETAIL PLATE
City of Blaine - Engineering Department
10801 Town Square Drive NE, Blaine, Minnesota 55449 763-785-6172 Fax 763-785-6139

2 C500 SILT FENCE DEAIL
NOT TO SCALE

OWNER:
PINPOINT
Contact: Mike Breese
Phone: 612-978-3688
Email: mike@pinpointeg.com

little box
Address: 2744 Lyndale Ave S Minneapolis, MN 55408
Phone: 612-804-6314
Email: jnelson@littleboxinc.com

CIVIL & STRUCTURAL:
BKBM ENGINEERS
Address: 6120 Earle Brown Dr. Ste 700 Minneapolis, MN 55430
Civil Phone: 763-843-0427
Structure Phone: 763-843-0443
BKBM Project No. 23169.50

MEP:
EEA ERICKSEN ELLISON and Associates Inc.
Address: 305 2nd St NW Suite 105 New Brighton, MN 55112
Phone: 651-632-2300

LANDSCAPE:
DF/ DAMON FARBER LANDSCAPE ARCHITECTS
Address: 310 S 4th Ave. Ste 7050 Minneapolis, MN 55415
Phone: 763-257-7928

I hereby certify that this plan, specification or report was prepared by me or under my direct supervision and that I am a duly Licensed PROFESSIONAL ENGINEER *under the laws of the State of MN*

Kevin A. Bohl

Kevin A. Bohl
License Number: 52209 Date: 07/12/2023

SOUTH SIDE ENTERTAINMENT DISTRICT

A Development By: PinPoint Equity Group

NO	DESCRIPTION	DATE

P

PROJ NO	
DATE	2023/07/12
DRAWN BY	WH
CHECK BY	NPA

CIVIL DETAILS

C500

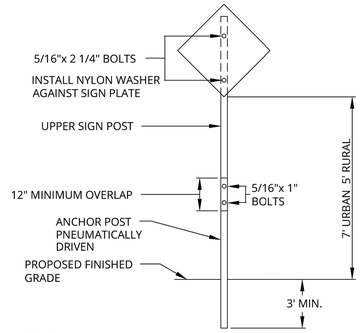

NOTES:

1. MATERIALS AND INSTALLATION SHALL BE IN ACCORDANCE WITH CITY SPECIFICATIONS FOR MNDOT 2564 TYPE C TRAFFIC SIGNS.
2. SIGN PANELS-REFLECTIVE SHEETING, VIP DIAMOND GRADE.
3. BOLTS SHALL BE STAINLESS STEEL.
4. FLANGED CHANNEL SIGN POSTS SHALL BE GALVANIZED STEEL, 7' LONG 3LB/LF BOTTOM POST, AND 7'LONG 2LB/LF TOP POST.
5. SIGNS INSTALLED IN CONCRETE SHALL HAVE AN APPROVED BREAK-AWAY DEVICE. SEE DETAIL ST-18.
6. EDGE OF SIGN SHALL BE 2' FROM FACE OF CURB AND/OR 5' FROM EDGE OF SHOULDER.

TRAFFIC SIGN INSTALLATION

Plate No. ST-2

2023 STANDARD DETAIL PLATE

City of Blaine - Engineering Department

10801 Town Square Drive NE, Blaine, Minnesota 55449 763-785-6172 Fax 763-785-6139

7 C501 TRAFFIC SIGN INSTALLATION
NOT TO SCALE

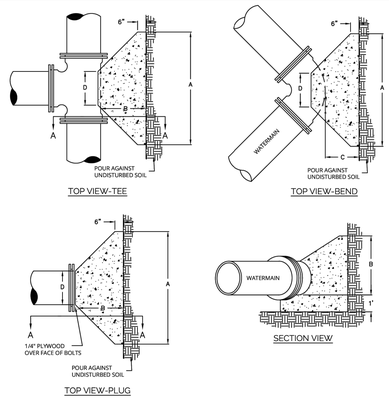

PIPE SIZE	22 ½ BEND			45% BEND			90% BEND		
	A	B	C	A	B	C	A	B	C
12"	1'-10"	1'-10"	2'-0"	3'-4"	2'-0"	2'-0"	4'-9"	2'-6"	2'-0"
16"	3'-0"	2'-0"	2'-0"	3'-10"	3'-0"	2'-0"	6'-2"	3'-6"	2'-6"
20"	3'-6"	2'-6"	3'-0"	5'-6"	3'-4"	3'-0"	8'-4"	4'-0"	
24"	4'-4"	3'-0"	3'-0"	6'-10"	3'-10"	3'-0"	9'-8"	5'-0"	
30"	--	--	3'-6"	9'-3"	6'-0"	3'-6"	17'-0"	6'-0"	3'-6"

DIMENSION D SHALL BE AS LARGE AS POSSIBLE WITHOUT INTERFERING WITH MJ BOLTS.

NOTES:
1. BLOCKING TO BE POURED CONCRETE, MNDOT MIX DESIGN 3A32.
2. FITTINGS MUST BE COVERED W/POLY (8 MIL) PRIOR TO POURING CONCRETE.
3. KEEP CONCRETE CLEAR OF BOLTS, JOINT AND ACCESSORIES.

THRUST BLOCK DETAIL

Plate No. WS-6

2023 STANDARD DETAIL PLATE

City of Blaine - Engineering Department

10801 Town Square Drive NE, Blaine, Minnesota 55449 763-785-6172 Fax 763-785-6139

5 C501 THRUST BLOCKING
NOT TO SCALE

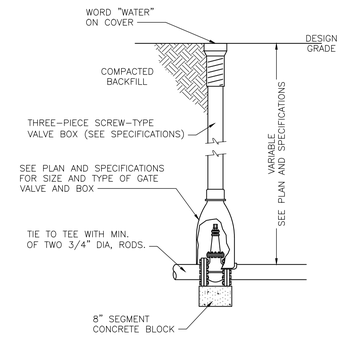

3 C501 GATE VALVE AND BOX INSTALLATION
NOT TO SCALE

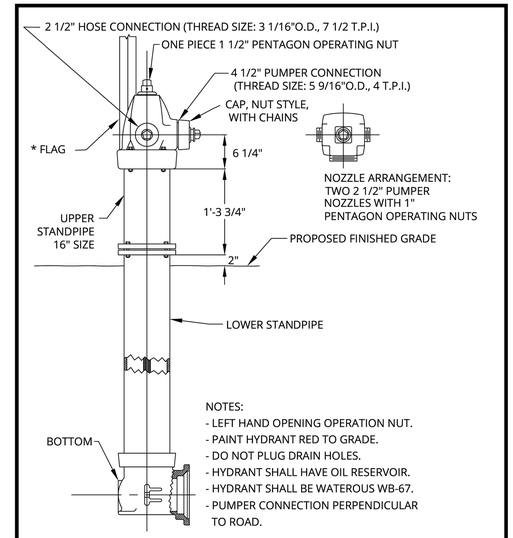

NOTES:
- LEFT HAND OPENING OPERATION NUT.
- PAINT HYDRANT RED TO GRADE.
- DO NOT PLUG DRAIN HOLES.
- HYDRANT SHALL HAVE OIL RESERVOIR.
- HYDRANT SHALL BE WATEROUS WB-67.
- PUMPER CONNECTION PERPENDICULAR TO ROAD.

* FLAG TO BE INSTALLED DIRECTLY ABOVE TRACER WIRE SIDE OF HYDRANT.

TYPICAL HYDRANT

Plate No. WS-1

2023 STANDARD DETAIL PLATE

City of Blaine - Engineering Department

10801 Town Square Drive NE, Blaine, Minnesota 55449 763-785-6172 Fax 763-785-6139

1 C501 TYPICAL HYRDANT
NOT TO SCALE

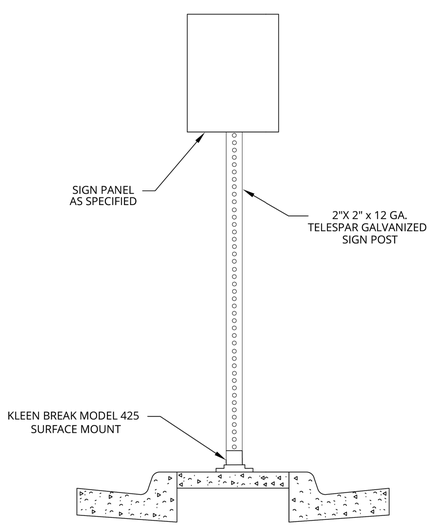

TRAFFIC SIGN INSTALLATION ON CONCRETE

Plate No. ST-15

2023 STANDARD DETAIL PLATE

City of Blaine - Engineering Department

10801 Town Square Drive NE, Blaine, Minnesota 55449 763-785-6172 Fax 763-785-6139

8 C501 TRAFFIC INSTALLATION ON CONCRETE
NOT TO SCALE

WATERMAIN OFFSET DETAIL

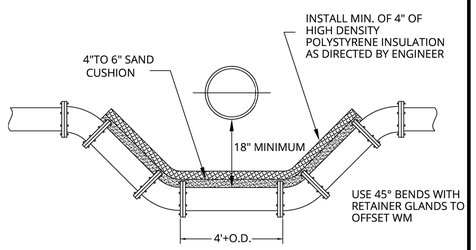

WATERMAIN INSULATION DETAIL

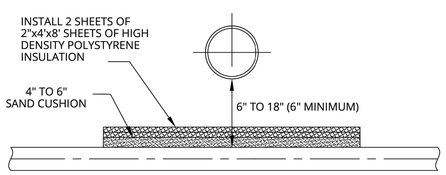

WATERMAIN OFFSET AND INSULATION DETAIL

Plate No. WS-5

2023 STANDARD DETAIL PLATE

City of Blaine - Engineering Department

10801 Town Square Drive NE, Blaine, Minnesota 55449 763-785-6172 Fax 763-785-6139

6 C501 WATERMAIN OFFSET AND INSULATION DETAIL
NOT TO SCALE

BENDS	PIPE SIZE 6"	8"	10"	12"	14"	16"	18"	20"	24"
90°	39	57	89	108	210	264	335	400	565
45°	32	46	70	86	164	202	250	305	405
22 1/2°	32	46	64	84	148	178	255	310	412
11 1/4°	30	42	58	74	130	158	205	245	315
SLEEVES									
SHORT	28	38	49	56	111	130	160	195	255
LONG	36	46	62	76	140	172	225	255	335
PLUG	18	26	36	46	85	93	130	153	202
CAP	17	25	35	44	79	100	122	202	214
TEES									
RUN									
6"	56								
8"	72	86							
10"	90	105	120						
12"	110	125	140	160					
14"	182	206	228	234	280				
16"	228	248	264	280	316	322			
18"	275	295	315	335	380	405	435		
20"	315	345	370	395	440	465	505	535	
24"	415	445	470	500	550	580	625	660	720
CROSS									
6"	80								
8"		105							
10"			145						
12"				215					
14"					335				
16"						385			
18"							XXX		
20"								XXX	
24"									XXX
REDUCERS									
8"	36								
10"	47	50							
12"	60	60	64						
14"	100	100	100	100					
16"	124	124	124	124	140				
18"		190	195	180	190	195			
20"			220	205	200	200	225		
24"				305	310	320	305	300	

WEIGHTS TAKEN FROM AWWA C153; XXX BASED ON C110 WEIGHT DOES NOT INCLUDE GLANDS, GASKETS, BOLTS AND RESTRAINING DEVICES

WATERMAIN FITTINGS

Plate No. WS-4

2023 STANDARD DETAIL PLATE

City of Blaine - Engineering Department

10801 Town Square Drive NE, Blaine, Minnesota 55449 763-785-6172 Fax 763-785-6139

4 C501 WATERMAIN FITTINGS
NOT TO SCALE

① CONTRACTOR SHALL INSTALL BEND TO ACHIEVE 7.5' BURY, BEND SHALL NOT EXCEED 45°, ALL FITTINGS WILL BE PAID AS PER UNIT PRICE.

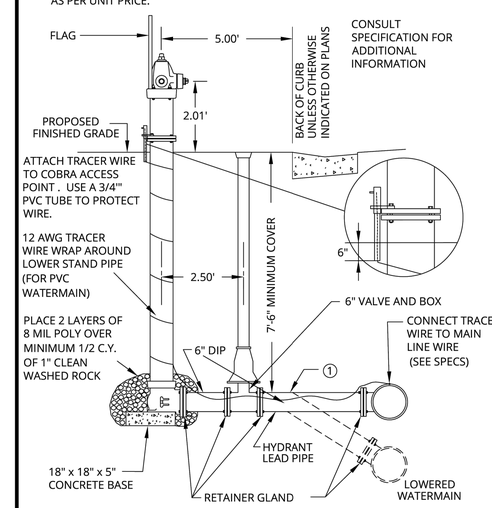

* FLAG TO BE INSTALLED DIRECTLY ABOVE TRACER WIRE SIDE OF HYDRANT.

HYDRANT INSTALLATION

Plate No. WS-2

2023 STANDARD DETAIL PLATE

City of Blaine - Engineering Department

10801 Town Square Drive NE, Blaine, Minnesota 55449 763-785-6172 Fax 763-785-6139

2 C501 HYDRANT INSTALLATION
NOT TO SCALE

OWNER:

PINPOINT

Contact: Mike Breese
Phone: 612-978-3688
Email: mike@pinpointeg.com

little box

Address: 2744 Lyndale Ave S Minneapolis, MN 55408
Phone: 612-804-6314
Email: jnelson@littleboxinc.com

CIVIL & STRUCTURAL:

BKBM ENGINEERS

Address: 6120 Earle Brown Dr. Ste 700 Minneapolis, MN 55430
Civil Phone: 763-843-0427
Structure Phone: 763-843-0443
BKBM Project No. 23169.50

MEP:

EEA ERICKSEN ELLISON and Associates Inc.

Address: 305 2nd St NW Suite 105 New Brighton, MN 55112
Phone: 651-632-2300

LANDSCAPE:

DF/ DAMON FARBER LANDSCAPE ARCHITECTS

Address: 310 S 4th Ave. Ste 7050 Minneapolis, MN 55415
Phone: 763-257-7928

I hereby certify that this plan, specification or report was prepared by me or under my direct supervision and that I am a duly Licensed PROFESSIONAL ENGINEER *under the laws of the State of MN*

Kevin A. Bohl

Kevin A. Bohl

License Number: 52209 Date: 07/12/2023

SOUTH SIDE ENTERTAINMENT DISTRICT

A Development By: PinPoint Equity Group

NO	DESCRIPTION	DATE

P

PROJ NO	
DATE	2023/07/12
DRAWN BY	WH
CHECK BY	NPA

CIVIL DETAILS

C501

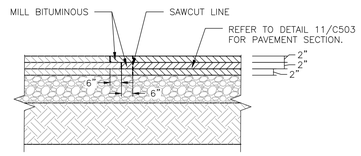

5 C502 COUNTY ROAD BITUMINOUS PAVEMENT MATCH
NOT TO SCALE

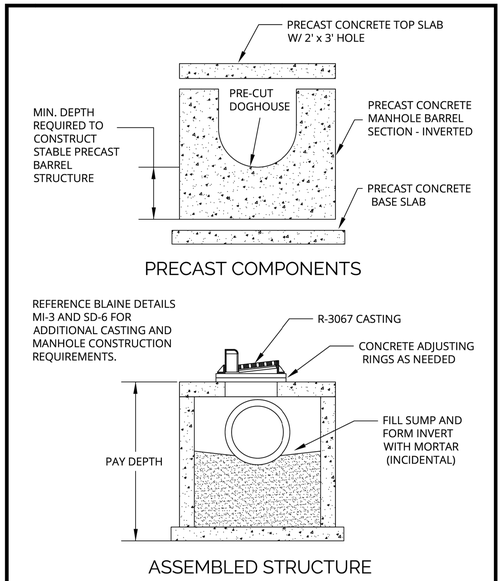

SHALLOW DEPTH BASIN MANHOLE Plate No. SD-7

2023 STANDARD DETAIL PLATE
City of Blaine - Engineering Department
10801 Town Square Drive NE, Blaine, Minnesota 55449 763-785-6172 Fax 763-785-6139

3 C502 SHALLOW DEPTH CATCH BASIN / MANHOLE
NOT TO SCALE

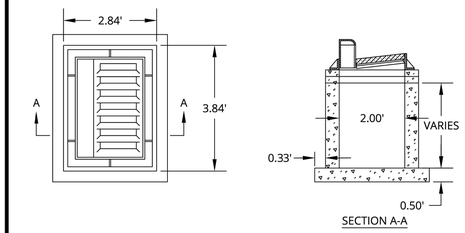

NOTES:
1. INSIDE DIMENSIONS 2.00' X 3.00'
2. BASE TO BE GROUTED TO FORM A SMOOTH INVERT TO OUTLET.
3. PIPE CUT OUTS TO BE LOCATED WHERE REQUIRED.
4. STRENGTH DESIGN OF BASE SLAB AND STRUCTURE PER MANUFACTURER.
5. SEE DETAIL MI-3 FOR ADJUSTING RING CONSTRUCTION
6. SEE SD-5 FOR CASTING SCHEDULE

24" x 36" CATCH BASIN Plate No. SD-1

2023 STANDARD DETAIL PLATE
City of Blaine - Engineering Department
10801 Town Square Drive NE, Blaine, Minnesota 55449 763-785-6172 Fax 763-785-6139

1 C502 24"x36" CATCH BASIN
NOT TO SCALE

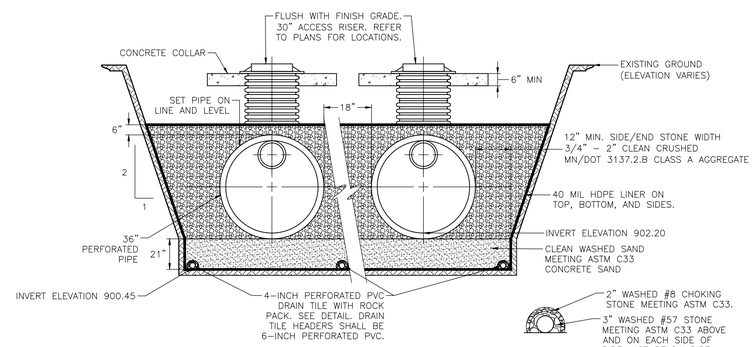

1. CONTRACTOR HAS OPTION TO USE CMP/HDPE PIPE. SYSTEM LAYOUT IS DESIGNED BASED ON CMP PIPE. ANY ALTERNATE DESIGNS MUST BE APPROVED BY CIVIL ENGINEER PRIOR TO CONSTRUCTION.
2. UTILIZE CARE WHEN LOWERING UNIT INTO THE TRENCH. HANDLE USING NYLON SLINGS AND TWO PICK POINTS.
3. PLACE BACKFILL AROUND THE UNIT IN UNIFORM 8"–12" LIFTS, COMPACTED TO 95% SPD.
4. WHEN THE UNIT CONSISTS OF 2 SECTIONS, PLACE THE DOWNSTREAM SECTION FIRST. CONNECT AND HOME THE REMAINING SECTIONS.
5. ALL CONNECTION POINTS ARE TO BE SOIL PROOF.
6. ACCESS RISERS AND CONCRETE COLLARS SHALL BE DESIGNED TO WITHSTAND HS25 LOADING.
7. PIPE SHALL BE FURNISHED WITH PERFORATIONS 3/8" IN DIAMETER AND PERFORATED FOR THE FULL 360 DEGREE CIRCUMFERENCE OF THE PIPE. MINIMUM OPEN AREA SHALL BE 2.3% OR GREATER.
8. DRAIN TILE HEADERS SHALL BE 6-INCH PERFORATED PVC WITH ROCK PACK. DRAIN TILE LATERALS SHALL BE 4-INCH PERFORATED PVC WITH ROCK PACK.

DRAIN TILE ROCK PACK DETAIL

ROW LENGTH:	320 FEET
NUMBER OF ROWS:	12
NUMBER OF HEADERS:	2
FILTRATION VOLUME:	22,159 CUBIC FEET
TOTAL STORAGE VOLUME:	42,701 CUBIC FEET

4 C502 FILTRATION TANK SYSTEM
NOT TO SCALE

NOTES:
1. 54" THRU 120" DIA. STRUCTURES ARE MANUFACTURED WITH BELL END FACING DOWN.
2. STRUCTURES ARE MANUFACTURED IN ACCORDANCE WITH ASTM C-478 AND MNDOT STANDARD PLATE 4005 WITH RUBBER GASKET JOINTS.
3. REFER TO BLAINE DETAIL MI-3 FOR CASTING, ADJUSTING RINGS, AND STEPS.
4. PROVIDE MORTAR FILLETS TO FIT THE BOTTOM PORTION OF PIPE TO DIRECT FLOW TO OUTLET HALF-WAY UP PIPE MINIMUM.
5. COVER SLAB DESIGN VARIES WITH CASTING.
6. REINFORCING STEEL SHALL BE PER ASTM C-478 AND MNDOT PLATE 4005.

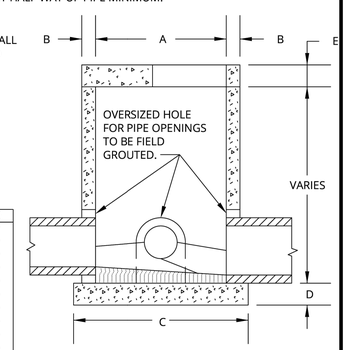

A	B	C	D	E
48"	5"	64"	6"	6"
54"	5.5"	72"	8"	8"
60"	6"	78"	8"	8"
66"	6.5"	85"	8"	8"
72"	7"	92"	8"	8"
78"	7.5"	100"	8"	8"
84"	8"	106"	8"	8"
90"	8.5"	114"	8"	8"
96"	9"	120"	8"	8"
102"	9.5"	127"	12"	8"
108"	10"	132"	12"	12"
120"	10"	146"	12"	12"

STANDARD STORM SEWER CATCH BASIN/MANHOLE & MANHOLE Plate No. SD-6

2023 STANDARD DETAIL PLATE
City of Blaine - Engineering Department
10801 Town Square Drive NE, Blaine, Minnesota 55449 763-785-6172 Fax 763-785-6139

2 C502 STANDARD CATCH BASIN / MANHOLE
NOT TO SCALE

OWNER:
PINPOINT
Contact: Mike Breese
Phone: 612-978-3688
Email: mike@pinpointeg.com

little box
Address: 2744 Lyndale Ave S Minneapolis, MN 55408
Phone: 612-804-6314
Email: jnelson@littleboxinc.com

CIVIL & STRUCTURAL:
BKBM ENGINEERS
Address: 6120 Earle Brown Dr. Ste 700 Minneapolis, MN 55430
Civil Phone: 763-843-0427
Structure Phone: 763-843-0443
BKBM Project No. 23169.50

MEP:
EEA ERICKSEN ELLISON and Associates Inc.
Address: 305 2nd St NW Suite 105 New Brighton, MN 55112
Phone: 651-632-2300

LANDSCAPE:
DF/ DAMON FARBER LANDSCAPE ARCHITECTS
Address: 310 S 4th Ave. Ste 7050 Minneapolis, MN 55415
Phone: 763-257-7928

I hereby certify that this plan, specification or report was prepared by me or under my direct supervision and that I am a duly Licensed PROFESSIONAL ENGINEER *under the laws of the State of MN*

Kevin A. Bohl

License Number: 52209 Date: 07/12/2023

SOUTH SIDE ENTERTAINMENT DISTRICT

A Development By: PinPoint Equity Group

NO	DESCRIPTION	DATE

P

PROJ NO	
DATE	2023/07/12
DRAWN BY	WH
CHECK BY	NPA

CIVIL DETAILS

C502

THE CITY OF BLAINE WILL USE MNDOT STANDARD PLAN SHEETS 5-297.250 (1-6) FOR THE CONSTRUCTION OF RAMPS, EXCEPT AS MODIFIED BELOW:

1. TRUNCATED DOME PANELS SHALL BE GRAY EPOXY COATED PER CURRENT MNDOT APPROVED PRODUCTS LIST.
2. THE PANELS SHALL BE INSTALLED IN WET MORTAR BASE OVER A 6" CONCRETE SLAB.

PEDESTRIAN RAMP REQUIREMENTS

Plate No. ST-14

2023 STANDARD DETAIL PLATE

City of Blaine - Engineering Department

10801 Town Square Drive NE, Blaine, Minnesota 55449 763-785-6172 Fax 763-785-6139

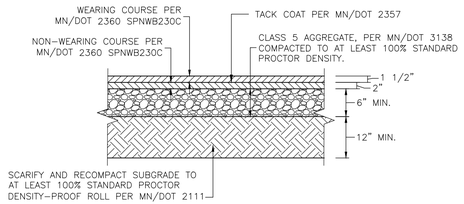

6 C503 LIGHT-DUTY BITUMINOUS PAVEMENT
NOT TO SCALE

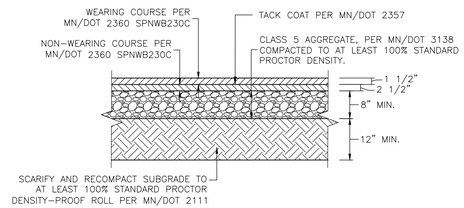

7 C503 HEAVY-DUTY BITUMINOUS PAVEMENT
NOT TO SCALE

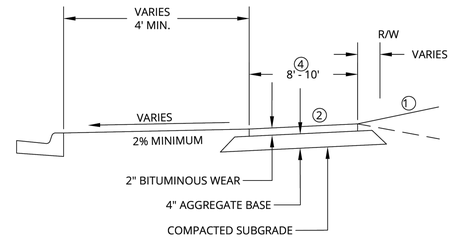

NOTES:
1 - SLOPE VARIES 1:2 TO 1:4
2 - CROSS SLOPE 2%
3 - RESTORE ALL DISTURBED AREAS WITH 4" TOPSOIL AND SOD.
4 - CHECK WITH CITY ENGINEERING DEPARTMENT FOR REQUIRED WIDTH.

OFF ROAD TRAIL TYPICAL SECTION

Plate No. ST-13

2023 STANDARD DETAIL PLATE

City of Blaine - Engineering Department

10801 Town Square Drive NE, Blaine, Minnesota 55449 763-785-6172 Fax 763-785-6139

3 C503 TYPICAL BITUMINOUS TRAIL
NOT TO SCALE

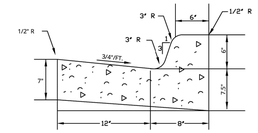

B-612 CONCRETE CURB & GUTTER
MNDOT Standard Plate 7100H

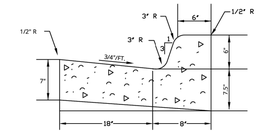

B-618 CONCRETE CURB & GUTTER
MNDOT Standard Plate 7100H

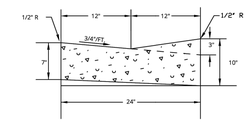

D-312 CONCRETE CURB & GUTTER

CONCRETE CURB & GUTTER

Plate No. ST-6

2023 STANDARD DETAIL PLATE

City of Blaine - Engineering Department

10801 Town Square Drive NE, Blaine, Minnesota 55449 763-785-6172 Fax 763-785-6139

1 C503 CURB AND GUTTER DETAIL
NOT TO SCALE

10 C503 PEDESTRAIN RAMP
NOT TO SCALE

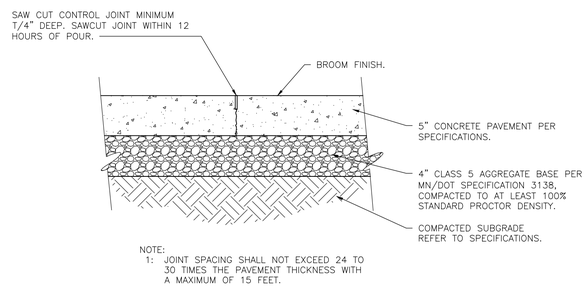

NOTE:
1: JOINT SPACING SHALL NOT EXCEED 24 TO 30 TIMES THE PAVEMENT THICKNESS WITH A MAXIMUM OF 15 FEET.

8 C503 CONCRETE PAVEMENT
NOT TO SCALE

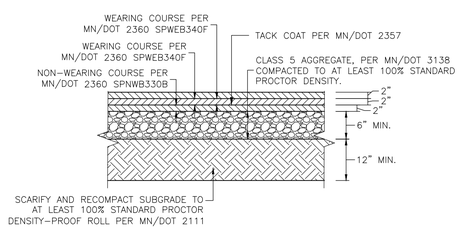

11 C503 COUNTY ROAD BITUMINOUS PAVEMENT
NOT TO SCALE

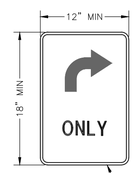

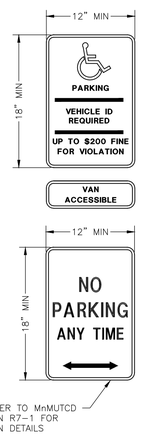

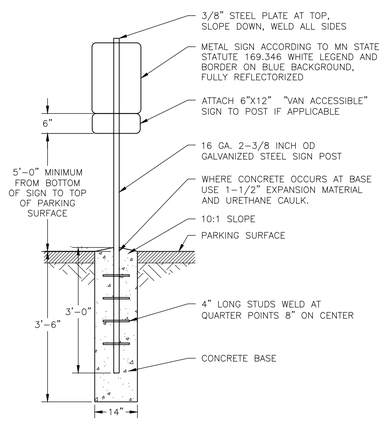

IMPERVIOUS SURFACE POST WITH SIGN

9 C503 SIGN AND POST
NOT TO SCALE

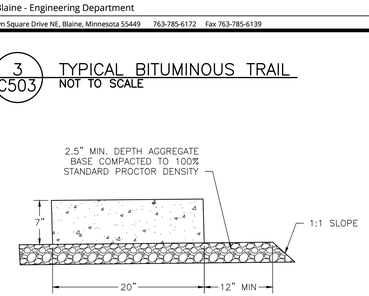

NOTE:
1. CURB SECTION IS TO SLOPE TOWARD PARKING LOT PER GRADING PLAN. TRANSITION INTO B612 CURBING USING NOSE-DOWN CURB SECTION.

4 C503 FLAT CURB/CONCRETE EDGER
NOT TO SCALE

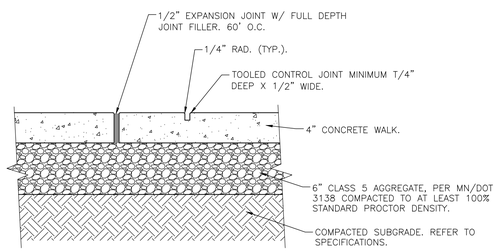

NOTE:
1: JOINT SPACING SHALL BE A MAXIMUM OF 6-FEET ON CENTER.

2 C503 CONCRETE SIDEWALK (TYP.)
NOT TO SCALE

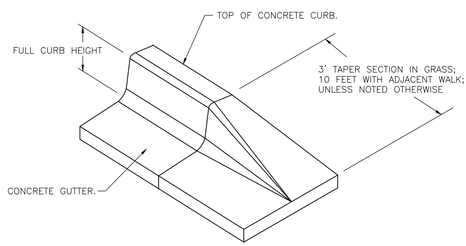

5 C503 NOSE-DOWN CURB SECTION
NOT TO SCALE

OWNER:
PINPOINT
Contact: Mike Breese
Phone: 612-978-3688
Email: mike@pinpointeg.com

little box
Address: 2744 Lyndale Ave S Minneapolis, MN 55408
Phone: 612-804-6314
Email: jnelson@littleboxinc.com

CIVIL & STRUCTURAL:
BKBM ENGINEERS
Address: 6120 Earle Brown Dr. Ste 700 Minneapolis, MN 55430
Civil Phone: 763-843-0427
Structure Phone: 763-843-0443
BKBM Project No. 23169.50

MEP:
EEA ERICKSEN ELLISON and Associates Inc.
Address: 305 2nd St NW Suite 105 New Brighton, MN 55112
Phone: 651-632-2300

LANDSCAPE:
DF/ DAMON FARBER LANDSCAPE ARCHITECTS
Address: 310 S 4th Ave. Ste 7050 Minneapolis, MN 55415
Phone: 763-257-7928

I hereby certify that this plan, specification or report was prepared by me or under my direct supervision and that I am a duly Licensed PROFESSIONAL ENGINEER *under the laws of the State of MN*

Kevin A. Bohl

Kevin A. Bohl

License Number: 52209 Date: 07/12/2023

SOUTH SIDE ENTERTAINMENT DISTRICT

A Development By:
PinPoint Equity Group

NO	DESCRIPTION	DATE

P

PROJ NO	
DATE	2023/07/12
DRAWN BY	WH
CHECK BY	NPA

CIVIL DETAILS

C503

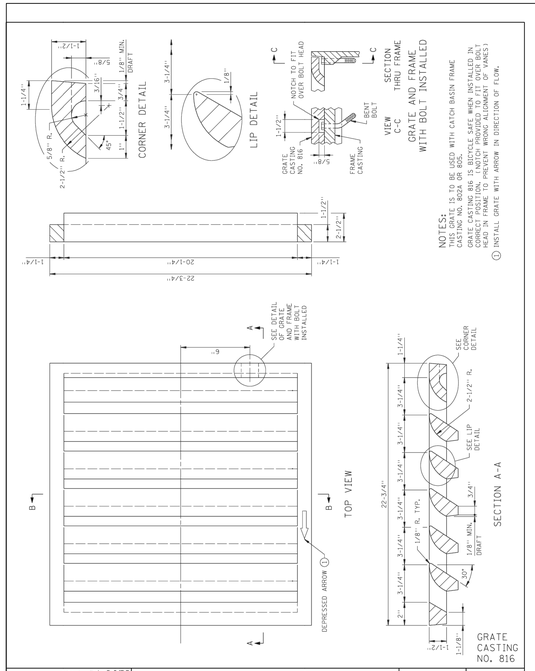

APPROVED Oct. 10, 1979 Director Construction and Engineering Development	STATE OF MINNESOTA DEPARTMENT OF TRANSPORTATION CATCH BASIN GRATE CASTING	SPECIFICATION REFERENCE 2506	STANDARD PLATE NO. 4154B

6 C504 CATCH BASIN GRATE CASTING
NOT TO SCALE

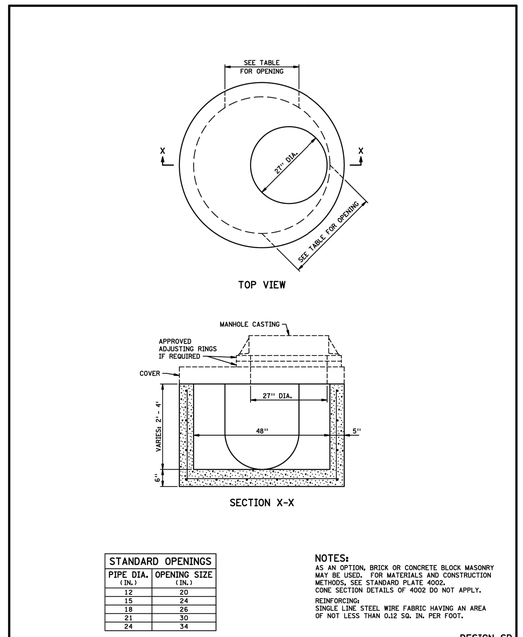

STANDARD OPENINGS	
PIPE DIA. (IN.)	OPENING SIZE (IN.)
12	20
15	24
18	26
21	30
24	34

NOTES:
AS AN OPTION, BRICK OR CONCRETE BLOCK MASONRY MAY BE USED. FOR MATERIALS AND CONSTRUCTION METHODS, SEE STANDARD PLATE 4002.
CONE SECTION DETAILS OF 4002 DO NOT APPLY.
REINFORCING:
SINGLE LINE STEEL WIRE FABRIC HAVING AN AREA OF NOT LESS THAN 0.12 SQ. IN. PER FOOT.

DESIGN SD

APPROVED FEB. 2, 1997 STATE DESIGN ENGINEER	STATE OF MINNESOTA DEPARTMENT OF TRANSPORTATION 48" DIA. PRECAST SHALLOW DEPTH CATCH BASIN	SPECIFICATION REFERENCE	STANDARD PLATE NO. 4024A

4 C504 48" CATCH BASIN
NOT TO SCALE

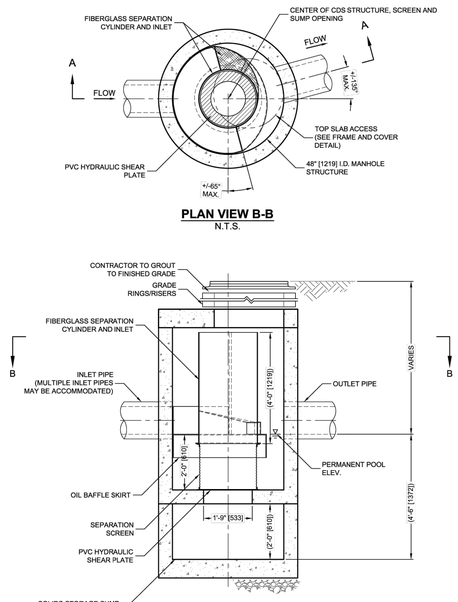

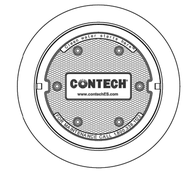

CDS2015-4-C DESIGN NOTES
THE STANDARD CDS2015-4-C CONFIGURATION IS SHOWN. ALTERNATE CONFIGURATIONS ARE AVAILABLE AND ARE LISTED BELOW. SOME CONFIGURATIONS MAY BE COMBINED TO SUIT SITE REQUIREMENTS.
CONFIGURATION DESCRIPTION
GRATED INLET ONLY (NO INLET PIPE)
GRATED INLET WITH INLET PIPE OR PIPES
CURB INLET ONLY (NO INLET PIPE)
CURB INLET WITH INLET PIPE OR PIPES
SEPARATE OIL BAFFLE (SINGLE INLET PIPE REQUIRED FOR THIS CONFIGURATION)
SEDIMENT WEIR FOR NJDEP / NJCAT CONFORMING UNITS

SITE SPECIFIC DATA REQUIREMENTS			
STRUCTURE ID			*
WATER QUALITY FLOW RATE (CFS OR L/s)			*
PEAK FLOW RATE (CFS OR L/s)			*
RETURN PERIOD OF PEAK FLOW (YRS)			*
SCREEN APERTURE (2400 OR 4700)			*
PIPE DATA:	I.E.	MATERIAL	DIAMETER
INLET PIPE 1	*	*	*
INLET PIPE 2	*	*	*
OUTLET PIPE	*	*	*
RIM ELEVATION			*
ANTI-FLOTATION BALLAST	WIDTH	HEIGHT	
	*	*	
NOTES/SPECIAL REQUIREMENTS:			
* PER ENGINEER OF RECORD			

GENERAL NOTES
1. CONTECH TO PROVIDE ALL MATERIALS UNLESS NOTED OTHERWISE.
2. DIMENSIONS MARKED WITH ( ) ARE REFERENCE DIMENSIONS. ACTUAL DIMENSIONS MAY VARY.
3. FOR FABRICATION DRAWINGS WITH DETAILED STRUCTURE DIMENSIONS AND WEIGHTS, PLEASE CONTACT YOUR CONTECH ENGINEERED SOLUTIONS LLC REPRESENTATIVE. www.contechES.com
4. CDS WATER QUALITY STRUCTURE SHALL BE IN ACCORDANCE WITH ALL DESIGN DATA AND INFORMATION CONTAINED IN THIS DRAWING.
5. STRUCTURE SHALL MEET AASHTO HS20 AND CASTINGS SHALL MEET HS20 (AASHTO M 306) LOAD RATING, ASSUMING GROUNDWATER ELEVATION AT, OR BELOW, THE OUTLET PIPE INVERT ELEVATION. ENGINEER OF RECORD TO CONFIRM ACTUAL GROUNDWATER ELEVATION.
6. PVC HYDRAULIC SHEAR PLATE IS PLACED ON SHELF AT BOTTOM OF SCREEN CYLINDER. REMOVE AND REPLACE AS NECESSARY DURING MAINTENANCE CLEANING.

INSTALLATION NOTES
A. ANY SUB-BASE, BACKFILL DEPTH, AND/OR ANTI-FLOTATION PROVISIONS ARE SITE-SPECIFIC DESIGN CONSIDERATIONS AND SHALL BE SPECIFIED BY ENGINEER OF RECORD.
B. CONTRACTOR TO PROVIDE EQUIPMENT WITH SUFFICIENT LIFTING AND REACH CAPACITY TO LIFT AND SET THE CDS MANHOLE STRUCTURE (LIFTING CLUTCHES PROVIDED).
C. CONTRACTOR TO ADD JOINT SEALANT BETWEEN ALL STRUCTURE SECTIONS, AND ASSEMBLE STRUCTURE.
D. CONTRACTOR TO PROVIDE, INSTALL, AND GROUT PIPES. MATCH PIPE INVERTS WITH ELEVATIONS SHOWN.
E. CONTRACTOR TO TAKE APPROPRIATE MEASURES TO ASSURE UNIT IS WATER TIGHT, HOLDING WATER TO FLOWLINE INVERT MINIMUM. IT IS SUGGESTED THAT ALL JOINTS BELOW PIPE INVERTS ARE GROUTED.

CONTECH ENGINEERED SOLUTIONS LLC
www.contechES.com
9025 Centre Pointe Dr., Suite 400, West Chester, OH 45069
800-338-1122 513-645-7000 513-645-7993 FAX

CDS2015-4-C
INLINE CDS
STANDARD DETAIL

C:\USERS\BCH\ACHTER\DESKTOP\CDS DETAILS 180 MICRON SUPNOVA\CAD\CDS2015-4-C(TL).DWG 9/18/2014 5:18 PM

1 C504 SUMP MANHOLE W/ INLINE CDS 2015-4-C
NOT TO SCALE

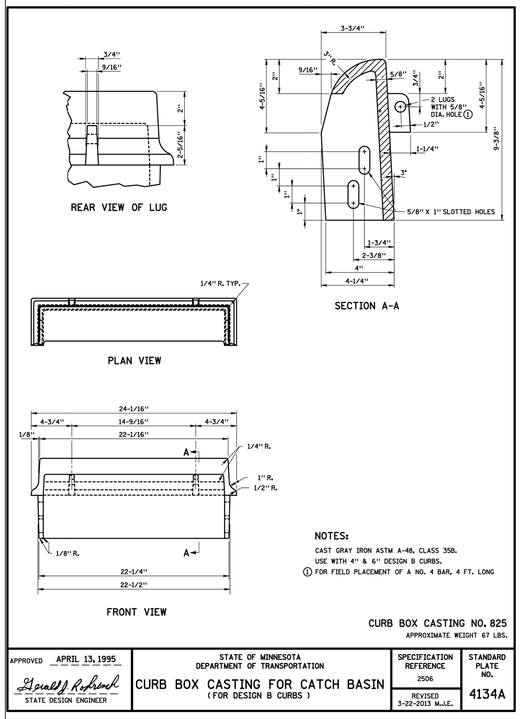

NOTES:
CAST GRAY IRON ASTM A-48, CLASS 35B.
USE WITH 4" & 6" DESIGN B CURBS.
① FOR FIELD PLACEMENT OF A NO. 4 BAR, 4 FT. LONG

CURB BOX CASTING NO. 825
APPROXIMATE WEIGHT 67 LBS.

APPROVED APRIL 13, 1995 STATE DESIGN ENGINEER	STATE OF MINNESOTA DEPARTMENT OF TRANSPORTATION CURB BOX CASTING FOR CATCH BASIN (FOR DESIGN B CURBS)	SPECIFICATION REFERENCE 2506 REVISED 3-22-2013 M.J.E.	STANDARD PLATE NO. 4134A

7 C504 CURB BOX CASTING FOR CATCH BASIN
NOT TO SCALE

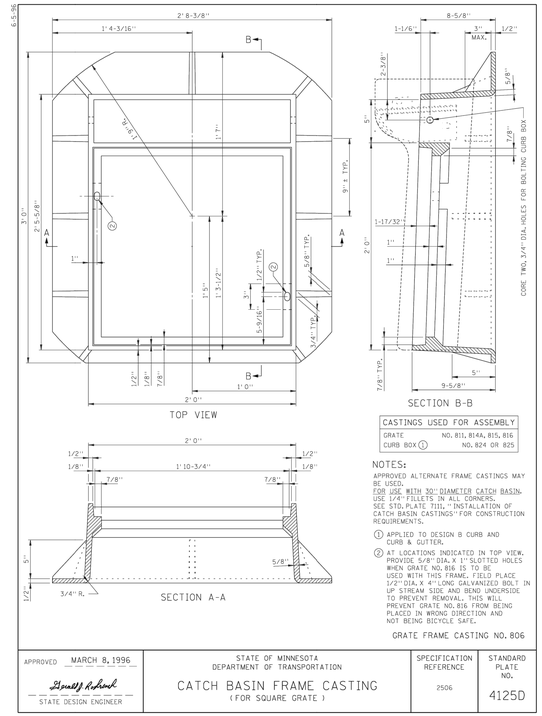

CASTINGS USED FOR ASSEMBLY	
GRATE	NO. B14A, B15, B16
CURB BOX ①	NO. 824 OR 825

NOTES:
APPROVED ALTERNATE FRAME CASTINGS MAY BE USED.
FOR USE WITH 30" DIAMETER CATCH BASIN. USE 1/4" FILLETS IN ALL CORNERS. SEE STD. PLATE 1311, "INSTALLATION OF CATCH BASIN CASTINGS" FOR CONSTRUCTION REQUIREMENTS.
① APPLIED TO DESIGN B CURB AND CURB & GUTTER.
② AT LOCATIONS INDICATED IN TOP VIEW. PROVIDE 5/8" DIA. X 1" SLOTTED HOLES WHEN GRATE NO. 816 IS TO BE USED WITH THIS FRAME. FIELD PLACE 1/2" DIA. X 4" LONG GALVANIZED BOLT IN UP STREAM SIDE AND BEND UNDERSIDE TO PREVENT REMOVAL. THIS WILL PREVENT GRATE NO. 816 FROM BEING PLACED IN WRONG DIRECTION AND NOT BEING BICYCLE SAFE.

GRATE FRAME CASTING NO. 806

APPROVED MARCH 8, 1996 STATE DESIGN ENGINEER	STATE OF MINNESOTA DEPARTMENT OF TRANSPORTATION CATCH BASIN FRAME CASTING (FOR SQUARE GRATE)	SPECIFICATION REFERENCE 2506	STANDARD PLATE NO. 4125D

5 C504 CATCH BASIN FRAME CASTING
NOT TO SCALE

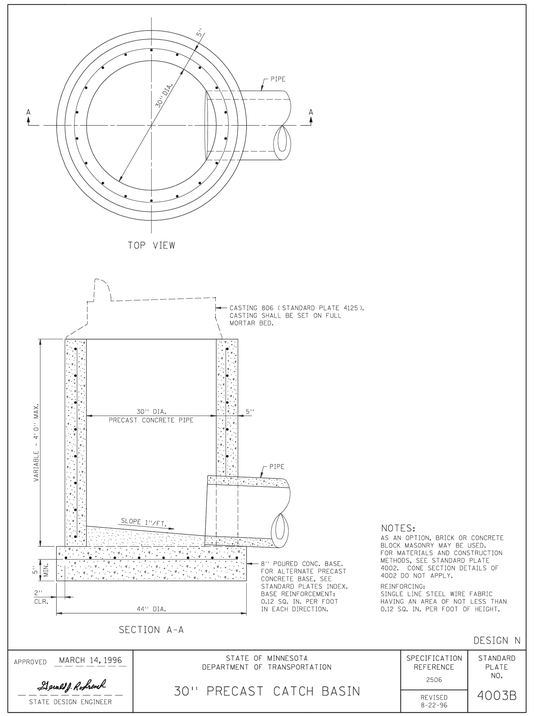

NOTES:
AS AN OPTION, BRICK OR CONCRETE BLOCK MASONRY MAY BE USED. FOR MATERIALS AND CONSTRUCTION METHODS, SEE STANDARD PLATE 4002. CONE SECTION DETAILS OF 4002 DO NOT APPLY.
REINFORCING:
SINGLE LINE STEEL WIRE FABRIC HAVING AN AREA OF NOT LESS THAN 0.12 SQ. IN. PER FOOT OF HEIGHT.

DESIGN N

APPROVED MARCH 14, 1996 STATE DESIGN ENGINEER	STATE OF MINNESOTA DEPARTMENT OF TRANSPORTATION 30" PRECAST CATCH BASIN	SPECIFICATION REFERENCE 2506 REVISED 8-22-96	STANDARD PLATE NO. 4003B

3 C504 30" CATCH BASIN
NOT TO SCALE

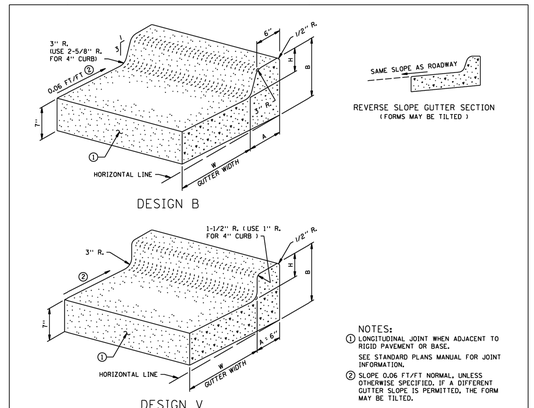

DESIGN B			W = 12"		W = 18"		W = 24"		W = 30"		W = 36"	
DIMENSIONS			CONCRETE		CONCRETE		CONCRETE		CONCRETE		CONCRETE	
H	A	B	DESIGN NO.	CU. YDS. PER LIN. FT. / CU. YD.	DESIGN NO.	CU. YDS. PER LIN. FT. / CU. YD.	DESIGN NO.	CU. YDS. PER LIN. FT. / CU. YD.	DESIGN NO.	CU. YDS. PER LIN. FT. / CU. YD.	DESIGN NO.	CU. YDS. PER LIN. FT. / CU. YD.
4	7-3/8"	11-1/2"	B412	0.0421 / 23.8	B418	0.0529 / 18.9	B424	0.0637 / 15.7	B430	0.0745 / 13.4	B436	0.0853 / 11.7
6	8"	13-1/2"	B612	0.0474 / 21.1	B618	0.0585 / 17.2	B624	0.0690 / 14.5	B630	0.0798 / 12.5	B636	0.0906 / 11.0
8	8-5/8"	15-1/2"	B812	0.0529 / 18.9	B818	0.0637 / 15.7	B824	0.0745 / 13.4	B830	0.0853 / 11.7	B836	0.0962 / 10.4
9	9"	16-5/8"	B912	0.0559 / 17.9	B918	0.0667 / 15.0	B924	0.0775 / 12.9	B930	0.0883 / 11.3	B936	0.0991 / 10.1
10	9-3/8"	17-5/8"	B1012	0.0589 / 17.0	B1018	0.0697 / 14.4	B1024	0.0805 / 12.4	B1030	0.0913 / 11.0	B1036	0.1021 / 9.8

DESIGN V			W = 12"		W = 18"		W = 24"		W = 30"		W = 36"	
DIMENSIONS			CONCRETE		CONCRETE		CONCRETE		CONCRETE		CONCRETE	
H	A	B	DESIGN NO.	CU. YDS. PER LIN. FT. / CU. YD.	DESIGN NO.	CU. YDS. PER LIN. FT. / CU. YD.	DESIGN NO.	CU. YDS. PER LIN. FT. / CU. YD.	DESIGN NO.	CU. YDS. PER LIN. FT. / CU. YD.	DESIGN NO.	CU. YDS. PER LIN. FT. / CU. YD.
4	6"	11-3/8"	V412	0.0396 / 25.3	V418	0.0504 / 19.9	V424	0.0612 / 16.4	V430	0.0720 / 13.9	V436	0.0828 / 12.1
6	6"	13-3/8"	V612	0.0426 / 23.5	V618	0.0534 / 18.7	V624	0.0642 / 15.6	V630	0.0750 / 13.4	V636	0.0858 / 11.7
8	6"	15-3/8"	V812	0.0457 / 21.9	V818	0.0565 / 17.7	V824	0.0673 / 14.9	V830	0.0781 / 12.8	V836	0.0889 / 11.3
9	6"	16-3/8"	V912	0.0472 / 21.2	V918	0.0580 / 17.2	V924	0.0688 / 14.5	V930	0.0796 / 12.6	V936	0.0904 / 11.1
10	6"	17-3/8"	V1012	0.0487 / 20.5	V1018	0.0595 / 16.8	V1024	0.0703 / 14.2	V1030	0.0811 / 12.4	V1036	0.0919 / 10.9

APPROVED MARCH 11, 1994 ACTING STATE DESIGN ENGINEER	STATE OF MINNESOTA DEPARTMENT OF TRANSPORTATION CONCRETE CURB AND GUTTER DESIGN B AND DESIGN V	SPECIFICATION REFERENCE 2531 REVISION DATE 2-28-05	STANDARD PLATE NO. 7100H

2 C504 B424 CONCRETE CURB AND GUTTER
NOT TO SCALE

OWNER:
PINPOINT
Contact: Mike Breese
Phone: 612-978-3688
Email: mike@pinpointeg.com

little box
Address: 2744 Lyndale Ave S Minneapolis, MN 55408
Phone: 612-804-6314
Email: jnelson@littleboxinc.com

CIVIL & STRUCTURAL:
BKBM ENGINEERS
Address: 6120 Earle Brown Dr. Ste 700 Minneapolis, MN 55430
Civil Phone: 763-843-0427
Structure Phone: 763-843-0443
BKBM Project No. 23169.50

MEP:
EEA ERICKSEN ELLISON and Associates Inc.
Address: 305 2nd St NW Suite 105 New Brighton, MN 55112
Phone: 651-632-2300

LANDSCAPE:
DF/ DAMON FARBER LANDSCAPE ARCHITECTS
Address: 310 S 4th Ave. Ste 7050 Minneapolis, MN 55415
Phone: 763-257-7928

I hereby certify that this plan, specification or report was prepared by me or under my direct supervision and that I am a duly Licensed PROFESSIONAL ENGINEER *under the laws of the State of MN*

Kevin A. Bohl
Kevin A. Bohl
License Number: 52209 Date: 07/12/2023

SOUTH SIDE ENTERTAINMENT DISTRICT

A Development By:
PinPoint Equity Group

NO	DESCRIPTION	DATE

P

PROJ NO	
DATE	2023/07/12
DRAWN BY	WH
CHECK BY	NPA

CIVIL DETAILS

C504

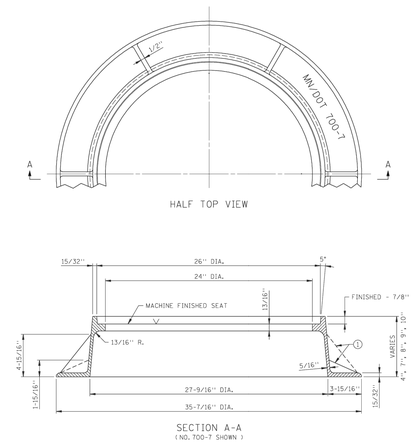

NOTES:
THIS RING CASTING TO BE USED IN CONJUNCTION WITH ANY OF THE FOLLOWING CASTINGS:
MANHOLE COVER NO. 715 OR NO. 716
MANHOLE OR CATCH BASIN GRATES NO. 720 OR NO. 721 .
1 ALTERNATING GUSSETS (3 EACH).

4" CASTING NO. 700-4 (98 LBS.)
7" CASTING NO. 700-7 (118 LBS.)
8" CASTING NO. 700-8
9" CASTING NO. 700-9
10" CASTING NO. 700-10

APPROVED OCTOBER 25, 1996	STATE OF MINNESOTA DEPARTMENT OF TRANSPORTATION	SPECIFICATION REFERENCE	STANDARD PLATE NO.
STATE DESIGN ENGINEER	RING CASTING FOR MANHOLE OR CATCH BASIN	2506	4101D

1 / C505 CASTING FRAME 700-7
NOT TO SCALE

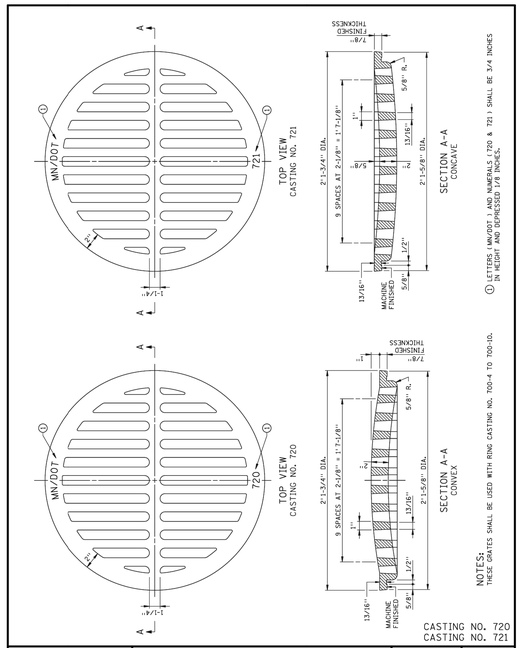

APPROVED Oct. 1, 1966	STATE OF MINNESOTA DEPARTMENT OF TRANSPORTATION	SPECIFICATION REFERENCE	STANDARD PLATE NO.
W. A. Ebern ASSISTANT COMMISSIONER ENGINEERING STANDARDS	SPECIAL GRATE CASTINGS FOR CATCH BASIN CONVEX AND CONCAVE	2506 REVISED 9-13-2016 M.J.E.	4140D

2 / C505 CONVEX CASTING NO. 720
NOT TO SCALE

OWNER:
PINPOINT
Contact: Mike Breese
Phone: 612-978-3688
Email: mike@pinpointeg.com

little box
Address: 2744 Lyndale Ave S
Minneapolis, MN 55408
Phone: 612-804-6314
Email: jnelson@littleboxinc.com

CIVIL & STRUCTURAL:
BKBM ENGINEERS
Address: 6120 Earle Brown Dr. Ste 700
Minneapolis, MN 55430
Civil Phone: 763-843-0427
Structure Phone: 763-843-0443
BKBM Project No. 23169.50

MEP:
EEA ERICKSEN ELLISON and Associates Inc.
Address: 305 2nd St NW Suite 105
New Brighton, MN 55112
Phone: 651-632-2300

LANDSCAPE:
DF/ DAMON FARBER LANDSCAPE ARCHITECTS
Address: 310 S 4th Ave. Ste 7050
Minneapolis, MN 55415
Phone: 763-257-7928

I hereby certify that this plan, specification or report was prepared by me or under my direct supervision and that I am a duly Licensed PROFESSIONAL ENGINEER *under the laws of the State of MN*

Kevin A. Bohl

Kevin A. Bohl

License Number: 52209 Date: 07/12/2023

SOUTH SIDE ENTERTAINMENT DISTRICT

A Development By:
PinPoint Equity Group

NO	DESCRIPTION	DATE

P

PROJ NO	
DATE	2023/07/12
DRAWN BY	WH
CHECK BY	NPA

CIVIL DETAILS

C505

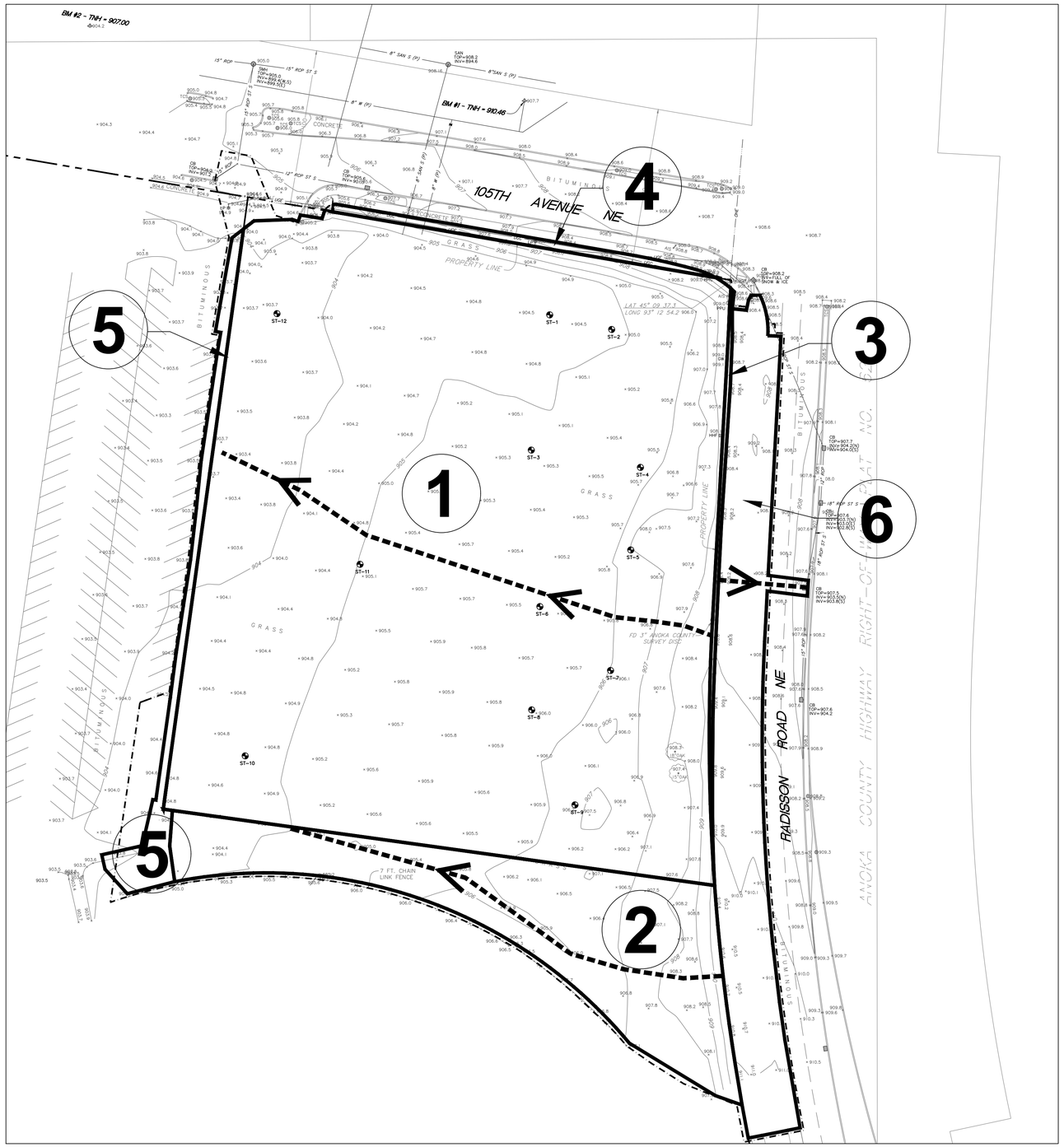

1 C600 EXISTING CONDITIONS
1" = 40'

PROJECT NARRATIVE

EXISTING SITE DESCRIPTION -- THE EXISTING SITE IS LOCATED IN THE CITY OF BLAINE IS APPROXIMATE 2.97 ACRES IN SIZE. THERE IS CURRENTLY ON SITE A SOCCER FIELD AND NO EXISTING STORMWATER MANAGEMENT DEVICES. THE SITE GENERALLY DRAINS TO THE WEST.

PROPOSE SITE DESCRIPTION -- THE PROPOSED SITE CONSISTS OF A RESTAURANT BUILDING, A RETAIL BUILDING, PARKING LOT, AND DRIVE ENTRANCE OFF OF RADISSON ROAD NE. THE INCREASE IN IMPERVIOUS SURFACES IS APPROXIMATELY 2.52 ACRES. THE PROPOSED BUILDINGS AND PARKING LOT WILL DRAIN TO AN FILTRATION SYSTEM ON THE WEST SIDE OF THE SITE. THE FILTRATION SYSTEM'S PRIMARY OUTLET DRAINS TO THE EXISTING STORM SEWER IN 105TH AVE NE.

N

40' 20' 0 40' 80'
SCALE 1" = 40'

EXISTING DRAINAGE AREAS

DRAINAGE AREA	IMPERVIOUS AREA (ACRES)	PERVIOUS AREA (ACRES)	TOTAL AREA (ACRES)	Q OUT (CFS) STORM EVENT			
				2-YEAR (2.84")	10-YEAR (4.23")	100-YEAR (7.24")	ROUTING
1	0.02	2.94	2.96	0.70	3.05	10.55	SHEET FLOWS WEST OFFSITE
2	0.00	0.49	0.49	0.12	0.50	1.75	SHEET FLOWS WEST OFFSITE
3	0.00	0.02	0.02	0.01	0.03	0.11	SHEET FLOWS WEST OFFSITE
4	0.00	0.03	0.03	0.01	0.05	0.16	SHEET FLOWS WEST OFFSITE
5	0.01	0.07	0.08	0.07	0.18	0.49	SHEET FLOWS WEST OFFSITE
6	0.20	0.20	0.40	0.94	1.64	3.36	DRAINS EAST TO COUNTY STORM SEWER
TOTAL	0.23	3.74	3.97	1.85	5.45	16.42	

PROPOSED DRAINAGE AREAS

DRAINAGE AREA	IMPERVIOUS AREA (ACRES)	PERVIOUS AREA (ACRES)	TOTAL AREA (ACRES)	Q OUT (CFS) STORM EVENT			
				2-YEAR (2.84")	10-YEAR (4.23")	100-YEAR (7.24")	ROUTING
1	2.09	0.64	2.73	–	–	–	DRAINS TO FILTRATION BASIN
2	0.07	0.16	0.23	0.37	0.74	1.69	SHEET FLOWS WEST OFFSITE
3	0.27	0.12	0.39	–	–	–	DRAINS TO FILTRATION BASIN
4	0.02	0.02	0.04	–	–	–	DRAINS TO FILTRATION BASIN
5	0.00	0.03	0.03	0.01	0.05	0.16	SHEET FLOWS WEST OFFSITE
6	0.05	0.13	0.18	0.27	0.55	1.32	SHEET FLOWS WEST OFFSITE
7	0.25	0.12	0.37	1.14	1.86	3.53	DRAINS EAST TO COUNTY STORM SEWER
FILTRATION SYSTEM	–	–	–	0.42	0.43	2.89	DRAINS NORTH TO CITY STORM SEWER
TOTAL	2.75	1.22	3.97	2.21	3.63	9.59	

STORMWATER RUNOFF SUMMARY

	2-YR STORM (2.84") RUNOFF (CFS)	10-YR STORM (4.23") RUNOFF (CFS)	100-YR STORM (7.24") RUNOFF (CFS)
EXISTING SITE WEST	0.91	3.81	13.06
EXISTING SITE EAST	0.94	1.64	3.36
EXISTING SITE 105TH AVE	0.00	0.00	0.00
EXISTING SITE TOTAL	1.85	5.45	16.42
PROPOSED SITE WEST	0.65	1.34	3.17
PROPOSED SITE EAST	1.14	1.86	3.53
PROPOSED SITE 105TH AVE	0.42	0.43	2.89
PROPOSED SITE TOTAL	2.21	3.63	9.59

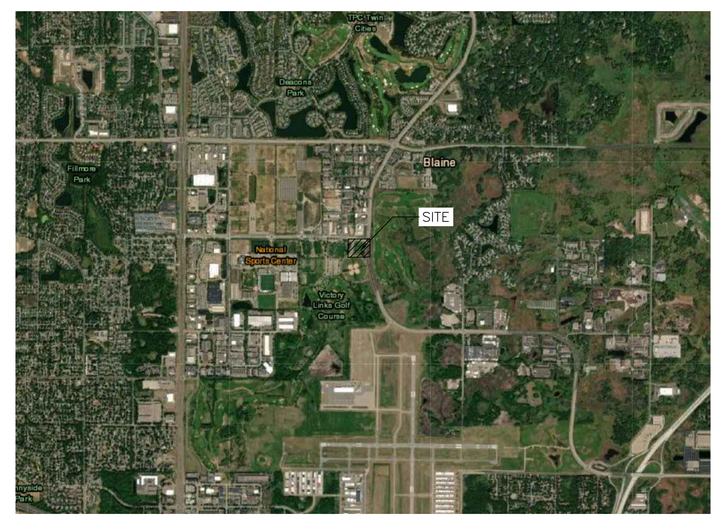

VICINITY MAP
BLAINE, MINNESOTA

OWNER:
PINPOINT
Contact: Mike Breese
Phone: 612-978-3688
Email: mike@pinpointeg.com

little box
Address: 2744 Lyndale Ave S
Minneapolis, MN 55408
Phone: 612-804-6314
Email: jnelson@littleboxinc.com

CIVIL & STRUCTURAL:
BKBM ENGINEERS
Address: 6120 Earle Brown Dr. Ste 700
Minneapolis, MN 55430
Civil Phone: 763-843-0427
Structure Phone: 763-843-0443
BKBM Project No. 23169.50

MEP:
EEA ERICKSEN ELLISON and Associates Inc.
Address: 305 2nd St NW Suite 105
New Brighton, MN 55112
Phone: 651-632-2300

LANDSCAPE:
DF/ DAMON FARBER LANDSCAPE ARCHITECTS
Address: 310 S 4th Ave. Ste 7050
Minneapolis, MN 55415
Phone: 763-257-7928

I hereby certify that this plan, specification or report was prepared by me or under my direct supervision and that I am a duly Licensed PROFESSIONAL ENGINEER *under the laws of the State of MN*

Kevin A. Bohl
License Number: 52209 Date: 07/12/2023

SOUTH SIDE ENTERTAINMENT DISTRICT

A Development By:
PinPoint Equity Group

NO	DESCRIPTION	DATE

P

PROJ NO	
DATE	2023/07/12
DRAWN BY	WH
CHECK BY	NPA

STORM SEWER POLLUTION PREVENTION PLAN - EXISTING CONDITIONS

C600

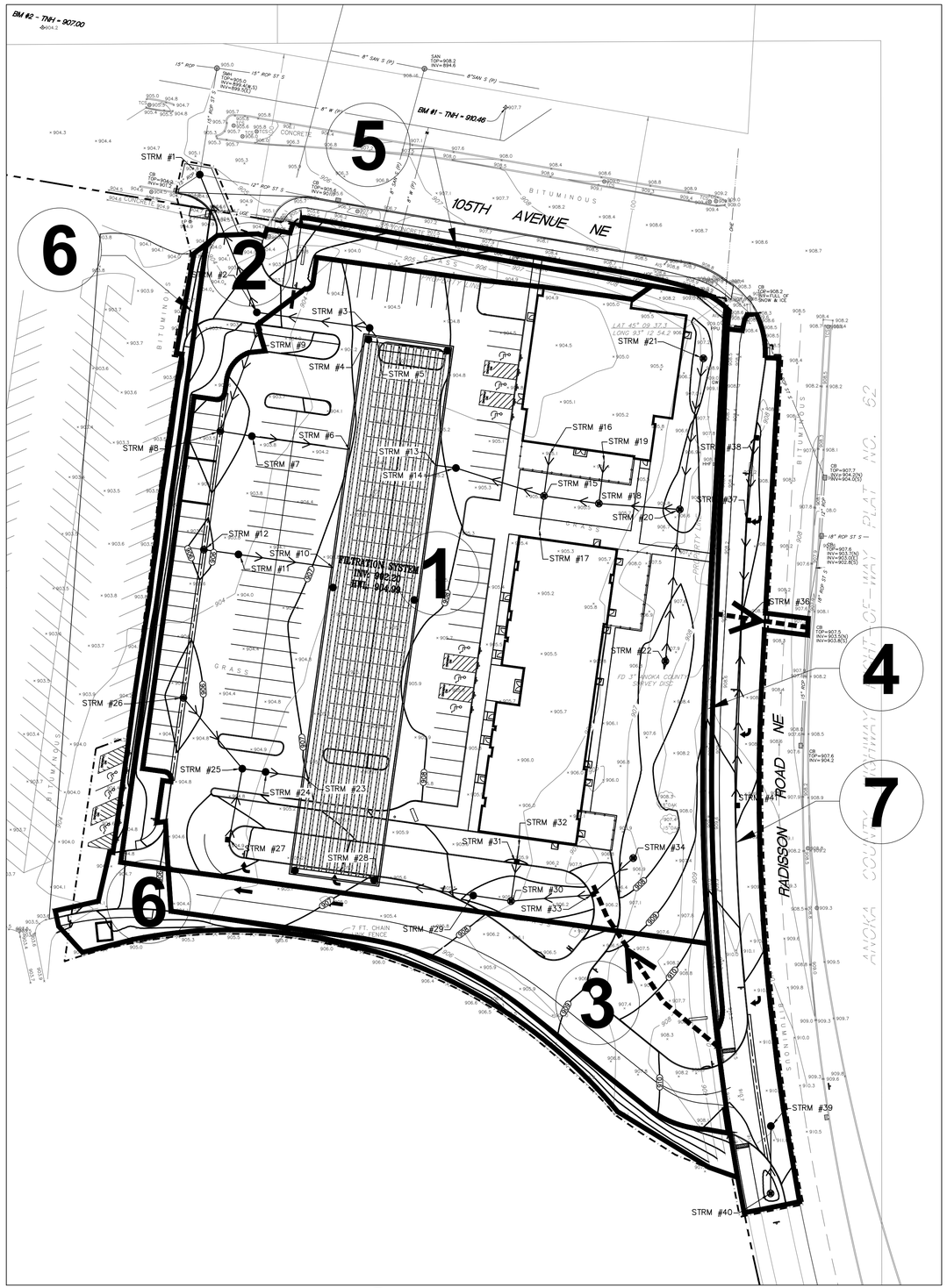

1 C601 PROPOSED CONDITIONS
1" = 40'

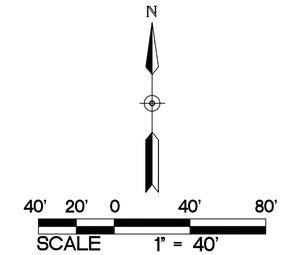

PORTABLE TOILET NOTES:

1. PORTABLE TOILETS POSE AN ENVIRONMENTAL HAZARD WHEN PLACED IN THE VICINITY OF STORM DRAINS OR BODIES OF WATER. PORTABLE TOILET CLEANING ACTIVITIES CAN ALSO GENERATE POLLUTANTS THAT CAN DEGRADE WATER QUALITY.
2. PORTABLE TOILET PLACEMENT:
   - 2.1. PLACE PORTABLE TOILETS ON FLAT STABLE GROUND WITH CLEAR ACCESS TO THE UNITS.
   - 2.2. LOCATE TOILETS A MINIMUM OF 20 FEET FROM ANY WATER BODY AND 10 FEET FROM ANY CURB AND GUTTER. IF UNFEASIBLE, AN EARTHERN BERM OR SAND BAG BERM SHALL BE PLACED AROUND THE UNIT FOR SPILL AND LEAK CONTAINMENT.
   - 2.3. AVOID PLACING TOILETS ON IMPERVIOUS SURFACES THAT WILL QUICKLY DRAIN TO STORM SEWERS.
   - 2.4. LOCATE TOILETS SO THAT EXPOSURE TO TRAFFIC AND MOVING EQUIPMENT IS MINIMIZED.
   - 2.5. SECURE TOILETS TO THE GROUND WITH STAKES OR CABLES.
   - 2.6. RINSE WATER FROM CLEANING ACTIVITIES SHALL NOT BE DISPOSED ON SITE.
3. REGULARLY CHECK TOILETS FOR DAMAGE, LEAKS AND SPILLS AS PART OF THE WEEKLY STORMWATER SITE INSPECTION.
4. OWNER IDENTIFICATION AND CONTACT INFORMATION SHALL BE DISPLAYED IN A PROMINENT LOCATION ON EACH UNIT.

NOTE:

THE STORM WATER POLLUTION PREVENTION PLAN FOR THIS PROJECT INCLUDES THE CIVIL ENGINEERING PLANS AND THE PROJECT MANUAL.

CONTRACTOR SHALL SUPPLY CONSTRUCTION PHASING NARRATIVE, ESTIMATED PRELIMINARY QUANTITIES OF ALL EROSION PREVENTION AND SEDIMENT CONTROL BMP'S ANTICIPATED AT THE START OF THE PROJECT AND FOR THE LIFE OF THE PROJECT, AND LOCATION OF AREAS WHERE CONSTRUCTION WILL BE PHASED TO MINIMIZE DURATION OF EXPOSED SOIL AREAS. CONTRACTOR IS TO REVIEW MINNESOTA POLLUTION CONTROL AGENCY'S INSTRUCTIONS FOR THE APPLICATION FOR MINNESOTA'S NPDES/SDS GENERAL STORMWATER PERMIT FOR CONSTRUCTION ACTIVITY PRIOR TO SUBMITTING APPLICATION.

INSPECTIONS

EXPOSED SOIL AREAS: ONCE EVERY 7 DAYS AND WITHIN 24 HOURS FOLLOWING A 1/2 INCH OVER 24 HOURS RAIN EVENT.

STABILIZED AREAS: ONCE EVERY 30 DAYS.

FROZEN GROUND: AS SOON AS RUNOFF OCCURS OR PRIOR TO RESUMING CONSTRUCTION.

RECORDS: A COPY OF THE GRADING, DRAINAGE EROSION CONTROL PLAN AND WATERSHED DATA & SWPPP PLANS AS WELL AS THE INSPECTIONS/MAINTENANCE LOGS ARE TO BE KEPT EITHER IN THE FIELD OFFICE, INSPECTOR'S VEHICLE, OR CONTRACTOR'S VEHICLE.

SPECIAL AND IMPAIRED WATERS

THESE SPECIAL AND IMPAIRED WATERS ARE LOCATED WITHIN ONE MILE (AERIAL RADIUS) OF THE PROJECT LIMITS AND RECEIVE RUNOFF FROM THE PROJECT SITE. DUE TO THE PROXIMITY OF THESE SPECIAL AND IMPAIRED WATERS, THE BMPS DESCRIBED IN SECTION 23 OF THE NPDES PERMIT WILL APPLY TO ALL AREAS OF THE SITE.

WATERBODY	IMPAIRMENT(S)
NONE	NA

MINIMUM ESTIMATED QUANTITIES FOR EROSION CONTROL

ITEM DESCRIPTION	ESTIMATED QUANTITY	
DRAINAGE STRUCT. INLET FILTER	18	EACH
ROCK CONSTRUCTION ENTRANCE	1	EACH
CONCRETE WASHOUT	1	EACH
SILT FENCE	434	LF
BIO LOG	1054	LF
EROSION CONTROL BLANKET	1474	SY

NOTE: QUANTITIES SHOWN ARE THE MINIMUM REQUIRED, ADDITIONAL QUANTITIES MAY BE NEEDED IF REQUIRED BY THE MPCA, WATERSHED DISTRICT, OR CITY. CONTRACTOR IS RESPONSIBLE FOR FINAL DETERMINATION OF QUANTITIES PRIOR TO CONSTRUCTION.

HANDLING AND STORAGE OF HAZARDOUS MATERIALS:

IF THE CONTRACTOR INTENDS TO USE POLYMERS, FLOCCULANTS, OR OTHER SEDIMENTATION TREATMENT CHEMICALS ON THE PROJECT SITE, THE CONTRACTOR MUST COMPLY WITH THE FOLLOWING MINIMUM REQUIREMENTS:

1. THE CONTRACTOR MUST USE CONVENTIONAL EROSION AND SEDIMENT CONTROLS PRIOR TO CHEMICAL ADDITION TO ENSURE EFFECTIVE TREATMENT. CHEMICALS MAY ONLY BE APPLIED WHERE TREATED STORMWATER IS DIRECTED TO A SEDIMENT CONTROL SYSTEM WHICH ALLOWS FOR FILTRATION OR SETTLEMENT OF THE FLOC PRIOR TO DISCHARGE.
2. CHEMICALS MUST BE SELECTED THAT ARE APPROPRIATELY SUITED TO THE TYPES OF SOILS LIKELY TO BE EXPOSED DURING CONSTRUCTION, AND TO THE EXPECTED TURBIDITY, PH, AND FLOW RATE OF STORMWATER FLOWING INTO THE CHEMICAL TREATMENT SYSTEM OR AREA.
3. CHEMICALS MUST BE USED IN ACCORDANCE WITH ACCEPTED ENGINEERING PRACTICES, AND WITH DOSING SPECIFICATIONS AND SEDIMENT REMOVAL DESIGN SPECIFICATIONS PROVIDED BY THE MANUFACTURER OR PROVIDER/SUPPLIER OF THE APPLICABLE CHEMICALS.

ON-SITE FUEL TANKS REQUIRE SECONDARY CONTAINMENT AS REQUIRED BY THE PERMIT. PORTABLE FUEL TRUCKS SHALL HAVE THEIR SPILL KITS AVAILABLE DURING FUELING. SPILLS GREATER THAN 5 GALLONS MUST BE REPORTED TO THE PROPER AUTHORITIES.

CONSTRUCTION ACTIVITY EROSION PREVENTION PRACTICES

CONTRACTOR SHALL STABILIZE ALL EXPOSED SOIL AREAS (INCLUDING STOCKPILES). STABILIZATION MUST BE INITIATED IMMEDIATELY TO LIMIT SOIL EROSION WHENEVER ANY CONSTRUCTION ACTIVITY HAS PERMANENTLY OR TEMPORARILY CEASED ON ANY PORTION OF THE SITE AND WILL NOT RESUME FOR A PERIOD EXCEEDING 7 CALENDAR DAYS. STABILIZATION MUST BE COMPLETED NO LATER THAN 7 CALENDAR DAYS AFTER THE CONSTRUCTION ACTIVITY IN THAT PORTION OF THE SITE HAS TEMPORARILY OR PERMANENTLY CEASED.

FOR PUBLIC WATER THAT THE DNR HAS PROMULGATED "WORK IN WATER RESTRICTIONS" DURING SPECIFIED FISH SPAWNING TIME FRAMES, ALL EXPOSED SOIL AREAS THAT ARE WITHIN 200 FEET OF THE WATER'S EDGE, AND DRAIN TO THESE WATERS MUST COMPLETE THE STABILIZATION ACTIVES WITHIN 24 HOURS DURING THE RESTRICTION PERIOD.

PIPE OUTLETS MUST BE PROVIDED WITH TEMPORARY OR PERMANENT ENERGY DISSIPATION WITHIN 24-HOURS AFTER CONNECTION TO A SURFACE WATER.

SEDIMENT CONTROL MEASURES MUST BE INSTALLED ON ALL DOWN GRADIENT PERIMETERS BEFORE ANY UPGRADIENT LAND DISTURBING ACTIVITIES BEGIN.

SEDIMENT AND EROSION CONTROL MAINTENANCE

PERIMETER SEDIMENT CONTROL PRACTICES: WHEN SEDIMENT REACHES 1/3 THE HEIGHT OF THE BMP, THE SEDIMENT MUST BE REMOVED WITHIN 24 HOURS. IF PERIMETER SEDIMENT CONTROL HAS BEEN DAMAGED OR IS NOT FUNCTIONING PROPERLY, IT MUST BE REPAIRED AND/OR REPLACED WITHIN 24 HOURS. PERIMETER BMP MEASURES MAY INCLUDE SILT FENCING.

CONSTRUCTION SITE VEHICLE EXIT LOCATIONS: ALL TRACKED SEDIMENT ONTO PAVED SURFACES MUST BE REMOVED WITHIN 24 HOURS OF DISCOVERY OR MORE FREQUENTLY IF REQUIRED BY CITY OR WATERSHED.

CONSTRUCTION SITE DEWATERING:
THE CONTRACTOR SHALL BE RESPONSIBLE FOR OBTAINING ALL DEWATERING PERMITS. DISCHARGE FROM ALL DEWATERING OPERATIONS SHALL BE DIRECTED TO ON-SITE DEPRESSIONS. NO DISCHARGE FROM DEWATERING OPERATIONS SHALL BE DIRECTED OFF-SITE TOWARDS A WATER OF THE STATE.

GRADING & SOILS

BASED ON SOIL BORING(S) PROVIDED BY BRAUN INTERTEC SOILS TYPICALLY FOUND ON THIS PROJECT ARE: SM, SP-SM, SP

REFER TO THE GEOTECHNICAL REPORT FOR ADDITIONAL INFORMATION.

OTHER NOTES:

1. LONG TERM MAINTENANCE OF THE SITE WILL BE PERFORMED BY THE OWNER, MINNEAPOLIS-SAINT PAUL METRO AIRPORT. INCLUDED MAINTENANCE FOR STORMWATER DEVICES SHALL BE:
   - 1.1. INSPECT SUMP CATCH BASINS ON A BIANNUAL BASIS, ONCE IN THE SPRING AND ONCE IN THE FALL
   - 1.2. CLEAN SUMP CATCH BASINS OF SEDIMENT AND DEBRIS ANNUALLY OR WHEN SEDIMENTS FILL $\frac{1}{3}$ OF THE STORAGE VOLUME.
   - 1.3. ADDITIONAL LONG TERM MAINTENANCE MEASURES INCLUDING REMOVAL OF TRASH AND DEBRIS FROM FILTRATION SYSTEM BOTTOMS AND OUTLETS.
2. THIS SWPPP WAS PREPARED BY PERSONNEL THAT ARE CERTIFIED IN THE DESIGN OF CONSTRUCTION SWPPPS. COPIES OF THE CERTIFICATIONS ARE ON FILE WITH BKBM AND ARE AVAILABLE UPON REQUEST.
3. THIS SWPPP DOCUMENT MUST BE AMENDED AS NECESSARY DURING CONSTRUCTION IN ORDER TO KEEP IT CURRENT WITH THE POLLUTANT CONTROL MEASURES UTILIZED AS THE SITE. THE SITE MAP SHOWING LOCATIONS OF ALL STORM WATER CONTROLS MUST BE POSTED ON THE SITE AND UPDATED TO REFLECT THE PROGRESS OF CONSTRUCTION.

POLLUTION PREVENTION MANAGEMENT MEASURES

SOLID WASTE DISPOSED PROPERLY; COMPLY WITH MPCA REQUIREMENTS.

HAZARDOUS WASTE STORED (SECONDARY CONTAINMENT, RESTRICTED ACCESS) AND DISPOSED IN COMPLIANCE WITH MPCA REQUIREMENTS.

NO EXTERNAL WASHING OF TRUCKS AND OTHER CONSTRUCTION ALLOWED ON-SITE.

CONCRETE WASHOUT ON-SITE: ALL LIQUID AND SOLID WASTES GENERATED BY CONCRETE WASHOUT OPERATIONS MUST BE CONTAINED IN A LEAK-PROOF CONTAINMENT FACILITY OR IMPERMEABLE LINER. A COMPACTED CLAY LINER THAT DOES NOT ALLOW LIQUIDS TO ENTER GROUND WATER IS CONSIDERED AN IMPERMEABLE LINER. THE LIQUID AND SOLID WASTES MUST NOT CONTACT THE GROUND, AND THERE MUST NOT BE RUNOFF FROM THE CONCRETE WASHOUT OPERATIONS OR AREAS. LIQUID AND SOLID WASTES MUST BE DISPOSED OF PROPERLY AND IN COMPLIANCE WITH MPCA REGULATIONS. A SIGN MUST BE INSTALLED ADJACENT TO EACH WASHOUT FACILITY TO INFORM CONCRETE EQUIPMENT OPERATORS TO UTILIZE THE PROPER FACILITIES. THE CONCRETE WASHOUT AREA INDICATED ON THE PLANS IS SHOWN IN AN APPROXIMATE LOCATION. PRIOR TO THE START OF CONSTRUCTION, THE CONTRACTOR SHALL DETERMINE THE EXACT LOCATION IN ACCORDANCE WITH MPCA REQUIREMENTS.

STORAGE HANDLING AND DISPOSAL OF CONSTRUCTION PRODUCTS, MATERIALS, AND WASTES:

BUILDING PRODUCTS THAT HAVE THE POTENTIAL TO LEACH POLLUTANTS MUST BE UNDER COVER.

PESTICIDES, HERBICIDES, INSECTICIDES, FERTILIZERS, TREATMENT CHEMICALS, AND LANDSCAPE MATERIALS MUST BE UNDER COVER.

HAZARDOUS MATERIALS, TOXIC WASTE (INCLUDING OIL, DIESEL FUEL, GASOLINE, HYDRAULIC FLUIDS, PAINT SOLVENTS, PETROLEUM-BASED PRODUCTS, WOOD PRESERVATIVES, ADDITIVES, CURING COMPOUNDS, AND ACIDS MUST BE PROPERLY STORED IN SEALED CONTAINERS TO PREVENT SPILLS, LEAKS, OR OTHER DISCHARGES.

FINAL STABILIZATION

STABILIZATION BY UNIFORM PERENNIAL VEGETATIVE COVER (70% DENSITY)

DRAINAGE DITCHES STABILIZED.

ALL TEMPORARY SYNTHETIC AND STRUCTURAL BMP'S REMOVED.

CLEAN OUT SEDIMENT FROM CONVEYANCES AND SEDIMENTATION BASINS (RETURN TO DESIGN CAPACITY).

MECHANICAL AND NON STORMWATER DISCHARGES, EXISTING AND PROPOSED

1. WATER LINE FLUSHING
2. LANDSCAPE IRRIGATION
3. DISCHARGE FROM POTABLE WATER SOURCES
4. FOUNDATION DRAINS
5. AIR CONDITIONING CONDENSATION

AGENCY CONTACTS

CITY OF BLAINE
ENGINEERING DEPARTMENT
PHONE: (763) 785-6172

MINNESOTA POLLUTION CONTROL AGENCY
PHONE: (651) 296-6300

COON CREEK WATERSHED DISTRICT
PHONE: (763) 755-0975

MINNEAPOLIS-SAINT PAUL METRO AIRPORT
6040 29TH AVE S
MINNEAPOLIS MN, 55450
PHONE: (763) 717-0001

NOTE:

THE CONTRACTOR MUST COMPLETE, SIGN, OBTAIN OWNERS SIGNATURE, PAY FEE, AND SEND IN THE NPDES PERMIT APPLICATION. CONTRACTOR SHALL PROVIDE A CERTIFIED EROSION CONTROL SUPERVISOR. SWPPP DOCUMENTATION, INCLUDING INSPECTION REPORTS SHALL BE RETAINED FOR A PERIOD OF THREE (3) YEARS. DESIGN CALCULATIONS ARE ON FILE AT BKBM.

THE OWNER AND CONTRACTOR ARE RESPONSIBLE FOR IMPLEMENTATION OF THE SWPPP AND INSTALLATION, INSPECTION, AND MAINTENANCE OF THE EROSION PREVENTION AND SEDIMENT CONTROL BMPS, BEFORE, DURING, AND AFTER CONSTRUCTION UNTIL THE NOTICE OF TERMINATION HAS BEEN FILED.

STOCKPILES:

ON-SITE STOCKPILES OF SOIL SHALL HAVE PERIMETER SEDIMENT CONTROL. STOCKPILES SHALL BE STABILIZED WITH BLANKETS, TARPS, OR HYDRO MULCH IF LEFT ON-SITE FOR MORE THAN 7 DAYS.

TEMPORARY SEDIMENT BASINS:

TEMPORARY SEDIMENT BASINS SHALL BE PROVIDED PER APPENDIX A, SECTION C.1.B OF THE MPCA GENERAL STORMWATER PERMIT.

ENGINEER ANTICIPATES THAT, PRIOR TO EXCAVATION FOR FILTRATION SYSTEM, CONTRACTOR WILL USE PROPOSED FILTRATION AREA AS TEMPORARY SEDIMENT BASINS. CONTRACTOR SHALL EXCAVATE TEMPORARY BASINS PRIOR TO USE. SURFACE WATER SHALL BE REMOVED BY SKIMMER DEVICE SUCH AS FAIRCLOTH SKIMMER OR THIRSTY DUCK, OR USING A PUMP WITH A FILTER. ALTERNATIVE TEMPORARY SEDIMENT BASINS SHALL BE APPROVED BY ENGINEER PRIOR TO USE.

SWPPP IMPLEMENTATION, INSTALLATION, INSPECTION, AND BMP MAINTENANCE SHALL BE PERFORMED BY THE CONTRACTOR.

NAME: _____

CERTIFICATION #:_____

DATE: _____

NOTE:

AN AS-BUILT SURVEY OF ALL FILTRATION SYSTEM, OUTLET STRUCTURES, SUMP CATCH BASINS, DRAIN TILE, ETC...) SHALL BE SUBMITTED TO COON CREEK WATERSHED DISTRICT PRIOR TO PROJECT CLOSEOUT. THE AS-BUILT SURVEY SHALL SHOW THAT THE FINAL CONSTRUCTED PRODUCT MATCHES THE PROJECT PLANS.

OWNER:
PINPOINT
Contact: Mike Breese
Phone: 612-978-3688
Email: mike@pinpointeg.com

little box
Address: 2744 Lyndale Ave S Minneapolis, MN 55408
Phone: 612-804-6314
Email: jnelson@littleboxinc.com

CIVIL & STRUCTURAL:
BKBM ENGINEERS
Address: 6120 Earle Brown Dr. Ste 700 Minneapolis, MN 55430
Civil Phone: 763-843-0427
Structure Phone: 763-843-0443
BKBM Project No. 23169.50

MEP:
EEA ERICKSEN ELLISON and Associates Inc.
Address: 305 2nd St NW Suite 105 New Brighton, MN 55112
Phone: 651-632-2300

LANDSCAPE:
DF/ DAMON FARBER LANDSCAPE ARCHITECTS
Address: 310 S 4th Ave. Ste 7050 Minneapolis, MN 55415
Phone: 763-257-7928

I hereby certify that this plan, specification or report was prepared by me or under my direct supervision and that I am a duly Licensed PROFESSIONAL ENGINEER *under the laws of the State of MN*

Kevin A. Bohl

Kevin A. Bohl
License Number: 52209 Date: 07/12/2023

SOUTH SIDE ENTERTAINMENT DISTRICT

A Development By:
PinPoint Equity Group

NO	DESCRIPTION	DATE

P

PROJ NO	
DATE	2023/07/12
DRAWN BY	WH
CHECK BY	NPA

STORM SEWER POLLUTION PREVENTION PLAN - PROPOSED CONDITIONS

C601