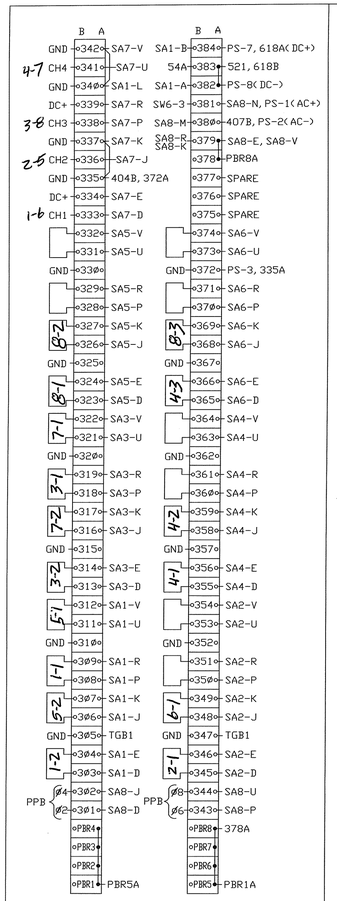

NOTE: 305, 310, 315, 320, 325, 330, 335, 340, 347, 352, 357, 362, 367 AND 372 ARE INTERCONNECTED BY THE WIEDMULLER MOUNTING RAIL.

JUMPERS 335A–337A AND 340A–342A, ARE TO BE ADDED AS NEEDED FOR EVP.

LOAD SWITCH PANEL ASSEMBLY

LS		1	2	3	4	5	6	7	8	9	10	11	12	13	14
CONT Ø		1	2	3	4	5	6	7	8	2P	4P	6P	8P		
PLAN Ø															
IN	GREEN / WALK	10	62A	69A	76A	82A	102A	109A	116A	122A	72A	85A	112A	125A	
	YELLOW/PED CLR	8	63A	70A	77A	83A	103A	110A	117A	123A	142B	144B	146B	148B	
	RED/DON'T WALK	6	64A	71A	78A	84A	104A	111A	118A	124A	73A	86A	113A	126A	
OUT	GREEN / WALK	7	201A	207A	213A	219A	225A	231A	237A	243A	249A	255A	261A	267A	
	YELLOW	5	FP1-13	FP2-13	FP3-13	FP4-13	FP5-13	FP6-13	FP7-13	FP8-13	251A	257A	263A	269A	
	RED/DON'T WALK	3	FP1-1	FP2-1	FP3-1	FP4-1	FP5-1	FP6-1	FP7-1	FP8-1	253A	259A	265A	271A	
POWER	+24 VDC	9	◁					K13-7						▷60B	
	CHASSIS GROUND	2	◁												▷GB1
	AC NEUTRAL	11	NB1 FR1-2	NB1	NB1	NB1	NB1	NB1	NB1	NB1	NB1	NB1	NB1	NB1	NB1
	115 VAC	1	SB1	SB1	SB2	SB2	SB1	SB1	SB2	SB2	SB1	SB2	SB1	SB2 FP8-8	

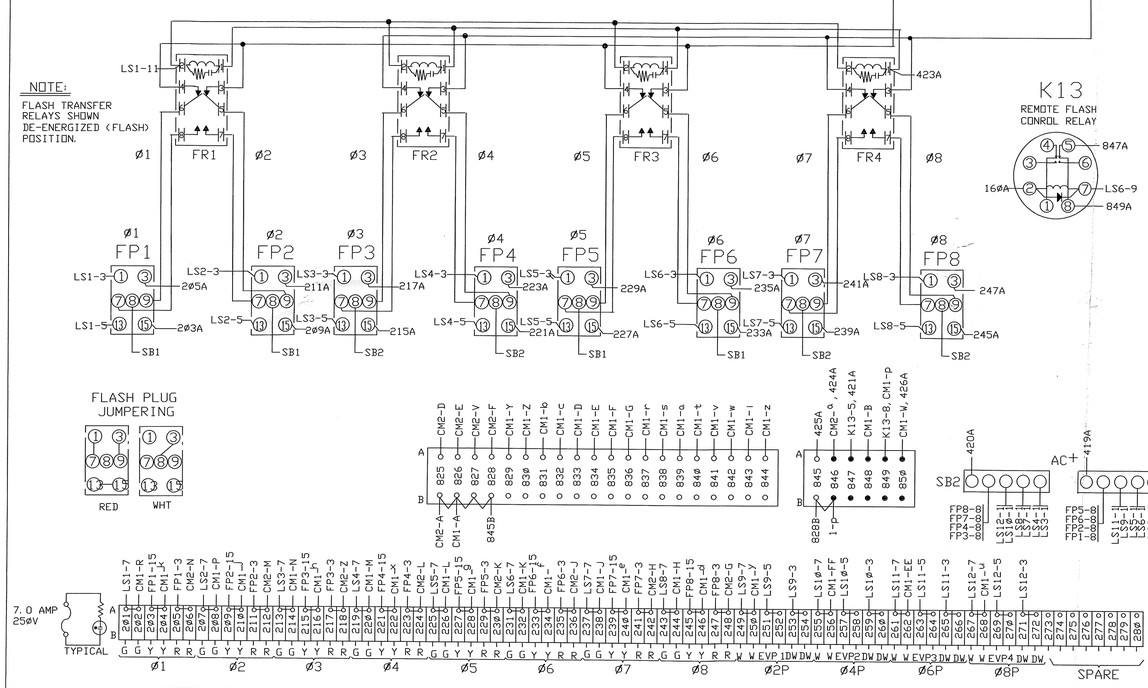

NEMA 12CH CONFLICT MONITOR

CM1

SH	SHELL GROUND	GB1
A	AC+ I	826B
B	RELAY 1 NO	848A
C	RELAY 2 NC	141A
D	CH 12 GRN	833A
E	CH 11 GRN	834A
F	CH 10 GRN	835A
G	CH 9 GRN	836A
H	CH 8 GRN Ø8	244A
J	CH 7 GRN Ø7	238A
K	CH 6 GRN Ø6	232A
L	CH 5 GRN Ø5	226A
M	CH 4 GRN Ø4	220A
N	CH 3 GRN Ø3	214A
P	CH 2 GRN Ø2	208A
R	CH 1 GRN/Ø1	202A
S	+24V MONITOR I	59B
T	LOGIC GROUND	53B
U	CHASSIS GROUND	SHELL
V	AC-(NEUTRAL)	NB1
W	RELAY 1 COMMON(AC+)	850A
X	RELAY 2 COMMON (LG)	54B
Y	CH 12 YEL	829A
Z	CH 11 YEL	830A
a	CH 10 WK	839A
b	CH 10 YEL	831A
c	CH 9 YEL	832A
d	CH 8 YEL Ø8	246A
e	CH 7 YEL Ø7	240A
f	CH 6 YEL Ø6	234A
g	CH 5 YEL Ø5	228A
h	CH 3 YEL Ø3	216A
i	CH 3 WK	843A
j	CH 2 YEL Ø2	210A
k	CH 1 YEL Ø1	204A
m	CONT. VOLT. MON.	52B
n	+24V MONITOR INHIBIT	100B
p	RELAY 1 NC	849A
q	RELAY 2 NO	156A
r	CH 12 WK	837A
s	CH 11 WK	838A
t	CH 9 WK	840A
u	CH 8 WK Ø8	268A
v	CH 7 WK	841A
w	CH 5 WK	842A
x	CH 4 YEL Ø4	222A
y	CH 2 WK Ø2	250A
z	CH 1 WK	844A
AA	SPARE 1	142A
BB	RESET	100B
CC	CAB INTERLOCK A	100B
DD	CAB INTERLOCK B	100B
EE	CH 6 WK Ø6	262A
FF	CH 4 WK Ø4	256A
GG	SPARE 2	143A
HH	SPARE 3	144A

CM2

A	AC+II	825B
B	DELAY RELAY COMM	55B
C	DELAY RELAY NO	6A
D	CH 12 RED	825A
E	CH 11 RED	826A
F	CH 9 RED	828A
G	CH 8 RED Ø8	248A
H	CH 7 RED Ø7	242A
J	CH 6 RED Ø6	236A
K	CH 5 RED Ø5	230A
L	CH 4 RED Ø4	224A
M	CH 2 RED Ø2	212A
N	CH 1 RED Ø1	206A
P	SPARE 1	145A
R	+24V MONITOR II	58B
S	SPARE 2	146A
T	SPARE 3	147A
U	DELAY RELAY NC	100B
V	CH 10 RED	827A
W	SPARE 4	100B
X	SPARE 5	100B
Y	SPARE 6	100B
Z	CH 3 RED Ø3	218A
a	RED ENABLE	846A
b	SPARE 7	100B
c	SPARE 8	101B

CONFLICT MONITOR MATRIX PROGRAMMING INSTRUCTIONS

1-2 2-3 3-4 4-5 5-6 6-7 7-8 8-9 9-10 10-11 11-12
1-3 2-4 3-5 4-6 5-7 6-8 7-9 8-10 9-11 10-12
1-4 2-5 3-6 4-7 5-8 6-9 7-10 8-11 9-12
1-5 2-6 3-7 4-8 5-9 6-10 7-11 8-12
1-6 2-7 3-8 4-9 5-10 6-11 7-12
1-7 2-8 3-9 4-10 5-11 6-12
1-8 2-9 3-10 4-11 5-12
1-9 2-10 3-11 4-12
1-10 2-11 3-12
1-11 2-12
1-12

CH1-Ø_1 CH2-Ø_2 CH3-Ø_3 CH4-Ø_4 CH5-Ø_5 CH6-Ø_6 CH7-Ø_7 CH8-Ø_8 CH9-Ø___ CH10-Ø___ CH11-Ø___ CH12-Ø___

CHANNEL-Ø COMBINATIONS NOT PINNED WITH MATRIX JUMPERS CONSTITUTE CONFLICTING MOVEMENTS. TO PROGRAM, CIRCLE PERMISSIVE COMBINATIONS AND INSTALL JUMPERS ON CORRESPONDING PINS ON THE PROGRAM CARD.

POWER PANEL ASSEMBLY (FRONT VIEW)

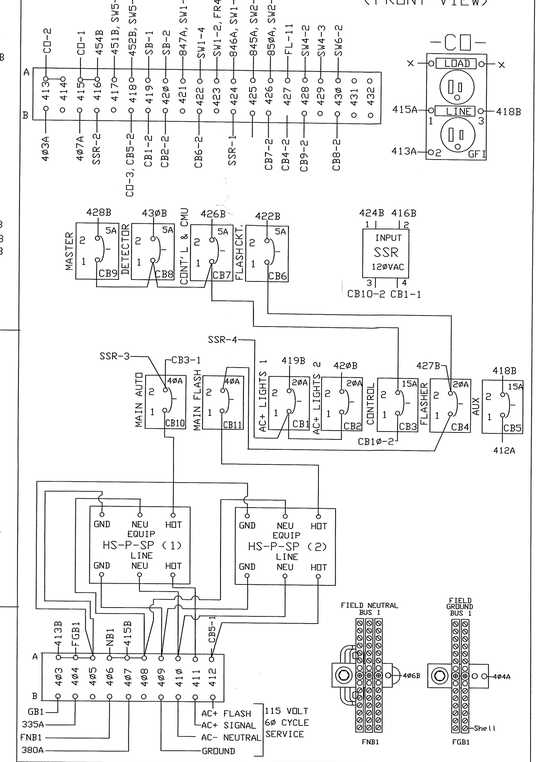

TIGHTENING TORQUE SPECIFICATIONS

SCREW SIZE	6-32	8-32	10-32
POUND INCHES	12	16	25.5
BLOCK TYPE	SAK56	RK6-10	SAK35N
POUND INCHES	10.5	16	35
BLOCK TYPE	ZB35	ZB10	
POUND INCHES	35.5	17.75	

VEHICLE SIGNALS

SIGNAL	TERMINAL G←	Y←	R←	G	Y	R
1-1	201	203	205			
1-2	202	204	206			
2-1				207	209	211
2-2				208	210	212
3-1	213	215	217			
3-2	214	216	218			
4-1				219	221	223
4-2				220	222	224
5-1	225	227	229			
5-2	226	228	230			
6-1				231	233	235
6-2				232	234	236
7-1	237	239	241			
7-2	238	240	242			
8-1				243	245	247
8-2				244	246	248

SIGNAL HEAD NEUTRALS TO BE TERMINATED ON FNB1

VEH DETECTORS

DET	TERMINAL
D1-1	308, 309
D1-2	303, 304
D2-1	345, 346
D3-1	318, 319
D3-2	313, 314
D4-1	355, 356
D4-2	358, 359
D4-3	365, 366
D5-1	311, 312
D5-2	306, 307
D6-1	348, 349
D7-1	321, 322
D7-2	316, 317
D8-1	323, 324
D8-2	326, 327
D8-3	368, 369

LOOP LEAD IN DRAIN WIRES ARE TO BE CONNECTED TO GREEN/YEL WIEDMULLER BLOCKS ONLY

PED SIGNALS

SIGNAL	TERMINAL WK	DW
P2-1	249	253
P2-2	250	254
P4-1	255	259
P4-2	256	260
P6-1	261	265
P6-2	262	266
P8-1	267	271
P8-2	268	272

PED HEAD NEUTRALS TO BE TERMINATED ON FNB1

PED PUSHBUTTONS

PPB	TERMINAL
PB2-1, PB2-2	301
PB4-1, PB4-2	302
PB6-1, PB6-2	303
PB8-1, PB8-2	304

NOTES

1) IF EVP HEADS ARE INSTALLED JUMPER 367B TO 369B AND / OR 335B TO 337B

EVP SENSORS

CONTR. CHAN.	PHASES	POLE #	SIGNAL	DC(+)	GND
1	1-6	2	333	334	337
2	2-5	4	336	334	337
3	3-8	3	338	339	342
4	4-7	1	341	339	342

EVP CONFIRMATORY LIGHTS

CONTR. CHAN.	PHASES	POLE #	TERM
1	1-6	2	251
2	2-5	4	257
3	3-8	3	263
4	4-7	1	269

EVP TYPICAL SENSOR WIRE COLORS

SIGNAL	DC(+)	GND
YEL	ORG	BLU
CLR	RED	BLK
WHT	RED	BLK

REV.	STATUS
SHEET 1	2	3
REV A	A	A

FOR: ANOKA

REV | DATE | REVISION

DATE 8/25/99
DRAWN MPD

ACT Electronics, Inc.

CSAH 18 AT ANDOVER BLVD

TITLE: MNDOT 1999 "R" & "P" CABINET

SIZE D | PART#

PROPRIETARY INFORMATION OF ACT ELECTRONICS CORPORATION IS INCLUDED IN THE INFORMATION DISCLOSED IN THIS DOCUMENT. THIS DOCUMENT OR ANY PART THEREOF, OR INFORMATION CONTAINED HEREIN, SHALL BE REPRODUCED OR TRANSFERRED TO OTHER DOCUMENTS FOR ANY PURPOSE, OR USED FOR ANY PURPOSE NOT SPECIFICALLY AUTHORIZED IN WRITING BY ACT ELECTRONICS CORPORATION.

SCALE | FILE ACT99RP1 | REV A | SHEET 1 OF 3

CONTROLLER INTERFACE PANEL

1

SH	SHELL GROUND	1-V
A	RESV.	6B
B	24VDC+	59A
C	VOLTAGE MONITOR	52A
D	Ø1 RED	64A
E	Ø1 DWK	66A
F	Ø2 RED	71A
G	Ø2 DWK	73A
H	Ø2 PCL	1ØØ2A
J	Ø2 WK	72A
K	Ø2 VEH DET	68A
L	Ø2 PED DET	89A
M	Ø2 HOLD	8B
N	STOP TIMING 1	15A
P	INHIBIT MAX TERM 1	9A
R	EXTERNAL START	6A
S	INTERVAL ADVANCE	19A
T	INDICATOR LAMP CONT	2ØA
U	AC- NEUTRAL	NB1
V	CHASSIS GROUND	GB1
W	LOGIC GROUND	53A
X	FLASH LOGIC OUT	5A
Y	STATUS BIT C1	17B
Z	Ø1 YEL	63A
a	Ø1 PCL	1ØØ1A
b	Ø2 YEL	7ØA
c	Ø2 GRN	69A
d	Ø2 CHECK	22A
e	Ø2 PHASE ON	34A
f	Ø1 VEH DET	61A
g	Ø1 PED DET	88A
h	Ø1 HOLD	7B
i	FORCE OFF 1	7A
j	EXT MIN RECALL ALL/Ø	5ØA
k	MAN. CONTROL ENABLE	4A
m	CALL TO NON-ACT I	17A
n	TEST INPUT A	1B
p	AC+ CONTROL	846B
q	SPARE 1	3B
r	STATUS BIT B1	16B
s	Ø1 GRN	62A
t	Ø1 WK	65A
u	Ø1 CHECK	21A
v	Ø2 PED OMIT	34B
w	OMIT RED CLR	11A
x	RED REST MODE 1	13A
y	SPARE 2	4B
z	CALL TO NON-ACT II	18A
AA	TEST INPUT B	2B
BB	WALK REST MODIFIER	3A
CC	STATUS BIT A1	15B
DD	Ø1 PHASE ON	33A
EE	Ø1 PED OMIT	33B
FF	PED RECYCLE 1	92A
GG	MAX 2 SELECT	1A
HH	SPARE 3	5B

2

A	Ø1 PHASE NEXT	21B
B	SPARE 1	29A
C	Ø2 PHASE NEXT	22B
D	Ø3 GRN	76A
E	Ø3 YEL	77A
F	Ø3 RED	78A
G	Ø4 RED	84A
H	Ø4 PCL	1ØØ4A
J	Ø4 DWK	86A
K	Ø4 CHECK	24A
L	Ø4 VEH DET	81A
M	Ø4 PED DET	91A
N	Ø3 VEH DET	75A
P	Ø3 PED DET	9ØA
R	Ø3 PHASE OMIT	43A
S	Ø2 PHASE OMIT	42A
T	Ø5 PED OMIT	37B
U	Ø1 PHASE OMIT	41A
V	PED RECYCLE 2	132A
W	SPARE 2	29B
X	SPARE 3	3ØA
Y	Ø3 WK	79A
Z	Ø3 PCL	1ØØ3A
a	Ø3 DWK	8ØA
b	Ø4 GRN	82A
c	Ø4 YEL	83A
d	Ø4 WALK	85A
e	Ø4 PHASE ON	36A
f	Ø4 PHASE NEXT	24B
g	Ø4 PHASE OMIT	44A
h	Ø4 HOLD	1ØB
i	Ø3 HOLD	9B
j	Ø3 PED OMIT	35B
k	Ø6 PED OMIT	38B
m	Ø7 PED OMIT	39B
n	Ø8 PED OMIT	4ØB
p	OL A YEL	96A
q	OL A RED	97A
r	Ø3 CHECK	23A
s	Ø3 PHASE ON	35A
t	Ø3 PHASE NEXT	23B
u	OL D RED	14ØA
v	SPARE 4	3ØB
w	OL D GRN	138A
x	Ø4 PED OMIT	36B
y	SPARE 5	31B
z	MAX 2 SELECT 2	2A
AA	OL A GRN	95A
BB	OL B YEL	99A
CC	OL B RED	1ØØA
DD	OL C RED	137A
EE	OL D YEL	139A
FF	OL C GRN	135A
GG	OL B GRN	98A
HH	OL C YEL	136A

3

A	STATUS BIT A2	18B
B	STATUS BIT B2	19B
C	Ø8 DWK	126A
D	Ø8 RED	124A
E	Ø7 YEL	117A
F	Ø7 RED	118A
G	Ø6 RED	111A
H	Ø5 RED	1Ø4A
J	Ø5 YEL	1Ø3A
K	Ø5 PCL	1ØØ5A
L	Ø5 DWK	1Ø6A
M	Ø5 PHASE NEXT	25B
N	Ø5 PHASE ON	37A
P	Ø5 VEH DET	1Ø1A
R	Ø5 PED DET	128A
S	Ø6 VEH DET	1Ø8A
T	Ø6 PED DET	129A
U	Ø7 PED DET	13ØA
V	Ø7 VEH DET	115A
W	Ø8 PED DET	131A
X	Ø8 HOLD	14B
Y	FORCE OFF 2	8A
Z	STOP TIME 2	16A
a	INHIBIT MAX TERM 2	1ØA
b	SPARE 1	31A
c	STATUS BIT C2	2ØB
d	Ø8 WK	125A
e	Ø8 YEL	123A
f	Ø7 GRN	116A
g	Ø6 GRN	1Ø9A
h	Ø6 YEL	11ØA
j	Ø5 GRN	1Ø2A
j	Ø5 WK	1Ø5A
k	Ø5 CHECK	25A
m	Ø5 HOLD	11B
n	Ø5 PHASE OMIT	45A
p	Ø6 HOLD	12B
q	Ø6 PHASE OMIT	46A
r	Ø7 PHASE OMIT	47A
s	Ø8 PHASE OMIT	48A
t	Ø8 VEH DET	121A
u	RED REST MODE 2	14A
v	OMIT RED CLR 2	12A
w	Ø8 PCL	1ØØ8A
x	Ø8 GRN	122A
y	Ø7 DWK	12ØA
z	Ø6 DWK	113A
AA	Ø6 PCL	1ØØ6A
BB	Ø6 CHECK	26A
CC	Ø6 PHASE ON	38A
DD	Ø6 PHASE NEXT	26B
EE	Ø7 HOLD	13B
FF	Ø8 CHECK	28A
GG	Ø8 PHASE ON	4ØA
HH	Ø8 PHASE NEXT	28B
JJ	Ø7 WK	119A
KK	Ø7 PCL	1ØØ7A
LL	Ø6 WK	112A
MM	Ø7 CHECK	27A
NN	Ø7 PHASE ON	39A
PP	Ø7 PHASE NEXT	27B

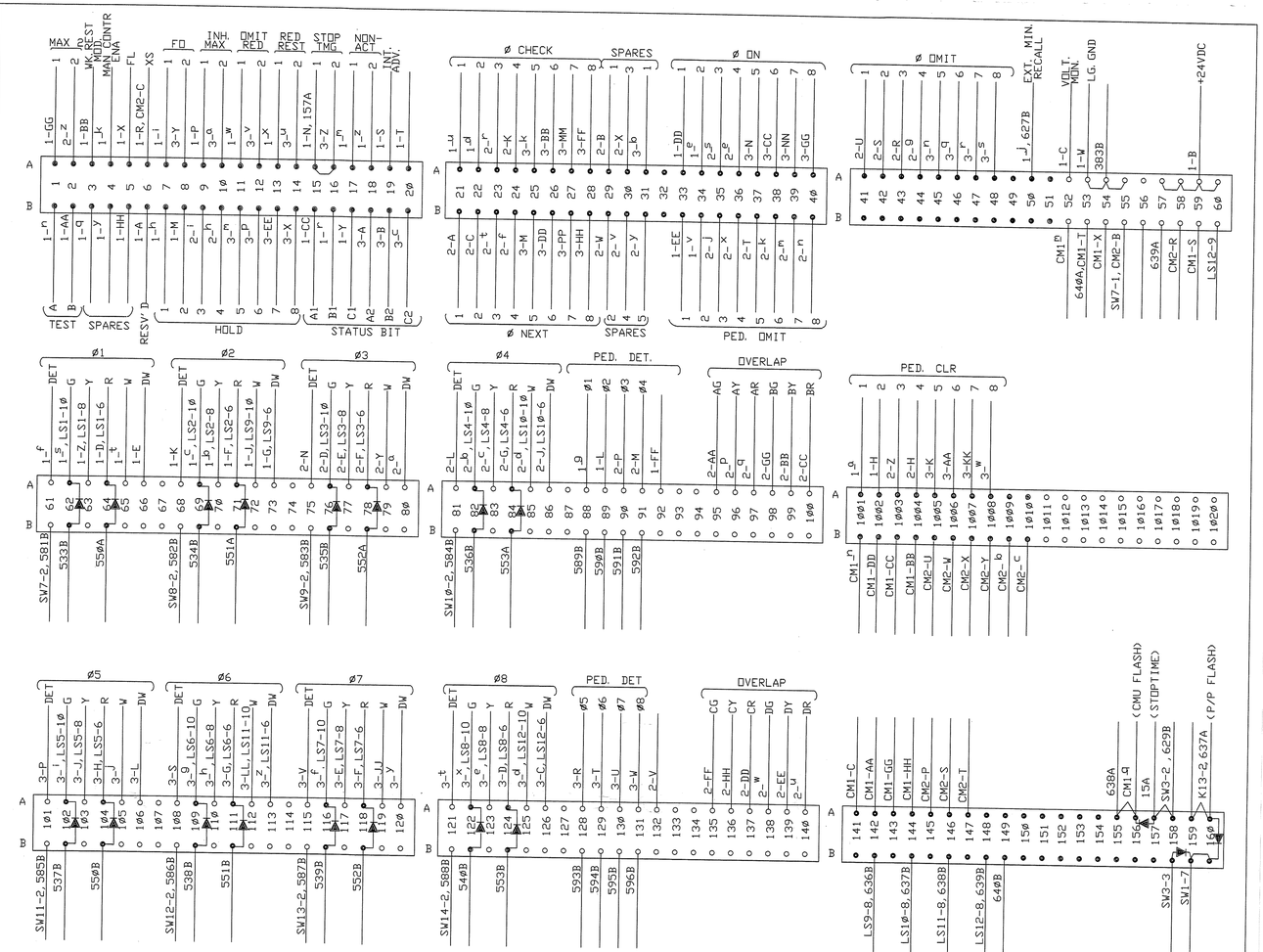

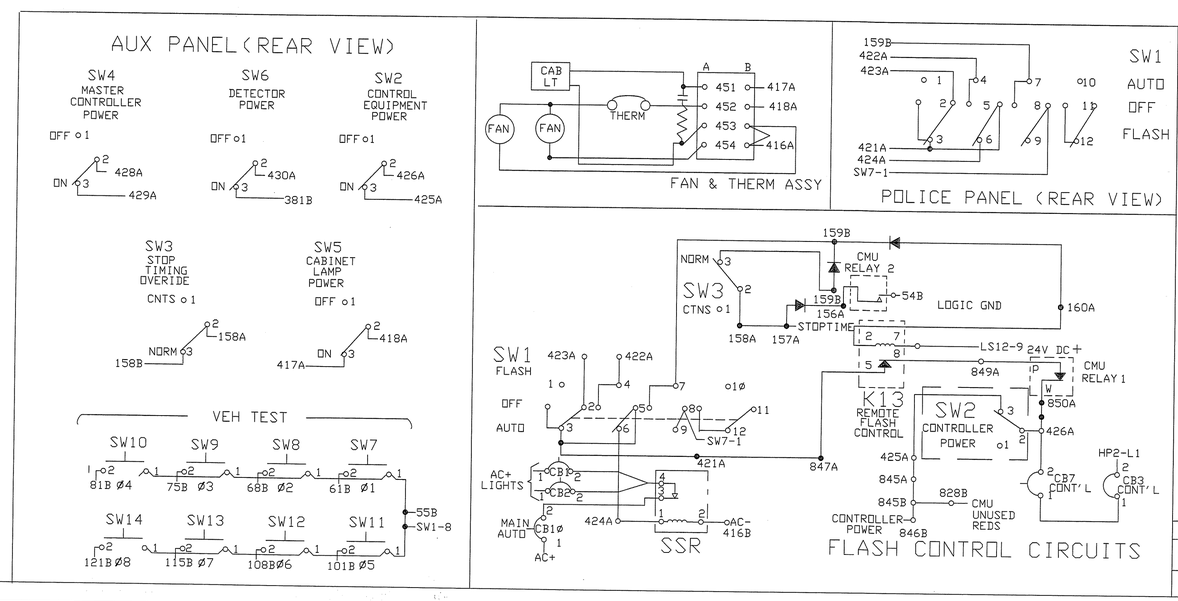

CSAH 18 AT ANDOVER BLVD

REV	DATE	REVISION

DATE 11/24/98
DRAWN MPO

ACT Electronics, Inc.

TITLE MNDOT 1998 "R" & "P" CABINET

REV. STATUS			
SHEET	1	2	3
REV	A	A	A

FOR: MNDOT

SIZE D
PART#
SCALE

PROPRIETARY INFORMATION OF ACT ELECTRONICS CORPORATION IS INCLUDED IN THE INFORMATION DISCLOSED IN THIS DOCUMENT. NEITHER THIS DOCUMENT, NOR THE INFORMATION DISCLOSED HEREIN, MAY BE USED, REPRODUCED OR TRANSMITTED IN ANY FORM OR MEANS FOR ANY PURPOSE OR USED FOR ANY PURPOSE NOT SPECIFICALLY AUTHORIZED IN WRITING BY ACT ELECTRONICS CORPORATION.

FILE ACT98MP2 REV A SHEET 2 OF 3

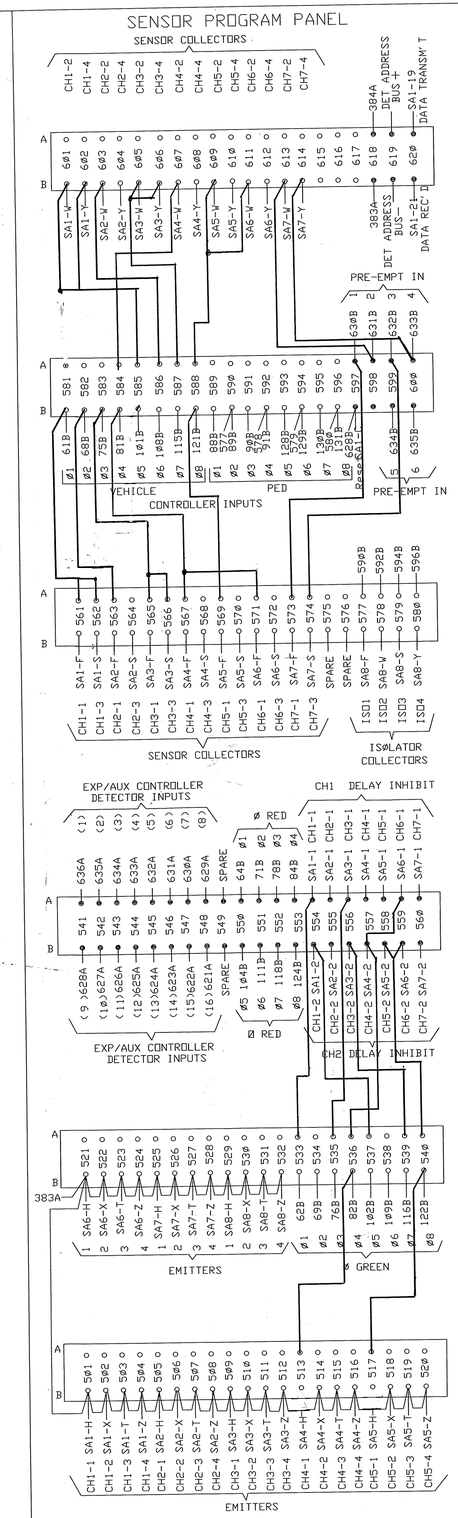

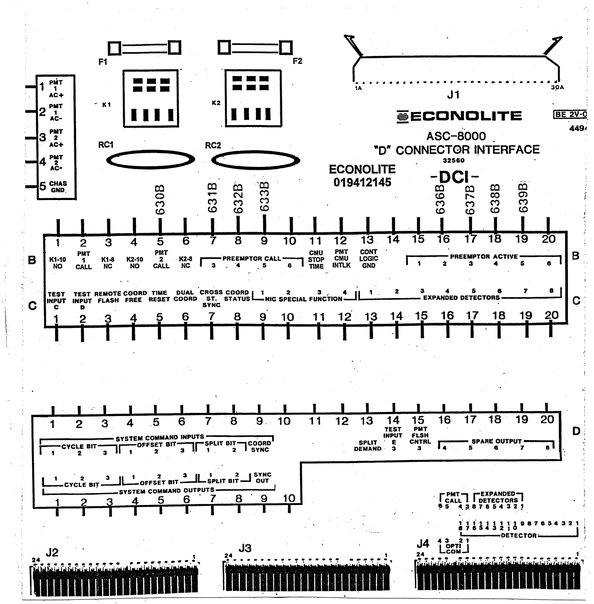

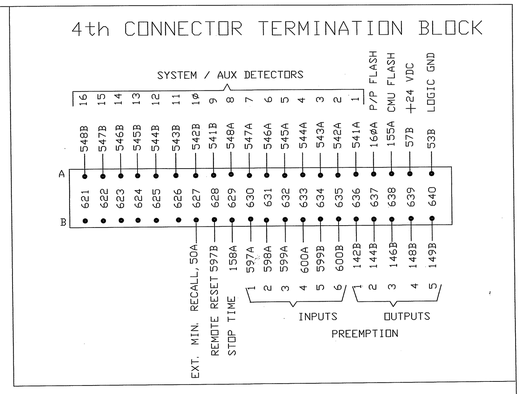

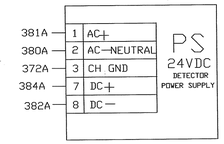

SA

				DETECTORS AND PPB ISOLATION																							
			⊕ SA1 THROUGH SA7 ARE WIRED TO ACCEPT VEH DET. OR EVP DISCRIMINATOR OR PPB ISOLATOR.		SA1			SA2			SA3			SA4			SA5			SA6			SA7			SA8		FUNCTIONS 1-CALL&EXTEND 2-CALL ONLY 3-EXTEND ONLY 4-CALL ONLY DENS 5-DLY CALL ONLY 6-DLY CALL ONLY DENSITY 7-DLY CALL IMMED EXTEND 8-CARRY OVER 9-ADVISORY 1Ø-SAMPLING 11-SPECIAL -SEE NOTE-	
					PHASE	FUNC	DET	PHASE	FUNC	DET	PHASE	FUNC	DET	PHASE	FUNC	DET	PHASE	FUNC	DET	PHASE	FUNC	DET	PHASE	FUNC	DET	PPB ISOLATION PHASE		
			☒ Pin 10 of the edge conn. can be jumpered for use as CH4 delay inhibit. Jumpering will disable addressing.	CH 1	1	1	1-2	2	1	2-1	3	1	3-2	4	3/6	4-1	8	3/6	8-1	4	7	4-3	EVP		1-6	2	CH 1	
				CH 2	5	1	5-2	6	1	6-1	7	1	7-2	4	7	4-2	8	7	8-2	8	7	8-3	EVP		2-5	4	CH 2	
				CH 3	1	1	1-1				3	1	3-1										EVP		3-8	6	CH 3	
				CH 4	5	1	5-1				7	1	7-1										EVP		4-7	8	CH 4	
				MODEL	224			222			224			222T			222T			222T						244	MODEL	
MAIN I/O BLOCK	WIRE COLOR	SA I/O BLOCK	EDGE CONN.																									
1	BLK/YEL	—	A	DC GROUND	382B																					NC	SPARE	A
2	RED	—	B	24V DC+	384B																					NC	SPARE	B
3	BLK/BLU	—	C	REMOTE RESET	597B																					NC	SPARE	C
	BRN	3	D-4	CH 1 LOOP	3Ø3A			345A			313A			355A			323A			365A			333A			3Ø1A	INPUT CH 1	D
	WHT/BRN	4	E-5	CH 1 LOOP	3Ø4A			346A			314A			356A			324A			366A			334A			379A	INPUT COMMON	E
5	ORANGE		6	ADDRESS BIT # Ø	619B			SA1-15			SA2-1Ø			SA3-15			SA4-15			SA5-1Ø			SA6-15			NC		
	WHT/BLU	5	F	CH 1 OUTPUT (+)	561B			563B			565B			567B			569B			571B			573B			577B	OUTPUT CH 1 (+)	F
	BLUE	6	H	CH 1 OUTPUT (-)	5Ø1B			5Ø5B			5Ø9B			513B			517B			521B			525B			529B	OUTPUT CH 1 (-)	H
	BLK/RED	7	J-8	CH 2 LOOP	3Ø6A			348A			316A			358A			326A			368A			336A			3Ø2A	INPUT CH 2	J
	BLK/WHT	8	K-9	CH 2 LOOP	3Ø7A			349A			317A			359A			327A			369A			337A			379B	INPUT COMMON	K
6	YELLOW		1Ø	ADDRESS BIT # 1	619A			SA1-6			SA3-6			SA4-6			SA4-1Ø			SA5-15			SA7-6			NC		
12	GREEN	—	L	CHASSIS GROUND	34ØA																						CHASSIS GROUND	L
15	WHITE	—	M	AC-	SA2-M																					380B	AC-(NEUTRAL)	M
13	BLACK	—	N	115V AC+	SA2-N																					381A	115V AC+	N
	ORANGE	9	P-13	LOOP CH 3	3Ø8A			35ØA			318A			36ØA			328A			37ØA			338A			343A	INPUT CH 3	P
	WHT/OR	1Ø	R-14	LOOP CH 3	3Ø9A			351A			319A			361A			329A			371A			339A			379B	INPUT COMMON	R
			15	ADDRESS BIT # 2	SA1-1Ø			SA2-6			SA2-15			SA3-1Ø			SA5-6			SA6-1Ø			SA7-1Ø			NC		
	WHT/GRY	11	S	CH 3 OUTPUT (+)	562B			564B			566B			568B			57ØB			572B			574B			579B	OUTPUT CH 3 (+)	S
	GREY	12	T	CH 3 OUTPUT (-)	5Ø3B			5Ø7B			511B			515B			519B			523B			527B			531B	OUTPUT CH 3 (-)	T
	YELLOW	13	U-17	CH 4 LOOP	311A			353A			321A			363A			331A			373A			341A			344A	INPUT CH 4	U
	WHT/YEL	14	V-18	CH 4 LOOP	312A			354A			322A			364A			332A			374A			342A			379A	INPUT COMMON	V
8	GREY		19	DATA TRANSMIT	62ØA																					NC		
10	VIOLET		21	DATA RECEIVE	62ØB																					NC		
	WHT/VIO	15	W	CH 2 OUTPUT (+)	6Ø1B			6Ø3B			6Ø5B			6Ø7B			6Ø9B			611B			613B			578B	OUTPUT CH 2 (+)	W
	VIOLET	16	X	CH 2 OUTPUT (-)	5Ø2B			5Ø6B			51ØB			514B			518B			522B			526B			53ØB	OUTPUT CH 2 (-)	X
	WHT/GRN	17	Y	CH 4 OUTPUT (+)	6Ø2B			6Ø4B			6Ø6B			6Ø8B			61ØB			612B			614B			58ØB	OUTPUT CH 4 (+)	Y
	WHT/BLK	18	Z	CH 4 OUTPUT (-)	5Ø4B			5Ø8B			512B			516B			52ØB			524B			528B			532B	OUTPUT CH 4 (-)	Z
	WHT/RED	1	1	CH 1 GREEN	554A			555A			556A			557A			558A			559A			56ØA			——	SPARE	
	RED	2	2	CH 2 GREEN	554B			555B			556B			557B			558B			559B			56ØB			——	SPARE	

REV.	STATUS
SHEET	1 2 3
REV	A A A

REV	DATE	REVISION

DATE 8/25/99
DRAWN MPO

ACT Electronics, Inc.

CSAH 18 AT ANDOVER BLVD

TITLE: MNDOT 1999 "R" & "P" CABINET

SIZE: D | PART#

PROPRIETARY INFORMATION OF ACT ELECTRONICS CORPORATION IS INCLUDED IN THE INFORMATION DISCLOSED IN THIS DOCUMENT. THIS DOCUMENT AND ALL OTHER INFORMATION DISCLOSED HEREIN, SHALL BE REPRODUCED OR TRANSFERRED TO OTHER DOCUMENTS FOR ANY PURPOSE OR USED FOR ANY PURPOSE NOT SPECIFICALLY AUTHORIZED IN WRITING BY ACT ELECTRONICS CORPORATION.

FDR: MNDOT

SCALE | FILE ACT99RP3 | REV A | SHEET 3 OF 3