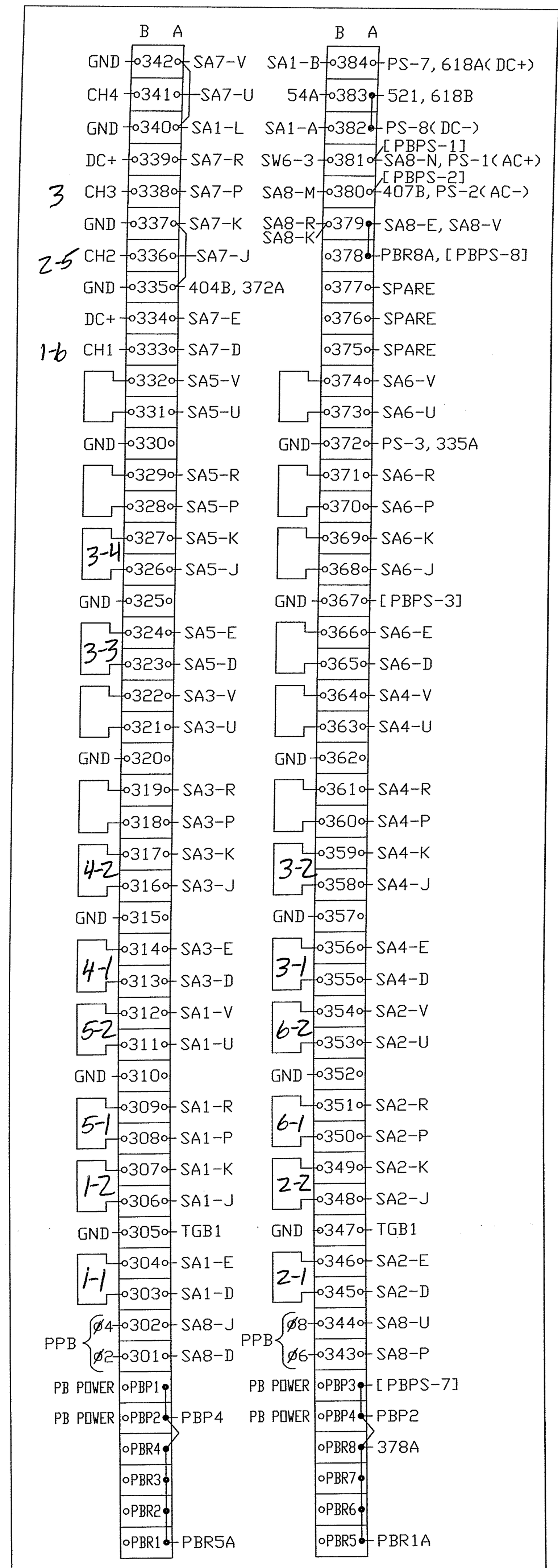

NOTES: 1. PED BUTTON RETURNS MUST BE TERMINATED AT PBR1-PBR8.
2. JUMPERS 335A-337A AND 340A-342A, ARE TO BE ADDED AS NEEDED FOR EVP.
3. 305, 310, 315, 320, 325, 330, 335, 340, 347, 352, 357, 362, 367 AND 372 ARE INTERCONNECTED BY THE MOUNTING RAIL.
4. [ ]=FUTURE CONNECTIONS FOR POWER SUPPLY TO SENSITOUCH PPB'S.

LOAD SWITCH PANEL ASSEMBLY

			1	2	3	4	5	6	7	8	9	10	11	12	13	14
	LS		1	2	3	4	5	6	7	8	9	10	11	12	13	14
	CONT Ø		1	2	3	4	5	6	7	8	2P	4P	6P	8P		
	PLAN Ø															
IN	GREEN / WALK	10	62A	69A	76A	82A	102A	109A	116A	122A	72A	85A	112A	125A		
IN	YELLOW/PED CLR	8	63A	70A	77A	83A	103A	110A	117A	123A	142B	144B	146B	148B		
IN	RED/DON'T WALK	6	64A	71A	78A	84A	104A	111A	118A	124A	73A	86A	113A	126A		
OUT	GREEN / WALK	7	201A	207A	213A	219A	225A	231A	237A	243A	249A	255A	261A	267A		
OUT	YELLOW	5	FP1-13	FP2-13	FP3-13	FP4-13	FP5-13	FP6-13	FP7-13	FP8-13	251A	257A	263A	269A		
OUT	RED/DON'T WALK	3	FP1-1	FP2-1	FP3-1	FP4-1	FP5-1	FP6-1 K13-7	FP7-1	FP8-1	253A	259A	265A	271A		
POWER	+24 VDC	9	◁													▷60B
POWER	CHASSIS GROUND	2	◁													▷GB1
POWER	AC NEUTRAL	11	NB1 FR1-2	NB1	NB1	NB1	NB1	NB1	NB1	NB1	NB1	NB1	NB1	NB1	NB1	NB1
POWER	115 VAC	1	SB1	SB1	SB2	SB2	SB1	SB1	SB2	SB2	SB1	SB2	SB1	SB2 FP8-8		

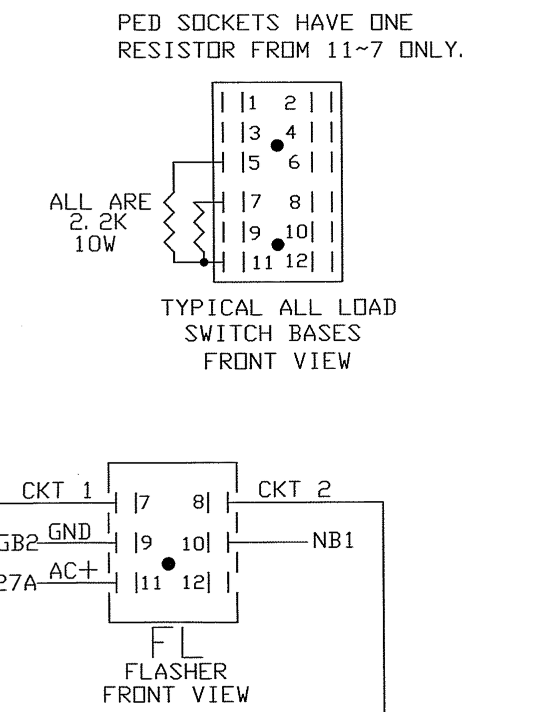

NEMA 12CH CONFLICT MONITOR

CM1

Pin	Function	Wire
SH	SHELL GROUND	GB1
A	AC+ I	826B
B	RELAY 1 NO	848A
C	RELAY 2 NC	141A
D	CH 12 GRN	833A
E	CH 11 GRN	834A
F	CH 10 GRN	835A
G	CH 9 GRN	836A
H	CH 8 GRN Ø8	244A
J	CH 7 GRN Ø7	238A
K	CH 6 GRN Ø6	232A
L	CH 5 GRN Ø5	226A
M	CH 4 GRN Ø4	220A
N	CH 3 GRN Ø3	214A
P	CH 2 GRN Ø2	208A
R	CH 1 GRN Ø1	202A
S	+24V MONITOR I	59B
T	LOGIC GROUND	53B
U	CHASSIS GROUND	SHELL
V	AC-(NEUTRAL)	NB1
W	RELAY 1 COMMON(AC+)	850A
X	RELAY 2 COMMON (LG)	54B
Y	CH 12 YEL	829A
Z	CH 11 YEL	830A
a	CH 10 WK	839A
b	CH 10 YEL	831A
c	CH 9 YEL	832A
d	CH 8 YEL Ø8	246A
e	CH 7 YEL Ø7	240A
f	CH 6 YEL Ø6	234A
g	CH 5 YEL Ø5	228A
h	CH 3 YEL Ø3	216A
i	CH 3 WK	843A
j	CH 2 YEL Ø2	210A
k	CH 1 YEL Ø1	204A
m	CONT. VOLT. MON.	52B
n	+24V MONITOR INHIBIT	1001B
p	RELAY 1 NC	849A
q	RELAY 2 NO	156A
r	CH 12 WK	837A
s	CH 11 WK	838A
t	CH 9 WK	840A
u	CH 8 WK Ø8	268A
v	CH 7 WK	841A
w	CH 5 WK	842A
x	CH 4 YEL Ø4	222A
y	CH 2 WK Ø2	250A
z	CH 1 WK	844A
AA	SPARE 1	142A
BB	RESET	1004B
CC	CAB INTERLOCK A	1003B
DD	CAB INTERLOCK B	1002B
EE	CH 6 WK Ø6	262A
FF	CH 4 WK Ø4	256A
GG	SPARE 2	143A
HH	SPARE 3	144A

CM2

Pin	Function	Wire
A	AC+ II	825B
B	DELAY RELAY COMM	55B
C	DELAY RELAY NO	6A
D	CH 12 RED	825A
E	CH 11 RED	826A
F	CH 9 RED	828A
G	CH 8 RED Ø8	248A
H	CH 7 RED Ø7	242A
J	CH 6 RED Ø6	236A
K	CH 5 RED Ø5	230A
L	CH 4 RED Ø4	224A
M	CH 2 RED Ø2	212A
N	CH 1 RED Ø1	206A
P	SPARE 1	145A
R	+24V MONITOR II	58B
S	SPARE 2	146A
T	SPARE 3	147A
U	DELAY RELAY NC	1005B
V	CH 10 RED	827A
W	SPARE 4	1006B
X	SPARE 5	1007B
Y	SPARE 6	1008B
Z	CH 3 RED Ø3	218A
a	RED ENABLE	846A
b	SPARE 7	1009B
c	SPARE 8	1010B

CONFLICT MONITOR MATRIX PROGRAMMING INSTRUCTIONS

1-2 2-3 3-4 4-5 5-6 6-7 7-8 8-9 9-10 10-11 11-12
1-3 2-4 3-5 4-6 5-7 6-8 7-9 8-10 9-11 10-12
1-4 2-5 3-6 4-7 5-8 6-9 7-10 8-11 9-12
1-5 2-6 3-7 4-8 5-9 6-10 7-11 8-12
1-6 2-7 3-8 4-9 5-10 6-11 7-12
1-7 2-8 3-9 4-10 5-11 6-12
1-8 2-9 3-10 4-11 5-12
1-9 2-10 3-11 4-12
1-10 2-11 3-12
1-11 2-12
1-12

CH1-Ø 1
CH2-Ø 2
CH3-Ø 3
CH4-Ø 4
CH5-Ø 5
CH6-Ø 6
CH7-Ø 7
CH8-Ø 8
CH9-Ø ___
CH10-Ø ___
CH11-Ø ___
CH12-Ø ___

CHANNEL-Ø COMBINATIONS NOT PINNED WITH MATRIX JUMPERS CONSTITUTE CONFLICTING MOVEMENTS. TO PROGRAM, CIRCLE PERMISSIVE COMBINATIONS AND INSTALL JUMPERS ON CORRESPONDING PINS ON THE PROGRAM CARD.

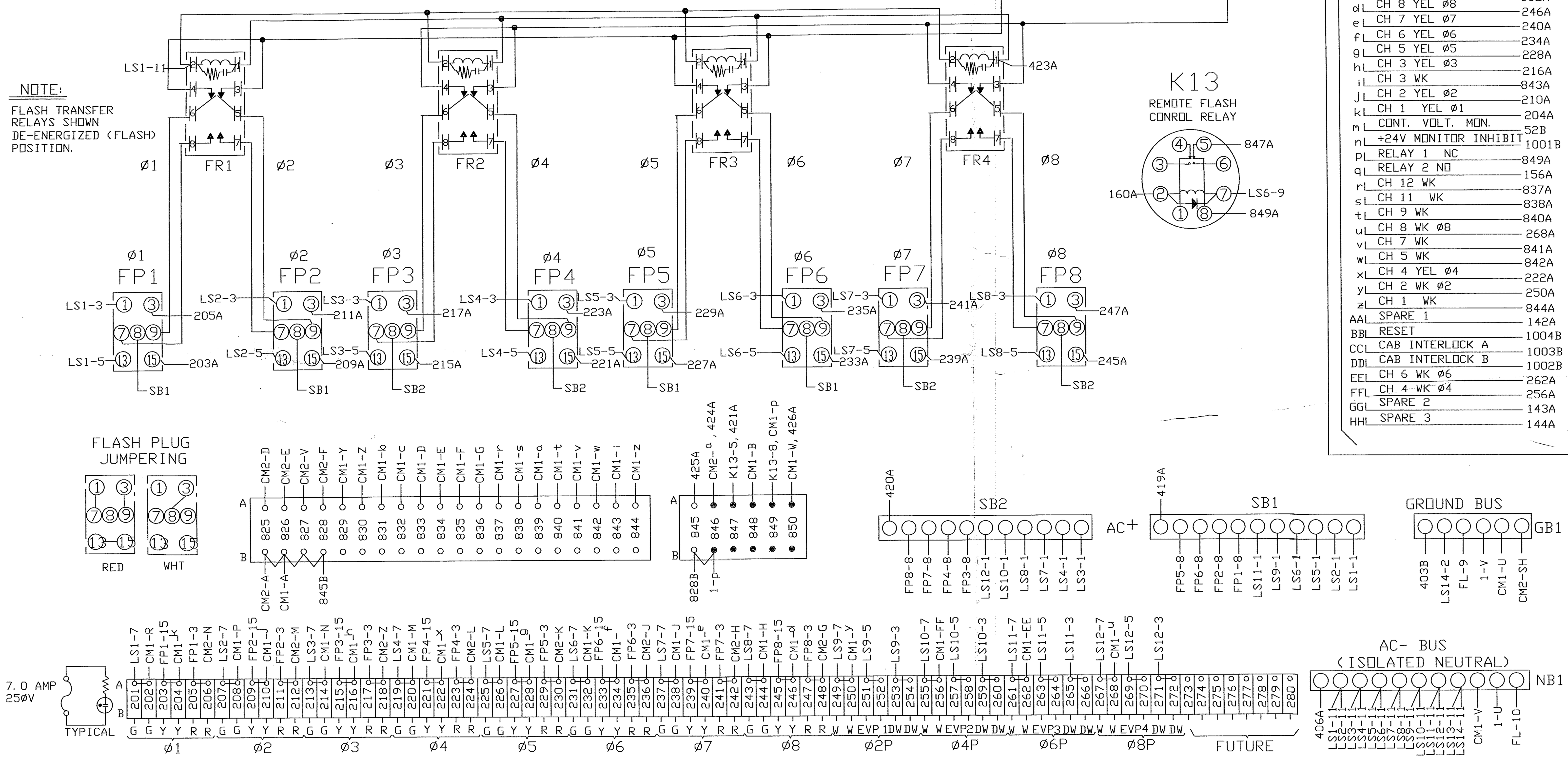

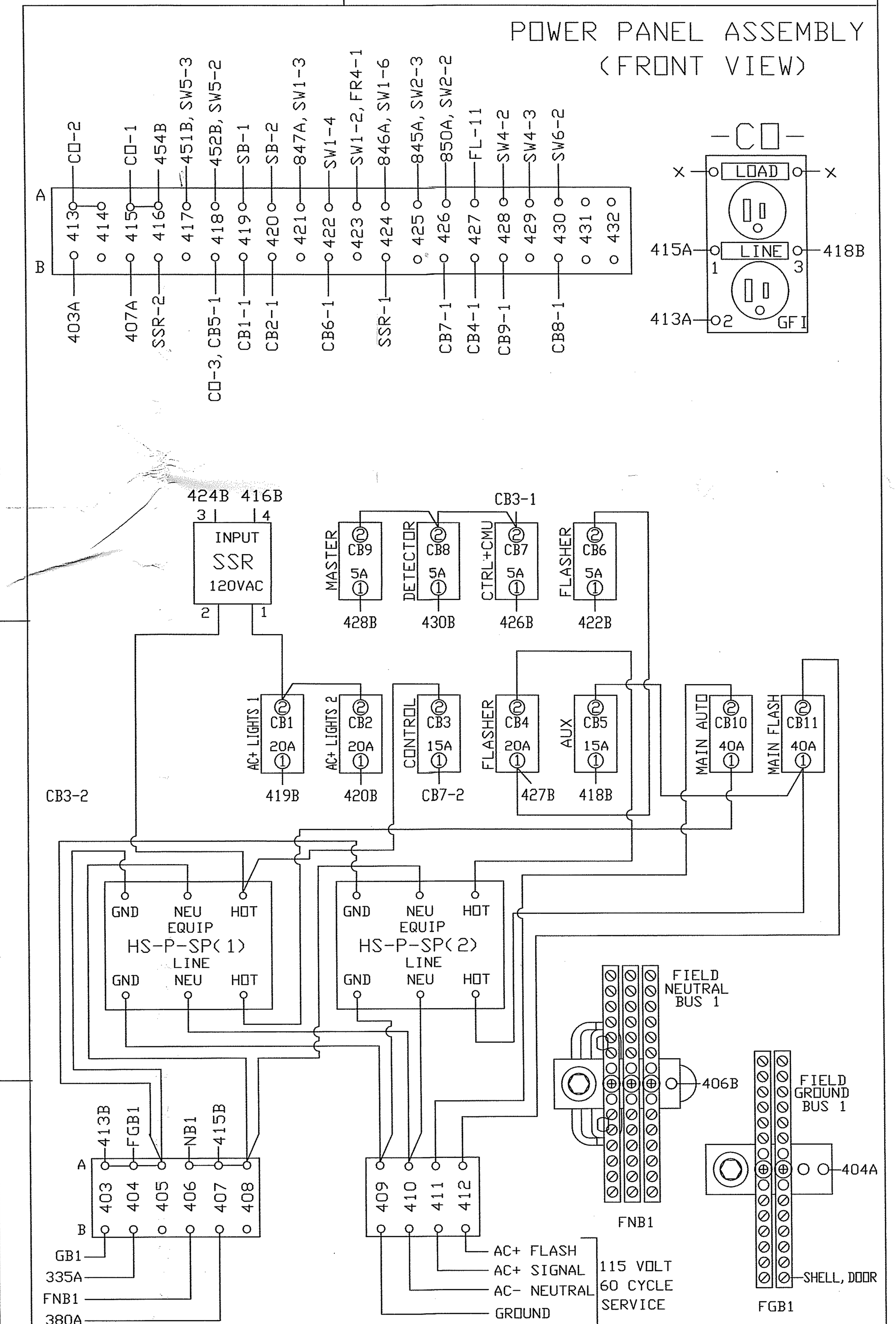

TIGHTENING TORQUE SPECIFICATIONS

SCREW SIZE	6-32	8-32	1Ø-32
POUND INCHES	12	16	25.9
BLOCK TYPE	SAKS6	RK6-10	SAK35N
POUND INCHES	10.5	16	35
BLOCK TYPE	NO-36		
POUND INCHES	35		

EVP SENSORS

CABLE	DISCR. CHAN.	PHASES	POLE#	TERMINAL		
				SIGNAL	DC(+)	GND
	1	1-6	2	333	334	337
	2	2-5	4	336	334	337
	3	3	3	338	339	342
	4					

EVP VERIFY LIGHTS

CABLE	CONTR. CHAN.	PHASES	POLE#	TERM
	1	1-6	2	251
	2	2-5	4	257
	3	3	3	263
	4			

EVP TYPICAL SENSOR WIRE COLORS

SIGNAL	DC(+)	GND
YEL	ORG	BLU
CLR	RED	BLK
WHT	RED	BLK

VEHICLE SIGNALS

CABLE	SIGNAL	TERMINAL					
		G←	Y←	R←	G	Y	R
	1-1	201	203	205			
	1-2	202	204	206			
	2-1, 2-3				207	209	211
	2-2				208	210	212
	4-1				219	221	223
	4-2	220			220	222	224
	5-1	225	227	229			
	5-2	226	228	230			
	6-1, 6-3				231	233	235
	6-2				232	234	236
	3-1				213	215	217
	3-2	214			214	216	218
	3-3	213			213	215	217

SIGNAL HEAD NEUTRALS TO BE TERMINATED ON FNB1

VEH DETECTORS

CABLE	DET	TERMINAL
	1-1	303-304
	1-2	306-307
	2-1	345-346
	2-2	348-349
	4-1	313-314
	4-2	316-317
	5-1	308-309
	5-2	311-312
	6-1	350-351
	6-2	353-354
	3-1	355-356
	3-2	358-359
	3-3	323-324
	3-4	326-327

LOOP LEAD IN DRAIN WIRES ARE TO BE CONNECTED TO GREEN/YEL TERMINAL BLOCKS ONLY

PED PUSHBUTTONS

CABLE	PPB	TERMINAL	RETURN
	2-1	301	PBP1
	2-2	301	PBP1

VEH DETECTORS

CABLE	DET	TERMINAL

PED SIGNALS

CABLE	SIGNAL	TERMINAL	
		WK	DW
	2-1	249	253
	2-2	250	254

PED HEAD NEUTRALS TO BE TERMINATED ON FNB1

REV. STATUS					
SHEET	1	2	3		
REV					

REV	DATE	REVISION

DATE 10/30/01
DRAWN MPO
FOR:

ACT Electronics, Inc.

#23 AT MARKETPLACE DR

TITLE MNDOT 2002 "R" & "P" CABINET

SIZE D
PART#

PROPRIETARY INFORMATION OF ACT ELECTRONICS CORPORATION IS INCLUDED IN THE INFORMATION DISCLOSED IN THIS DOCUMENT. NEITHER THIS DOCUMENT, NOR THE INFORMATION DISCLOSED HEREIN, SHALL BE REPRODUCED OR TRANSFERRED TO OTHER DOCUMENTS FOR ANY PURPOSE OR USED FOR ANY PURPOSE NOT SPECIFICALLY AUTHORIZED IN WRITING BY ACT ELECTRONICS CORPORATION.

SCALE
FILE ACT02RP1
REV

02002

CONTROLLER INTERFACE PANEL

1

SH	SHELL GROUND	1-V
A	RESV.	6B
B	24VDC+	59A
C	VOLTAGE MONITOR	52A
D	ø1 RED	64A
E	ø1 DWK	66A
F	ø2 RED	71A
G	ø2 DWK	73A
H	ø2 PCL	1002A
J	ø2 WK	72A
K	ø2 VEH DET	68A
L	ø2 PED DET	89A
M	ø2 HOLD	8B
N	STOP TIMING 1	15A
P	INHIBIT MAX TERM 1	9A
R	EXTERNAL START	6A
S	INTERVAL ADVANCE	19A
T	INDICATOR LAMP CONT	20A
U	AC- NEUTRAL	NB1
V	CHASSIS GROUND	GB1
W	LOGIC GROUND	53A
X	FLASH LOGIC OUT	5A
Y	STATUS BIT C1	17B
Z	ø1 YEL	63A
a	ø1 PCL	1001A
b	ø2 YEL	70A
c	ø2 GRN	69A
d	ø2 CHECK	22A
e	ø2 PHASE ON	34A
f	ø1 VEH DET	61A
g	ø1 PED DET	88A
h	ø1 HOLD	7B
i	FORCE OFF 1	7A
j	EXT MIN RECALL ALL ø	50A
k	MAN. CONTROL ENABLE	4A
m	CALL TO NON-ACT I	17A
n	TEST INPUT A	1B
p	AC+ CONTROL	846B
q	SPARE 1	3B
r	STATUS BIT B1	16B
s	ø1 GRN	62A
t	ø1 WK	65A
u	ø1 CHECK	21A
v	ø2 PED OMIT	34B
w	OMIT RED CLR	11A
x	RED REST MODE 1	13A
y	SPARE 2	4B
z	CALL TO NON-ACT II	18A
AA	TEST INPUT B	2B
BB	WALK REST MODIFIER	3A
CC	STATUS BIT A1	15B
DD	ø1 PHASE ON	33A
EE	ø1 PED OMIT	33B
FF	PED RECYCLE 1	92A
GG	MAX 2 SELECT	1A
HH	SPARE 3	5B

2

A	ø1 PHASE NEXT	21B
B	SPARE 1	29A
C	ø2 PHASE NEXT	22B
D	ø3 GRN	76A
E	ø3 YEL	77A
F	ø3 RED	78A
G	ø4 RED	84A
H	ø4 PCL	1004A
J	ø4 DWK	86A
K	ø4 CHECK	24A
L	ø4 VEH DET	81A
M	ø4 PED DET	91A
N	ø3 VEH DET	75A
P	ø3 PED DET	90A
R	ø3 PHASE OMIT	43A
S	ø2 PHASE OMIT	42A
T	ø5 PED OMIT	37B
U	ø1 PHASE OMIT	41A
V	PED RECYCLE 2	132A
W	SPARE 2	29B
X	SPARE 3	30A
Y	ø3 WK	79A
Z	ø3 PCL	1003A
a	ø3 DWK	80A
b	ø4 GRN	82A
c	ø4 YEL	83A
d	ø4 WALK	85A
e	ø4 PHASE ON	36A
f	ø4 PHASE NEXT	24B
g	ø4 PHASE OMIT	44A
h	ø4 HOLD	10B
i	ø3 HOLD	9B
j	ø3 PED OMIT	35B
k	ø6 PED OMIT	38B
m	ø7 PED OMIT	39B
n	ø8 PED OMIT	40B
p	DL A YEL	96A
q	DL A RED	97A
r	ø3 CHECK	23A
s	ø3 PHASE ON	35A
t	ø3 PHASE NEXT	23B
u	DL D RED	140A
v	SPARE 4	30B
w	DL D GRN	138A
x	ø4 PED OMIT	36B
y	SPARE 5	31B
z	MAX 2 SELECT 2	2A
AA	DL A GRN	95A
BB	DL B YEL	99A
CC	DL B RED	100A
DD	DL C RED	137A
EE	DL D YEL	139A
FF	DL C GRN	135A
GG	DL B GRN	98A
HH	DL C YEL	136A

3

A	STATUS BIT A2	18B
B	STATUS BIT B2	19B
C	ø8 DWK	126A
D	ø8 RED	124A
E	ø7 YEL	117A
F	ø7 RED	118A
G	ø6 RED	111A
H	ø5 RED	104A
J	ø5 YEL	103A
K	ø5 PCL	1005A
L	ø5 DWK	106A
M	ø5 PHASE NEXT	25B
N	ø5 PHASE ON	37A
P	ø5 VEH DET	101A
R	ø5 PED DET	128A
S	ø6 VEH DET	108A
T	ø6 PED DET	129A
U	ø7 PED DET	130A
V	ø7 VEH DET	115A
W	ø8 PED DET	131A
X	ø8 HOLD	14B
Y	FORCE OFF 2	8A
Z	STOP TIME 2	16A
a	INHIBIT MAX TERM 2	10A
b	SPARE 1	31A
c	STATUS BIT C2	20B
d	ø8 WK	125A
e	ø8 YEL	123A
f	ø7 GRN	116A
g	ø6 GRN	109A
h	ø6 YEL	110A
i	ø5 GRN	102A
J	ø5 WK	105A
k	ø5 CHECK	25A
m	ø5 HOLD	11B
n	ø5 PHASE OMIT	45A
p	ø6 HOLD	12B
q	ø6 PHASE OMIT	46A
r	ø7 PHASE OMIT	47A
s	ø8 PHASE OMIT	48A
t	ø8 VEH DET	121A
u	RED REST MODE 2	14A
v	OMIT RED CLR 2	12A
w	ø8 PCL	1008A
x	ø8 GRN	122A
y	ø7 DWK	120A
z	ø6 DWK	113A
AA	ø6 PCL	1006A
BB	ø6 CHECK	26A
CC	ø6 PHASE ON	38A
DD	ø6 PHASE NEXT	26B
EE	ø7 HOLD	13B
FF	ø8 CHECK	28A
GG	ø8 PHASE ON	40A
HH	ø8 PHASE NEXT	28B
JJ	ø7 WK	119A
KK	ø7 PCL	1007A
LL	ø6 WK	112A
MM	ø7 CHECK	27A
NN	ø7 PHASE ON	39A
PP	ø7 PHASE NEXT	27B

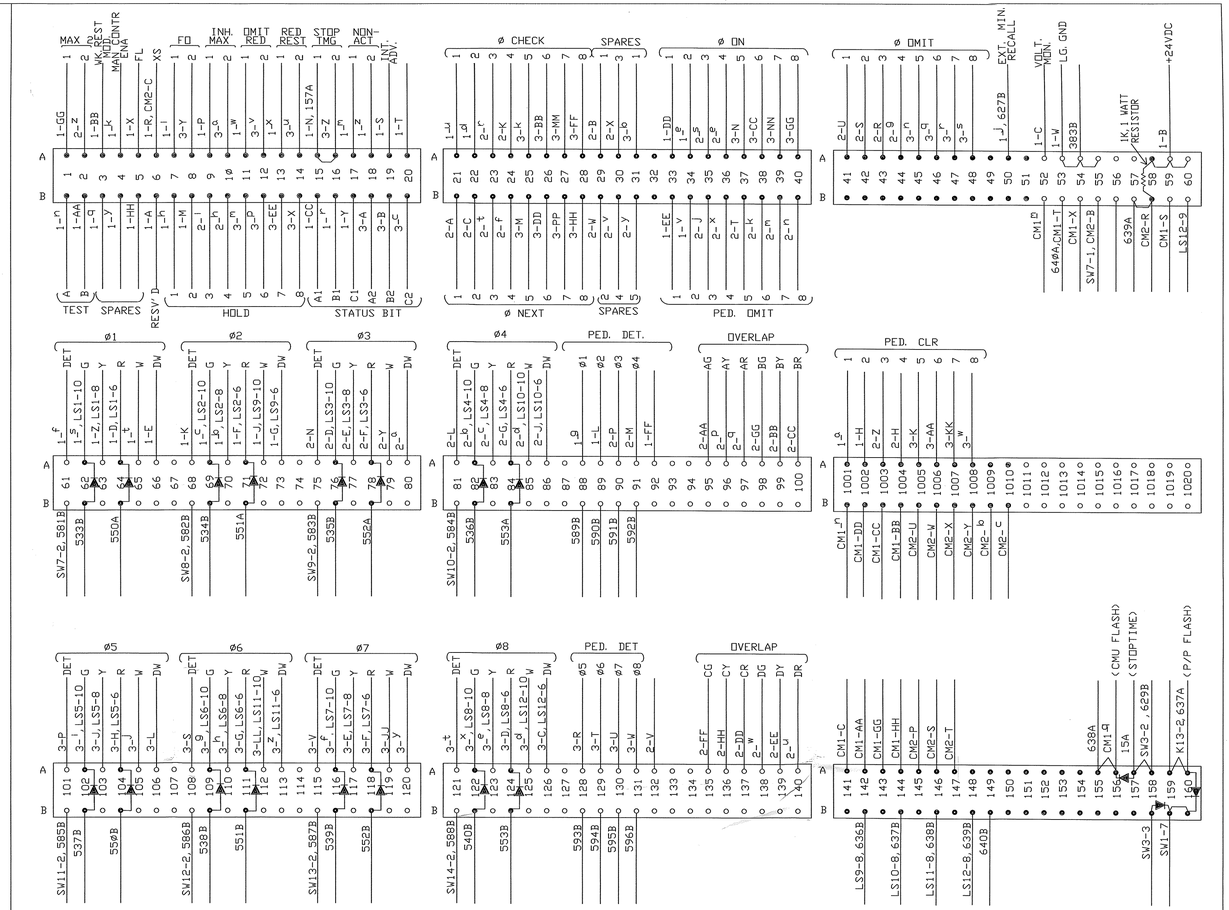

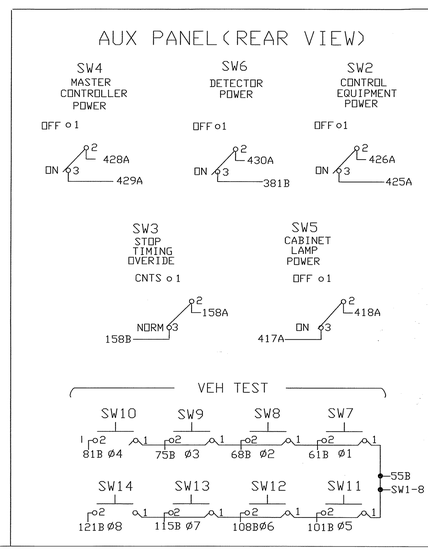

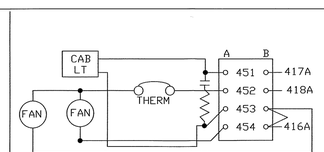

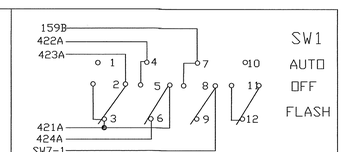

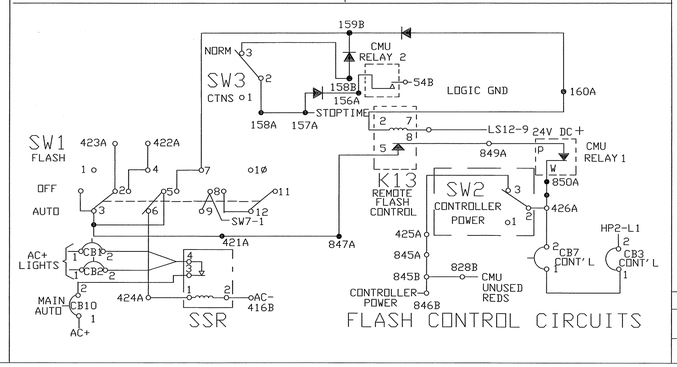

#23 AT MARKETPLACE DR

REV. STATUS						
SHEET	1	2	3			
REV						

REV	DATE	REVISION

DATE 10/31/01
DRAWN MPD
FDN

ACT Electronics, Inc.

TITLE: MNDOT 2002 "R" & "P" CABINET

SIZE D | PART#

SCALE | FILE ACT02RP2 | REV | SHEET 2 OF 3

PROPRIETARY INFORMATION OF ACT ELECTRONICS CORPORATION IS INCLUDED IN THE INFORMATION DISCLOSED IN THIS DOCUMENT. NEITHER THIS DOCUMENT NOR THE INFORMATION DISCLOSED HEREIN, IN WHOLE OR IN PART, SHALL BE REPRODUCED OR USED FOR ANY PURPOSE OR USED FOR ANY PURPOSE NOT SPECIFICALLY AUTHORIZED IN WRITING BY ACT ELECTRONICS CORPORATION

SENSOR PROGRAM PANEL

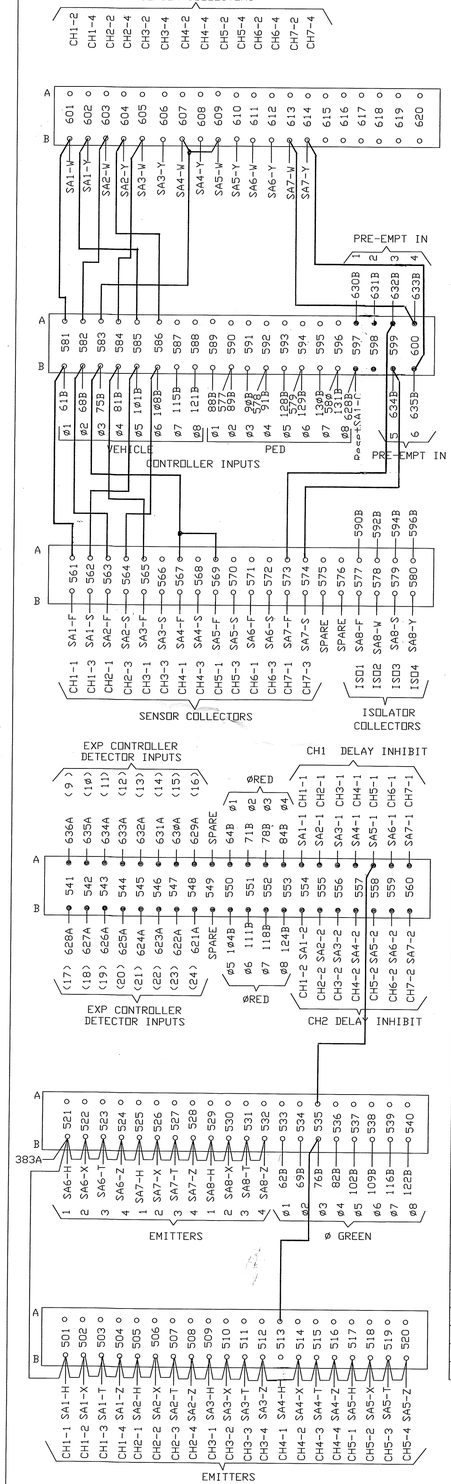

SPECIAL FUNCTION MODULE PIN ASSIGNMENT "D" CABLE 28022900-004			
CONN. PIN	I/O	FUNCTION	TERM.
1	O	EMERG. PR. 4 OUT	19B
2	O	OFFSET 3 OUT	9B
3	I	OFFSET 4 (ADD BIT 3)	13D
4	I	ON LINE	9D
5	O	SPARE	7C
6	I	DIAL 4	3D
7	I	DIAL 6	NC
8	O	SPECIAL FUNCTION 2 OUT	10C
9	I	SPLIT 3	8D
10	I	OFFSET 2 (ADD BIT 1)	5D
11	O	FLASH OUT	12C
12	I	OFFSET 1 (ADD BIT 0)	4D
13	I	SYSTEM DET. 8	20C
14	I	DIAL 3	5C
15	O	SPECIAL FUNCTION 3 OUT	15D
16	I	SPLIT 2	7D
17	I	SYSTEM DET. 1 (SEQ. #1)	13C
18	I	SYSTEM DET. 4 (SEQ. #4)	18C
19	I	SYSTEM ENABLE	14D
20	I	DIMMING ENABLE	1C
21	O	SPLIT 2 OUT	7E
22	O	EMERG. PR. 2 OUT	17B
23	O	RAILROAD PR. OUT	15B
24	O	SPARE	11C
25	I	DIAL 2 (SPECIAL FUNCTION 2)	1D
26	O	FREE/COORD (SPECIAL FUNCTION 1)	4C
27	O	FREE/COORD OUT	8C
28	O	SPECIAL FUNCTION 1 OUT	9C
29	I	DIAL 4 OUT	3E
30	I	SYSTEM DET. 5	17C
31	I	SYSTEM DET. 3 (SEQ. #3)	15C
32	O	EMERG. PR. 1 OUT	16B
33	O	OFFSET 1 OUT	4E
34	O	EMERG. PR. 3 OUT	18B
35	I	DIAL 3 (SPECIAL FUNCTION 3)	2D
36	O	OFFSET 3 (ADD BIT 2)	6D
37	I	FLASH STATUS	2C
38	I	OFFSET 5 (ADD BIT 4)	6C
39	I	SYSTEM DET. 6	18C
40	I	SYSTEM DET. 7	19C
41	O	OFFSET 4 OUT	16D
42	O	OFFSET 2 OUT	5E
43	O	DIAL 5 OUT	1E
44	O	DIAL 2 OUT	2E
45	O	OFFSET 5 OUT	17D
46	O	SPLIT 3 OUT	8E
47	I	SYSTEM DET. 2 (SEQ. #2)	14C
48	I	LOGIC GND.	20B
49	I	EMERG. PREEMPT 1	9B
50	I	EMERG. PREEMPT 2	7B
51	O	DIAL 5 OUT	18D
52	O	DIAL 6 OUT	19D
53		LOGIC GND.	9E
54		LOGIC GND.	20D
55	I	EMERG. PREEMPT 3	8B
56	I	EMERG. PREEMPT 4	9B
57	I	RAILROAD PREEMPT	2B
58	I	CONFLICT STATUS	11B
59		RESERVED	12B
60	I	FLASH COMMAND	3C
61		RESERVED	10B
62		RESERVED	NC
63		CHASSIS GND.	NC

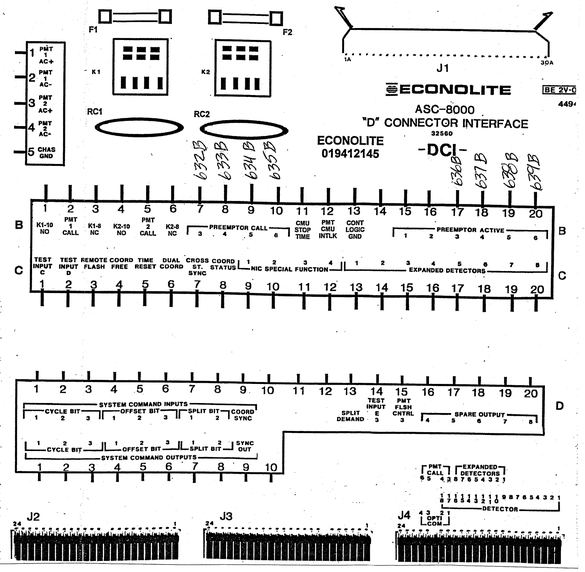

4th CONNECTOR TERMINATION BLOCK

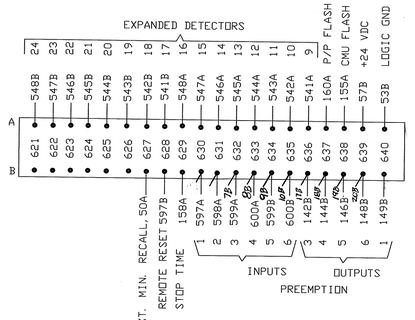

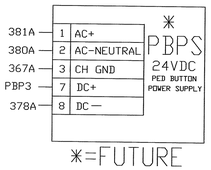

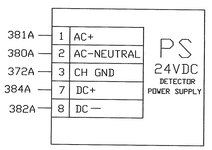

SA

DETECTORS AND PPB ISOLATION

⊕ SA1 THROUGH SA7 ARE WIRED TO ACCEPT VEH DET. OR EVP DISCRIMINATOR OR PPB ISOLATOR.

☒ Pin 10 of the edge conn. can be jumpered for use as CH4 delay inhibit. Jumpering will disable addressing.

			SA1			SA2			SA3			SA4			SA5			SA6			SA7				SA8	FUNCTIONS 1-CALL&EXTEND 2-CALL ONLY 3-EXTEND ONLY 4-CALL ONLY DENS 5-DLY CALL ONLY 6-DLY CALL ONLY	PED ISOLATOR PIN
			PHASE	FUNC	DET	PHASE	FUNC	DET	PHASE	FUNC	DET	PHASE	FUNC	DET	PHASE	FUNC	DET	PHASE	FUNC	DET	PHASE	FUNC	POLE	CONTR. CH	PPB ISOLATION	
		CH 1	1	1	1-1	2	1	2-1	4	5	4-1	3	8	3-1	3	7	3-3				1-6 Evp	2	1	2	DENSITY
		CH 2	1	1	1-2	2	1	2-2	4	5	4-2	3	1	3-2	3	1	3-4				2-5 Evp	4	2	4	CH 1
		CH 3	5	1	5-1	6	1	6-1													3 Evp	3	3	6	CH 2
		CH 4	5	1	5-2	6	1	6-2																8	CH 3
MAIN I/O BLOCK	WIRE COLOR	SA I/O BLOCK EDGE CONN.		MODEL	604			604			602T			602T			602T				Evp			244	CH 4
1	BLK/YEL	—	A	DC GROUND	382B																			NC	MODEL
2	RED	—	B	24V DC+	384B																			NC	SPARE A
3	BLK/BLU	—	C	REMOTE RESET	597B																			NC	SPARE B
	BRN	3	D-4	CH 1 LOOP	303A	345A		313A	355A		323A	365A		333A	301A										SPARE C
	WHT/BRN	4	E-5	CH 1 LOOP	304A	346A		314A	356A		324A	366A		334A	379A										INPUT CH 1 D
			6	ADDRESS BIT#0		SA1-15		SA2-10	SA3-15		SA4-15	SA5-10		SA6-15	NC										INPUT COMMON E
	WHT/BLU	5	F	CH 1 OUTPUT (+)	561B	563B		565B	567B		569B	571B		573B	577B										
	BLUE	6	H	CH 1 OUTPUT (-)	501B	505B		509B	513B		517B	521B		525B	529B										OUTPUT CH 1 (+) F
	BLK/RED	7	J-8	CH 2 LOOP	306A	348A		316A	358A		326A	368A		336A	302A										OUTPUT CH 1 (-) H
	BLK/WHT	8	K-9	CH 2 LOOP	307A	349A		317A	359A		327A	369A		337A	379B										INPUT CH 2 J
			10	ADDRESS BIT# 1		SA1-6		SA3-6	SA4-6		SA4-10	SA5-15		SA7-6	NC										INPUT COMMON K
12	GREEN	—	L	CHASSIS GROUND	340A																				
15	WHITE	—	M	AC-	SA2-M																			380B	CHASSIS GROUND L
13	BLACK	—	N	115V AC+	SA2-N																			381A	AC-(NEUTRAL) M
	ORANGE	9	P-13	LOOP CH 3	308A	350A		318A	360A		328A	370A		338A	343A										115V AC+ N
	WHT/OR	10	R-14	LOOP CH 3	309A	351A		319A	361A		329A	371A		339A	379B										INPUT CH 3 P
			15	ADDRESS BIT#2	SA1-10	SA2-6		SA2-15	SA3-10		SA5-6	SA6-10		SA7-10	NC										INPUT COMMON R
	WHT/GRY	11	S	CH 3 OUTPUT (+)	562B	564B		566B	568B		570B	572B		574B	579B										
	GREY	12	T	CH 3 OUTPUT (-)	503B	507B		511B	515B		519B	523B		527B	531B										OUTPUT CH 3 (+) S
	YELLOW	13	U-17	CH 4 LOOP	311A	353A		321A	363A		331A	373A		341A	344A										OUTPUT CH 3 (-) T
	WHT/YEL	14	V-18	CH 4 LOOP	312A	354A		322A	364A		332A	374A		342A	379A										INPUT CH 4 U
			19	DATA TRANSMIT											NC										INPUT COMMON V
			21	DATA RECEIVE											NC										
	WHT/VIO	15	W	CH 2 OUTPUT (+)	601B	603B		605B	607B		609B	611B		613B	578B										
	VIOLET	16	X	CH 2 OUTPUT (-)	502B	506B		510B	514B		518B	522B		526B	530B										OUTPUT CH 2 (+) W
	WHT/GRN	17	Y	CH 4 OUTPUT (+)	602B	604B		606B	608B		610B	612B		614B	580B										OUTPUT CH 2 (-) X
	WHT/BLK	18	Z	CH 4 OUTPUT (-)	504B	508B		512B	516B		520B	524B		528B	532B										OUTPUT CH 4 (+) Y
	WHT/RED	1	1	CH 1 GREEN	554A	555A		556A	557A		558A	559A		560A	——										OUTPUT CH 4 (-) Z
	RED	2	2	CH 2 GREEN	554B	555B		556B	557B		558B	559B		560B	——										SPARE
																									SPARE

REV.	STATUS
SHEET	1 2 3
REV	

REV	DATE	REVISION

DATE 10/31/01
BRAVN MPD

FOR: MNDOT

ACT Electronics, Inc.

#23 AT MARKETPLACE DR

TITLE: MNDOT 2002 "R" & "P" CABINET

SIZE D | PART#

PROPRIETARY INFORMATION OF ACT ELECTRONICS CORPORATION IS INCLUDED IN THE INFORMATION DISCLOSED IN THIS DOCUMENT. NEITHER THIS DOCUMENT, NOR THE INFORMATION DISCLOSED HEREIN, SHALL BE REPRODUCED OR TRANSFERRED TO OTHER DOCUMENTS OR USED FOR ANY PURPOSE NOT SPECIFICALLY AUTHORIZED IN WRITING BY ACT ELECTRONICS CORPORATION.

SCALE | FILE ACTDRP3 | REV | SHEET 3 OF 3