	LS	1	2	3	4	5	6	7	8	9	10	11	12
	CONT Ø	1	2	3	4	5	6	7	8	2P	4P	6P	8P
	PLAN Ø												
IN	GREEN / WALK	10	62A	69A	76A	82A	102A	109A	116A	122A	72A	85A	112A	125A
IN	YELLOW/PED CLR	8	63A	70A	77A	83A	103A	110A	117A	123A	142B	144B	146B	148B
IN	RED/DON'T WALK	6	64A	71A	78A	84A	104A	111A	118A	124A	73A	86A	113A	126A
OUT	GREEN / WALK	7	201A	207A	213A	219A	225A	231A	237A	243A	249A	255A	261A	267A
OUT	YELLOW	5	FP1-13	FP2-13	FP3-13	FP4-13	FP5-13	FP6-13	FP7-13	FP8-13	251A	257A	263A	269A
OUT	RED/DON'T WALK	3	FP1-1	FP2-1	FP3-1	FP4-1	FP5-1	FP6-1	FP7-1	FP8-1	253A	259A	265A	271A
POWER	+24 VDC	9	LS2-9	LS1-9 LS3-9	LS2-9 LS4-9	LS3-9 LS5-9	LS4-9 LS6-9 K13-7	LS5-9 LS7-9	LS6-9 LS8-9	LS7-9 LS9-9	LS8-9 LS10-9	LS9-9 LS11-9	LS10-9 LS12-9	LS11-9 60B
POWER	CHASSIS GROUND	2	LS2-2	LS1-2 LS3-2	LS2-2 LS4-2	LS3-2 LS5-2	LS4-2 LS6-2	LS5-2 LS7-2	LS6-2 LS8-2	LS7-2 LS9-2	LS8-2 LS10-2	LS9-2 LS11-2	LS10-2 LS12-2	LS11-2 GB3
POWER	AC COMMON	11	NB3 LS1-11	NB3	NB3	NB3	NB3	NB3	NB3	NB3	NB3	NB3	NB3	NB3
POWER	115 VAC	1	SB1	SB1	SB1	SB1	SB1	SB1	SB1	SB1	SB1	SB1	SB1	SB1

LOAD SWITCH PANEL ASSEMBLY (REAR VIEW)

TYPICAL ALL LOAD SWITCH BASES

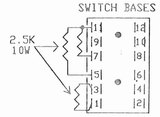

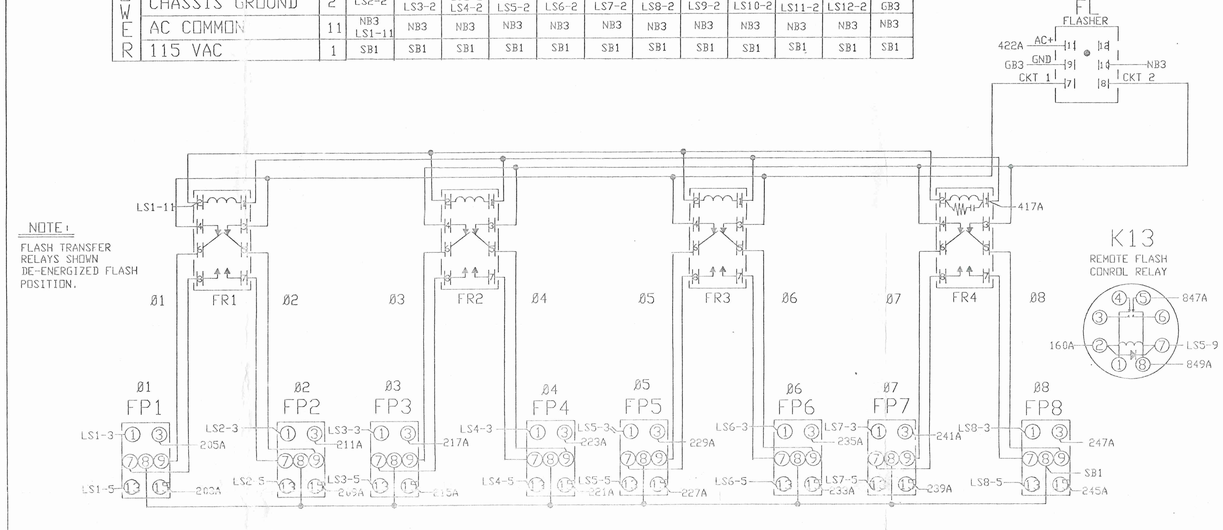

NOTE:
FLASH TRANSFER RELAYS SHOWN DE-ENERGIZED FLASH POSITION.

FLASH PLUG JUMPERING

RED	1+7 3+9 13+5
YEL	1+3 7+3 9+5
WHT	1+8

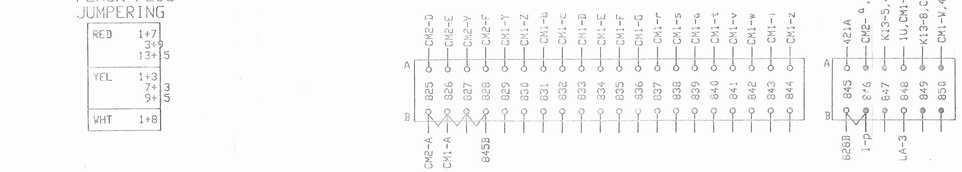

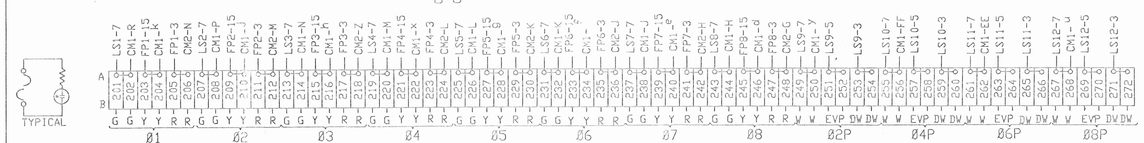

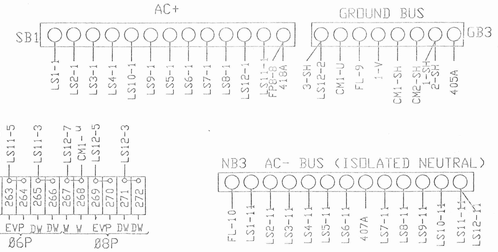

NEMA+ 12CH CONFLICT MONITOR

CM1

SHL	SHELL GROUND	GB3
AL	AC +1	826B
BL	RELAY 1 NO	148A
CL	RELAY 2 NC	141A
DL	CH 12 GRN	833A
EL	CH 11 GRN	834A
FL	CH 10 GRN	835A
GL	CH 9 GRN	836A
HL	CH 8 GRN 08	244A
JL	CH 7 GRN 07	238A
KL	CH 6 GRN 06	232A
LL	CH 5 GRN 05	226A
ML	CH 4 GRN 04	220A
NL	CH 3 GRN 03	214A
PL	CH 2 GRN 02	208A
RL	CH 1 GRN /01	202A
SL	+24 MONITOR	59B
TL	LOGIC GROUND	53B
UL	CHASSIS GROUND	SHELL
VL	AC-	848A
WL	RELAY 1 COMMON (AC+)	850A
XL	RELAY 2 COMMON (LG)	54B
YL	CH 12 YEL	829A
ZL	CH 11 YEL	830A
aL	CH 10 WK	839A
bL	CH 10 YEL	831A
cL	CH 9 YEL	832A
dL	CH 8 YEL 08	246A
eL	CH 7 YEL 07	240A
fL	CH 6 YEL 06	234A
gL	CH 5 YEL 05	228A
hL	CH 3 YEL 03	216A
iL	CH 3 WK	843A
jL	CH 2 YEL 02	210A
kL	CH 1 YEL /01	204A
mL	CONT. VOLT. MON.	52B
nL	*24V MONITOR INHIBIT	1001B
pL	RELAY 1 NC	849A
qL	RELAY 2 NO	157A
rL	CH 12 WK	837A
sL	CH 11 WK	838A
tL	CH 9 WK	840A
uL	CH 8 WK 08	268A
vL	CH 7 WK	841A
wL	CH 5 WK	842A
xL	CH 4 YEL 04	222A
yL	CH 2 WK 02	250A
zL	CH 1 WK	844A
AAL	SPARE 1	142A
BBL	RESET	1004B
CCL	CAB INTERLOCK A	1003B
DDL	CAB INTERLOCK B	1002B
EEL	CH 6 WK 06	262A
FFL	CH 4 WK 04	256A
GGL	SPARE 2	143A
HHL	SPARE 3	144A

CM2

SHL	SHELL GROUND	GB3
AL	AC+ 11	825B
BL	DELAY RELAY COMM	55B
CL	DELAY RELAY NO	6A
DL	CH 12 RED	825A
EL	CH 11 RED	826A
FL	CH 9 RED	828A
GL	CH 8 RED 08	248A
HL	CH 7 RED 07	242A
JL	CH 6 RED 06	236A
KL	CH 5 RED 05	230A
LL	CH 4 RED 04	224A
ML	CH 2 RED 02	212A
NL	CH 1 RED /01	206A
PL	SPARE 1	145A
RL	+24 V MONITOR 11	58B
SL	SPARE 2	146A
TL	SPARE 3	147A
UL	DELAY RELAY NC	1005B
VL	CH 10 RED	827A
WL	SPARE 4	1006B
XL	SPARE 5	1007B
YL	SPARE 6	1008B
ZL	CH 3 RED 03	218A
aL	RED ENABLE	846A
bL	SPARE 7	1009B
cL	SPARE 8	1010B

CONFLICT MONITOR MATRIX PROGRAMMING INSTRUCTIONS

1-2 2-3 3-4 4-5 5-6 6-7 7-8 8-9 9-10 10-11 11-12
1-3 2-4 3-5 4-6 5-7 6-8 7-9 8-10 9-11 10-12
1-4 2-5 3-6 4-7 5-8 6-9 7-10 8-11 9-12
1-5 2-6 3-7 4-8 5-9 6-10 7-11 8-12
1-6 2-7 3-8 4-9 5-10 6-11 7-12
1-7 2-8 3-9 4-10 5-11 6-12
1-8 2-9 3-10 4-11 5-12
1-9 2-10 3-11 4-12
1-10 2-11 3-12
1-11 2-12
1-12

CH1- Ø 1
CH2- Ø 2
CH3- Ø 3
CH4- Ø 4
CH5- Ø 5
CH6- Ø 6
CH7- Ø 7
CH8- Ø 8
CH9- Ø ___
CH10- Ø ___
CH11- Ø ___
CH12- Ø ___

CHANNEL-Ø COMBINATIONS NOT PINNED WITH MATRIX JUMPERS CONSTITUTE CONFLICTING MOVEMENTS. TO PROGRAM, CIRCLE PERMISSIVE COMBINATIONS AND INSTALL JUMPERS ON CORRESPONDING PINS ON THE PROGRAM CARD.

POWER PANEL ASSEMBLY (FRONT VIEW)

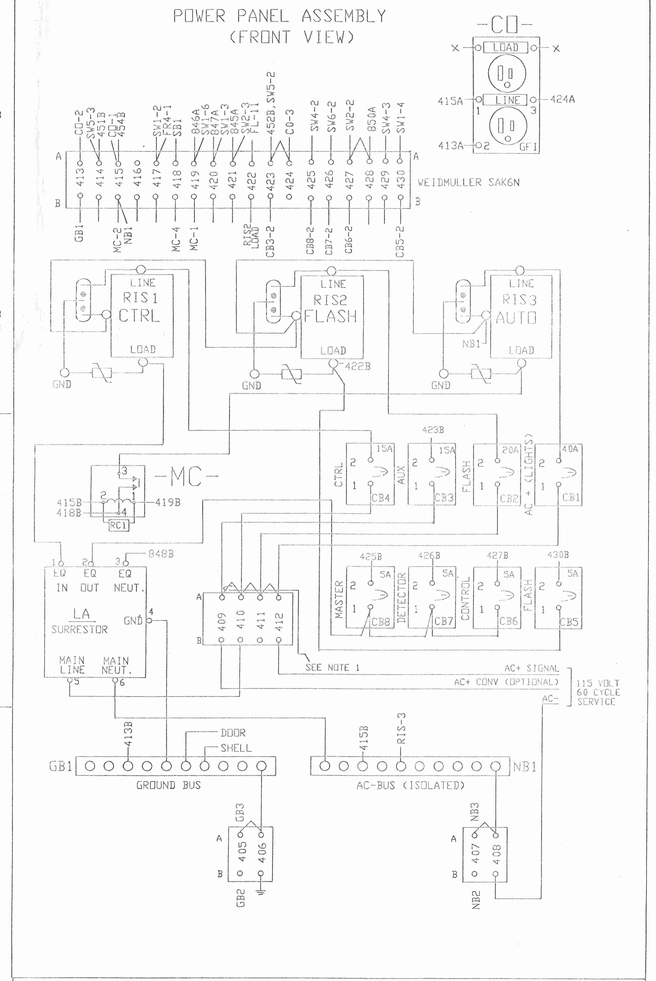

NOTES

1) IF A SIGNAL SERVICE CABINET IS USED REMOVE JUMPER 409A, 410A, CONV AC+.

2) IF EVP HEADS ARE INSTALLED JUMPER 363A TO 365A AND / OR 375A TO 377A

TIGHTENING TORQUE SPECIFICATIONS

SCREW SIZE	6-32	8-32	10-32
POUND INCHES	12	16	25.9

WEIDMULLER

BLOCK TYPE	SAK6S	SAK6N	SAK35N
POUND INCHES	10.5	16	35

REV	DESCRIPTION

VEHICLE SIGNALS

SIGNAL	TERMINAL G	Y	R	G←	Y←	R←
1-1	231	233	235	201	203	
2-1	206	208	210			
2-2	207	209	211			
3-1	243	245	247	213	215	
3-2	244	246	248	214	216	
4-1	219	221	223			
4-2	220	222	224			
5-1	207	209	211	225	227	
6-1	232	234	236			
6-2	231	233	235			
8-1	244	246	248			
8-2	243	245	247			

VEH DETECTORS

DET	TERMINAL
D1-1	303-304
D5-1	306-307
D4-1	345-346
D4-2	348-349
D3-1	313-314
D8-1	316-317

PED SIGNALS

SIGNAL	TERMINAL WK	DW
P2-1	249	253
P2-2	250	254
P4-1	255	259
P4-4	256	260
P6-3	261	265
P6-4	262	266
P8-2	267	271
P8-3	268	272

PED PUSHBUTTONS

PPB	TERMINAL
PB2-1,2	301
PB4-1,4	302
PB6-3,4	343
PB8-2,3	344

EVP TYPICAL SENSOR WIRE COLORS

SIGNAL	DC(+)	GND
YEL	ORG	BLU
CLR	RED	BLK
WHT	RED	BLK

EVP SENSORS

CONTR. CHAN.	PHASES	POLE #	SIGNAL	DC(+)	GND
2	Ø1-6	3	333	334	337
3	Ø2-5	1	336	334	337
4	Ø3-8	2	338	339	342
5	Ø4	4	341	339	342

EVP CONFIRMATORY LIGHTS

CONTR. CHAN.	PHASES	POLE #	TERM
2	Ø1-6	3	251
3	Ø2-5	1	257
4	Ø3-8	2	263
5	Ø4	4	269

REV. STATUS OF SHEETS					
SHEET	1	2	3		
REV	D	D	D		

DRAWN BY-
CHECKED BY-

REV-D
DRAWING NO.

ACT ELECTRONICS

CONT.,( ) LOAD RELAY, NEMA+ CONFLICT MONITOR,( ) LOOP DETECTORS
NEMA FLASHER

1992

FIFTH & MAIN

SHEET NO. 1 OF 3

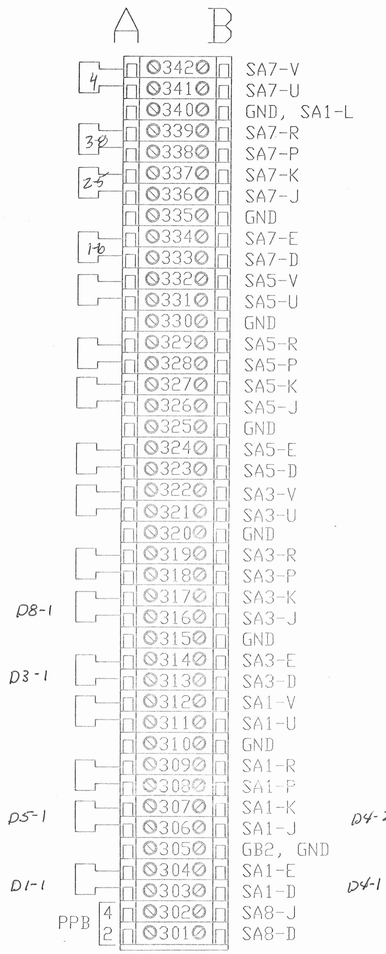

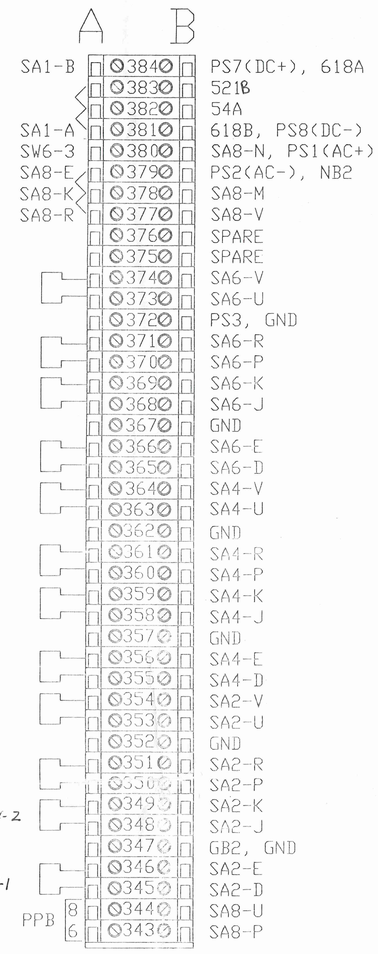

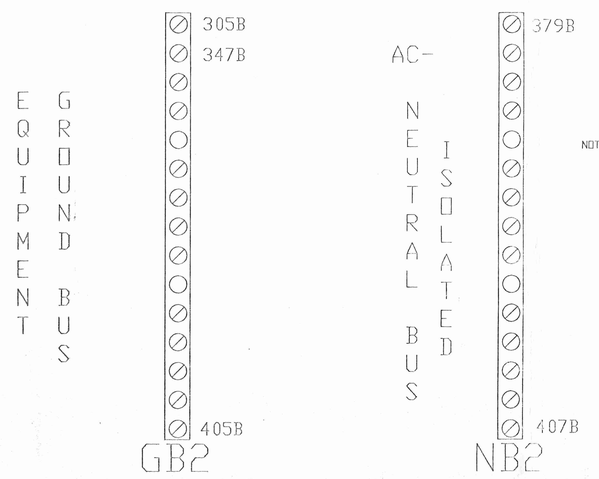

NOTE: 305, 310, 315, 320, 325, 330, 335, 340, 347, 352, 357, 362 AND 372 ARE INTERCONNECTED THROUGH THE WEIDMULLER RATL.

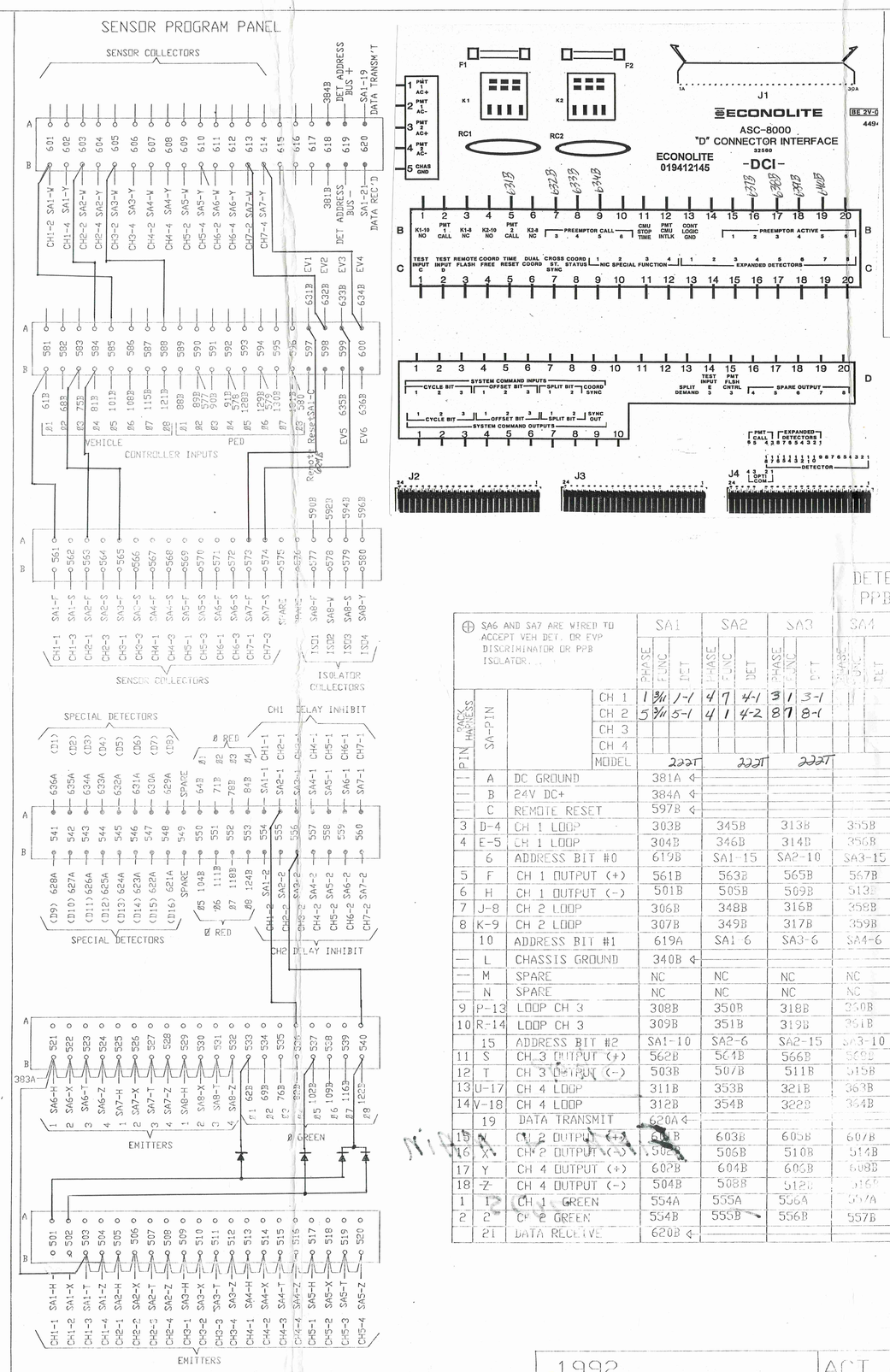

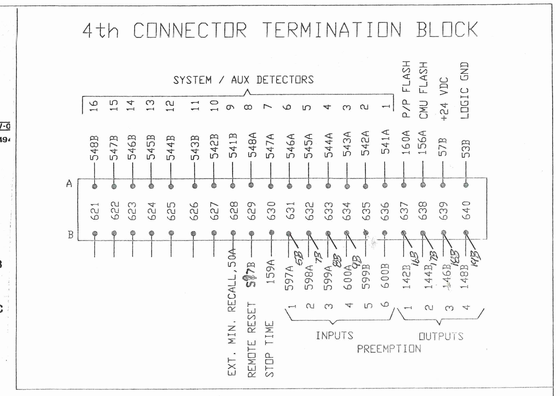

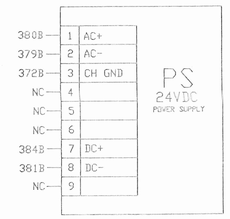

SA

DETECTORS AND PPB ISOLATION

⊕ SA6 AND SA7 ARE WIRED TO ACCEPT VEH DET. OR EVP DISCRIMINATOR OR PPB ISOLATOR...

PIN	PACK HARNESS SA-PIN			SA1 PHASE	SA1 FUNC	SA1 DET	SA2 PHASE	SA2 FUNC	SA2 DET	SA3 PHASE	SA3 FUNC	SA3 DET	SA4 PHASE	SA4 FUNC	SA4 DET	SA5 PHASE	SA5 FUNC	SA5 DET	⊕SA6 PHASE	⊕SA6 FUNC	⊕SA6 DET	⊕SA7 PHASE	⊕SA7 FUNC	⊕SA7 DET	SA8 PPB ISOLATION PHASE	FUNCTIONS		
			CH 1	1	3/4	1-1	4	7	4-1	3	1	3-1													2	CH 1	1-CALL&EXTEND 2-CALL ONLY 3-EXTEND ONLY 4-CALL ONLY DENS 5-DLY CALL ONLY 6-DLY CALL ONLY DENSITY 7-DLY CALL IMMED EXTEND 8-CARRY OVER 9-ADVISORY 10-SAMPLING 11-Each Carrying Ø B only	
			CH 2	5	3/4	5-1	4	1	4-2	8	7	8-1													4	CH 2		
			CH 3																						6	CH 3		
			CH 4																						8	CH 4		
			MODEL		222T			222T			222T														T-400A	MODEL		
1	A	DC GROUND			381A																				NC	SPARE		A
—	B	24V DC+			384A																				NC	SPARE		B
—	C	REMOTE RESET			597B																				NC	SPARE		C
3	D-4	CH 1 LOOP			303B			345B			313B			355B			323B			365B			333B		301B	INPUT CH 1		D
4	E-5	CH 1 LOOP			304B			346B			314B			356B			324B			366B			334B		379A	INPUT COMMON		E
	6	ADDRESS BIT #0			619B			SA1-15			SA2-10			SA3-15			SA4-15			SA5-10			SA6-15		NC			
5	F	CH 1 OUTPUT (+)			561B			563B			565B			567B			569B			571B			573B		577B	OUTPUT CH 1 (+)		F
6	H	CH 1 OUTPUT (-)			501B			505B			509B			513B			517B			521B			525B		529B	OUTPUT CH 1 (-)		H
7	J-8	CH 2 LOOP			306B			348B			316B			358B			326B			368B			336B		302B	INPUT CH 2		J
8	K-9	CH 2 LOOP			307B			349B			317B			359B			327B			369B			337B		378A	INPUT COMMON		K
	10	ADDRESS BIT #1			619A			SA1-6			SA3-6			SA4-6			SA4-10			SA5-15			SA7-6		NC			
—	L	CHASSIS GROUND			340B																					CHASSIS GROUND		L
—	M	SPARE			NC			NC			NC			NC			NC			SA7/SA8			SA6/SA8		SA7/378B	AC-		M
—	N	SPARE			NC			NC			NC			NC			NC			SA7/SA8			SA6/SA8		SA7/380B	115V AC+		N
9	P-13	LOOP CH 3			308B			350B			318B			360B			328B			370B			338B		343B	INPUT CH 3		P
10	R-14	LOOP CH 3			309B			351B			319B			361B			329B			371B			339B		377A	INPUT COMMON		R
	15	ADDRESS BIT #2			SA1-10			SA2-6			SA2-15			SA3-10			SA5-6			SA6-10			SA7-10		NC			
11	S	CH 3 OUTPUT (+)			562B			564B			566B			568B			570B			572B			574B		579B	OUTPUT CH 3 (+)		S
12	T	CH 3 OUTPUT (-)			503B			507B			511B			515B			519B			523B			527B		531B	OUTPUT CH 3 (-)		T
13	U-17	CH 4 LOOP			311B			353B			321B			363B			331B			373B			341B		344B	INPUT CH 4		U
14	V-18	CH 4 LOOP			312B			354B			322B			364B			332B			374B			342B		377B	INPUT COMMON		V
	19	DATA TRANSMIT			620A																				NC			
15	W	CH 2 OUTPUT (+)			502B			504B			506B			508B			510B			512B			514B		578B	OUTPUT CH 2 (+)		W
16	X	CH 2 OUTPUT (-)			506B			508B			510B			512B			514B			516B			518B		530B	OUTPUT CH 2 (-)		X
17	Y	CH 4 OUTPUT (+)			602B			604B			606B			608B			610B			612B			614B		580B	OUTPUT CH 4 (+)		Y
18	Z	CH 4 OUTPUT (-)			504B			508B			512B			516B			520B			524B			528B		532B	OUTPUT CH 4 (-)		Z
1	1	CH 1 GREEN			554A			555A			556A			557A			558A			559A			560A		—	SPARE		
2	2	CH 2 GREEN			554B			555B			556B			557B			558B			559B			560B		—	SPARE		
	21	DATA RECEIVE			620B																				NC			

FIFTH & MAIN

1992 | ACT | REV-D | SHEET NO. 3 OF 3