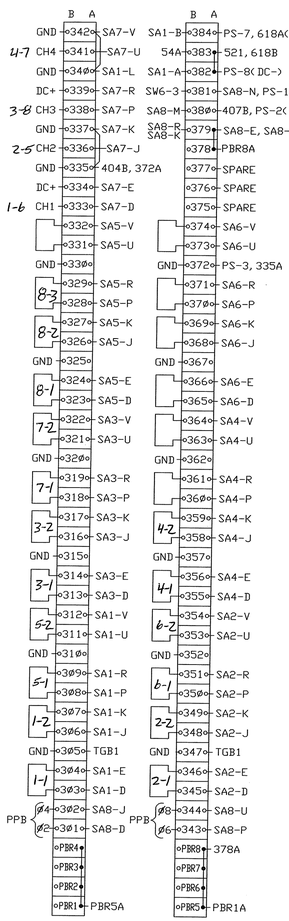

NOTE: 305, 310, 315, 320, 325, 330, 335, 340, 347, 352, 357, 362, 367 AND 372 ARE INTERCONNECTED BY THE WIEDMULLER MOUNTING RAIL.

JUMPERS 335A-337A AND 340A-342A, ARE TO BE ADDED AS NEEDED FOR EVP.

LOAD SWITCH PANEL ASSEMBLY

LS	1	2	3	4	5	6	7	8	9	1Ø	11	12	13	14
CONT Ø	1	2	3	4	5	6	7	8	2P	4P	6P	8P		
PLAN Ø														
IN: GREEN / WALK	1Ø	62A	69A	76A	82A	1Ø2A	1Ø9A	116A	122A	72A	85A	112A	125A	
IN: YELLOW/PED CLR	8	63A	7Ø A	77A	83A	1Ø3A	11ØA	117A	123A	142B	144B	146B	148B	
IN: RED/DON'T WALK	6	64A	71A	78A	84A	1Ø4A	111A	118A	124A	73A	86A	113A	126A	
OUT: GREEN / WALK	7	2Ø1A	2Ø7A	213A	219A	225A	231A	237A	243A	249A	255A	261A	267A	
OUT: YELLOW	5	FP1-13	FP2-13	FP3-13	FP4-13	FP5-13	FP6-13	FP7-13	FP8-13	251A	257A	263A	269A	
OUT: RED/DON'T WALK	3	FP1-1	FP2-1	FP3-1	FP4-1	FP5-1	FP6-1	FP7-1	FP8-1	253A	259A	265A	271A	
POWER: +24 VDC	9	◁					K13-7						▷6ØB	
POWER: CHASSIS GROUND	2	◁												▷GB1
POWER: AC NEUTRAL	11	NB1 FR1-2	NB1	NB1	NB1	NB1	NB1	NB1	NB1	NB1	NB1	NB1	NB1	NB1
POWER: 115 VAC	1	SB1	SB1	SB2	SB2	SB1	SB1	SB2	SB2	SB1	SB2	SB1	SB2 FP8-8	

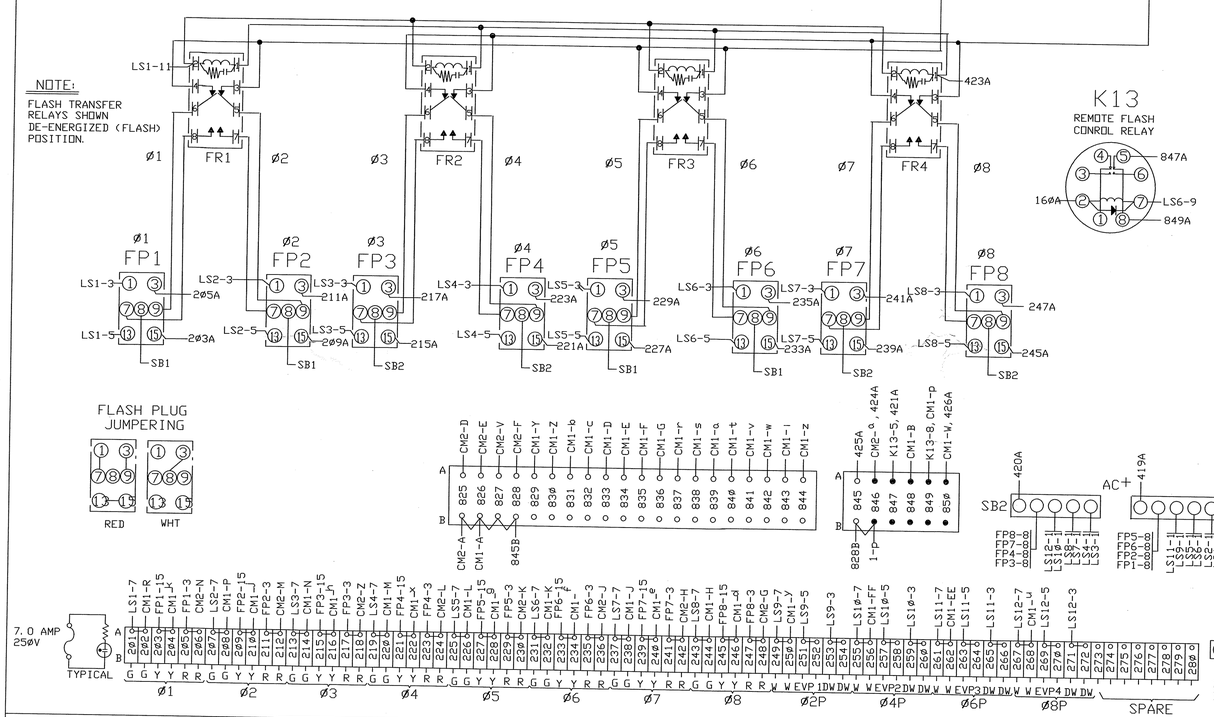

NEMA #12CH CONFLICT MONITOR

CM1

SH	SHELL GROUND	GB1
AL	AC+I	826B
BL	RELAY 1 NO	848A
CL	RELAY 2 NC	141A
DL	CH 12 GRN	833A
EL	CH 11 GRN	834A
FL	CH 1Ø GRN	835A
GL	CH 9 GRN	836A
HL	CH 8 GRN Ø8	244A
JL	CH 7 GRN Ø7	238A
KL	CH 6 GRN Ø6	232A
LL	CH 5 GRN Ø5	226A
ML	CH 4 GRN Ø4	22ØA
NL	CH 3 GRN Ø3	214A
PL	CH 2 GRN Ø2	2Ø8A
RL	CH 1 GRN/Ø1	2Ø2A
SL	+24V MONITOR I	59B
TL	LOGIC GROUND	53B
UL	CHASSIS GROUND	SHELL
VL	AC-(NEUTRAL)	NB1
WL	RELAY 1 COMMON(AC+)	85ØA
XL	RELAY 2 COMMON (LG)	54B
YL	CH 12 YEL	829A
ZL	CH 11 YEL	83ØA
aL	CH 1Ø WK	839A
bL	CH 1Ø YEL	831A
cL	CH 9 YEL	832A
dL	CH 8 YEL Ø8	246A
eL	CH 7 YEL Ø7	24ØA
fL	CH 6 YEL Ø6	234A
gL	CH 5 YEL Ø5	228A
hL	CH 3 YEL Ø3	216A
iL	CH 3 WK	843A
jL	CH 2 YEL Ø2	21ØA
kL	CH 1 YEL Ø1	2Ø4A
mL	CONT. VOLT. MON.	52B
nL	+24V MONITOR INHIBIT	1Ø1B
pL	RELAY 1 NC	849A
qL	RELAY 2 NO	156A
rL	CH 12 WK	837A
sL	CH 11 WK	838A
tL	CH 9 WK	84ØA
uL	CH 8 WK Ø8	268A
vL	CH 7 WK	841A
wL	CH 5 WK	842A
xL	CH 4 YEL Ø4	222A
yL	CH 2 WK Ø2	25ØA
zL	CH 1 WK	844A
AAL	SPARE 1	142A
BBL	RESET	1ØØ4B
CCL	CAB INTERLOCK A	1ØØ3B
DDL	CAB INTERLOCK B	1ØØ2B
EEL	CH 6 WK Ø6	262A
FFL	CH 4 WK Ø4	256A
GGL	SPARE 2	143A
HHL	SPARE 3	144A

CM2

AL	AC+II	
BL	DELAY RELAY COMM	825B
CL	DELAY RELAY NO	55B
DL	CH 12 RED	6A
EL	CH 11 RED	825A
FL	CH 9 RED	826A
GL	CH 8 RED Ø8	828A
HL	CH 7 RED Ø7	248A
JL	CH 6 RED Ø6	242A
KL	CH 5 RED Ø5	236A
LL	CH 4 RED Ø4	23ØA
ML	CH 2 RED Ø2	224A
NL	CH 1 RED Ø1	212A
PL	SPARE 1	2Ø6A
RL	+24V MONITOR II	145A
SL	SPARE 2	58B
TL	SPARE 3	146A
UL	DELAY RELAY NC	147A
VL	CH 1Ø RED	1ØØ5B
WL	SPARE 4	827A
XL	SPARE 5	1ØØ6B
YL	SPARE 6	1ØØ7B
ZL	CH 3 RED Ø3	1ØØ8B
aL	RED ENABLE	218A
bL	SPARE 7	846A
cL	SPARE 8	1ØØ9B
		1Ø1ØB

CONFLICT MONITOR MATRIX PROGRAMMING INSTRUCTIONS

1-2 2-3 3-4 4-5 5-6 6-7 7-8 8-9 9-1Ø 1Ø-11 11-12
1-3 2-4 3-5 4-6 5-7 6-8 7-9 8-1Ø 9-11 1Ø-12
1-4 2-5 3-6 4-7 5-8 6-9 7-1Ø 8-11 9-12
1-5 2-6 3-7 4-8 5-9 6-1Ø 7-11 8-12
1-6 2-7 3-8 4-9 5-1Ø 6-11 7-12
1-7 2-8 3-9 4-1Ø 5-11 6-12
1-8 2-9 3-1Ø 4-11 5-12
1-9 2-1Ø 3-11 4-12
1-1Ø 2-11 3-12
1-11 2-12
1-12

CH1-Ø 1
CH2-Ø 2
CH3-Ø 3
CH4-Ø 4
CH5-Ø 5
CH6-Ø 6
CH7-Ø 7
CH8-Ø 8
CH9-Ø
CH1Ø-Ø
CH11-Ø
CH12-Ø

CHANNEL-Ø COMBINATIONS NOT PINNED WITH MATRIX JUMPERS CONSTITUTE CONFLICTING MOVEMENTS. TO PROGRAM, CIRCLE PERMISSIVE COMBINATIONS AND INSTALL JUMPERS ON CORRESPONDING PINS ON THE PROGRAM CARD.

POWER PANEL ASSEMBLY (FRONT VIEW)

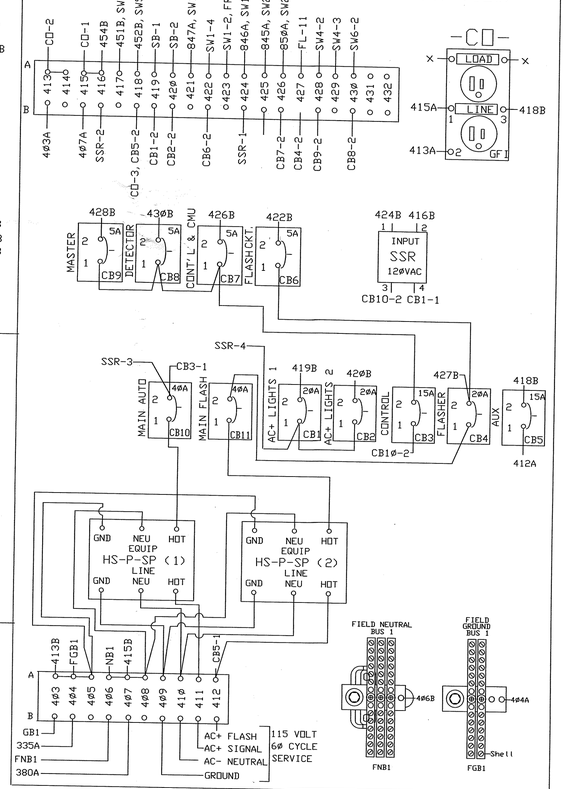

TIGHTENING TORQUE SPECIFICATIONS

SCREW SIZE	6-32	8-32	1Ø-32
POUND INCHES	12	16	25.9
BLOCK TYPE	SAK56	RK6-1Ø	SAK35N
POUND INCHES	1Ø.5	16	35
BLOCK TYPE	ZB35	ZB1Ø	
POUND INCHES	35.5	17.75	

VEHICLE SIGNALS

SIGNAL	TERMINAL ←G	←Y	←R	G	Y	R
1-1	201	203	205			
1-2	202	204	206			
2-1, 2-3				207	209	211
2-2				208	210	212
4-1				219	221	223
4-2				220	222	224
4-3	237	239		219	221	223
4-4	238	240		220	222	224
5-1	225	227	229			
5-2	226	228	230			
6-1, 6-3				231	233	235
6-2				232	234	236
8-1				243	245	247
8-2				244	246	248
8-3	213	215		243	245	247
8-4	214	216		244	246	248

SIGNAL HEAD NEUTRALS TO BE TERMINATED ON FNB1

VEH DETECTORS

DET	TERMINAL
1-1	303-304
1-2	306-307
2-1	345-346
2-2	348-349
3-1	313-314
3-2	316-317
4-1	355-356
4-2	358-359
5-1	308-309
5-2	311-312
6-1	350-351
6-2	353-354
7-1	318-319
7-2	321-322
8-1	323-324
8-2	326-327
8-3	328-329

PED SIGNALS

SIGNAL	TERMINAL WK	DW
2-1	249	253
2-2	250	254
4-1	255	259
4-2	256	260
6-1	261	265
6-2	262	266

PED HEAD NEUTRALS TO BE TERMINATED ON FNB1

PED PUSHBUTTONS

PPB	TERMINAL
PB 2-1, 2-2	301
PB 4-1, 4-2	302
PB 6-1, 6-2	343

NOTES

1) IF EVP HEADS ARE INSTALLED JUMPER 367B TO 369B AND / OR 335B TO 337B

EVP SENSORS

CONTR. CHAN.	PHASES	POLE #	SIGNAL	DC(+)	GND
1	1-6	3	333	334	337
2	2-5	1	336	334	337
3	3-8	4	338	339	342
4	4-7	2	341	339	342

EVP CONFIRMATORY LIGHTS

CONTR. CHAN.	PHASES	POLE #	TERM
1	1-6	3	251
2	2-5	1	257
3	3-8	4	263
4	4-7	2	269

EVP TYPICAL SENSOR WIRE COLORS

SIGNAL	DC(+)	GND
YEL	ORG	BLU
CLR	RED	BLK
WHT	RED	BLK

REV.	DATE	REVISION

DATE 8/25/99
DRAWN MPD

ACT Electronics, Inc.

#23 AT APOLLO DR

01021

REV. STATUS			
SHEET	1	2	3
REV	A	A	A

FOR ANOKA

TITLE MNDOT 1999 "R" & "P" CABINET

SIZE D PART# SCALE

PROPRIETARY INFORMATION OF ACT ELECTRONICS CORPORATION IS INCLUDED IN THE INFORMATION DISCLOSED ON TO DOCUMENT. NEITHER THIS DOCUMENT, NOR THE INFORMATION DISCLOSED HEREON, SHALL BE REPRODUCED OR TRANSFERRED TO OTHER DOCUMENTS FOR USE OTHER THAN USED FOR ANY PURPOSE NOT SPECIFICALLY AUTHORIZED IN WRITING BY ACT ELECTRONICS CORPORATION.

FILE ACT99091 REV A SHEET 1 OF 3

CONTROLLER INTERFACE PANEL

1		2		3	
SH	SHELL GROUND 1-V	A	Ø1 PHASE NEXT 21B	A	STATUS BIT A2 18B
A	RESV. 6B	B	SPARE 1 29A	B	STATUS BIT B2 19B
B	24VDC+ 59A	C	Ø2 PHASE NEXT 22B	C	Ø8 DWK 126A
C	VOLTAGE MONITOR 52A	D	Ø3 GRN 76A	D	Ø8 RED 124A
D	Ø1 RED 64A	E	Ø3 YEL 77A	E	Ø7 YEL 117A
E	Ø1 DWK 66A	F	Ø3 RED 78A	F	Ø7 RED 118A
F	Ø2 RED 71A	G	Ø4 RED 84A	G	Ø6 RED 111A
G	Ø2 DWK 73A	H	Ø4 PCL 1ØØ4A	H	Ø5 RED 1Ø4A
H	Ø2 PCL 1ØØ2A	J	Ø4 DWK 86A	J	Ø5 YEL 1Ø3A
J	Ø2 WK 72A	K	Ø4 CHECK 24A	K	Ø5 PCL 1ØØ5A
K	Ø2 VEH DET 68A	L	Ø4 VEH DET 81A	L	Ø5 DWK 1Ø6A
L	Ø2 PED DET 89A	M	Ø4 PED DET 91A	M	Ø5 PHASE NEXT 25B
M	Ø2 HOLD 8B	N	Ø3 VEH DET 75A	N	Ø5 PHASE ON 37A
N	STOP TIMING 1 15A	P	Ø3 PED DET 9ØA	P	Ø5 VEH DET 1Ø1A
P	INHIBIT MAX TERM 1 9A	R	Ø3 PHASE OMIT 43A	R	Ø5 PED DET 128A
R	EXTERNAL START 6A	S	Ø2 PHASE OMIT 42A	S	Ø6 VEH DET 1Ø8A
S	INTERVAL ADVANCE 19A	T	Ø5 PED OMIT 37B	T	Ø6 PED DET 129A
T	INDICATOR LAMP CONT 2ØA	U	Ø1 PHASE OMIT 41A	U	Ø7 PED DET 13ØA
U	AC- NEUTRAL NB1	V	PED RECYCLE 2 132A	V	Ø7 VEH DET 115A
V	CHASSIS GROUND GB1	W	SPARE 2 29B	W	Ø8 PED DET 131A
W	LOGIC GROUND 53A	X	SPARE 3 3ØA	X	Ø8 HOLD 14B
X	FLASH LOGIC OUT 5A	Y	Ø3 WK 79A	Y	FORCE OFF 2 8A
Y	STATUS BIT C1 17B	Z	Ø3 PCL 1ØØ3A	Z	STOP TIME 2 16A
Z	Ø1 YEL 63A	a	Ø3 DWK 8ØA	a	INHIBIT MAX TERM 2 1ØA
a	Ø1 PCL 1ØØ1A	b	Ø4 GRN 82A	b	SPARE 1 31A
b	Ø2 YEL 7ØA	c	Ø4 YEL 83A	c	STATUS BIT C2 2ØB
c	Ø2 GRN 69A	d	Ø4 WALK 85A	d	Ø8 WK 125A
d	Ø2 CHECK 22A	e	Ø4 PHASE ON 36A	e	Ø8 YEL 123A
e	Ø2 PHASE ON 34A	f	Ø4 PHASE NEXT 24B	f	Ø7 GRN 116A
f	Ø1 VEH DET 61A	g	Ø4 PHASE OMIT 44A	g	Ø6 GRN 1Ø9A
g	Ø1 PED DET 88A	h	Ø4 HOLD 1ØB	h	Ø6 YEL 11ØA
h	Ø1 HOLD 7B	i	Ø3 HOLD 9B	i	Ø5 GRN 1Ø2A
i	FORCE OFF 1 7A	j	Ø3 PED OMIT 35B	j	Ø5 WK 1Ø5A
j	EXT MIN RECALL ALL/Ø 5ØA	k	Ø6 PED OMIT 38B	k	Ø5 CHECK 25A
k	MAN. CONTROL ENABLE 4A	m	Ø7 PED OMIT 39B	m	Ø5 HOLD 11B
m	CALL TO NON-ACT I 17A	n	Ø8 PED OMIT 4ØB	n	Ø5 PHASE OMIT 45A
n	TEST INPUT A 1B	p	DL A YEL 96A	p	Ø6 HOLD 12B
p	AC+ CONTROL 846B	q	DL A RED 97A	q	Ø6 PHASE OMIT 46A
q	SPARE 1 3B	r	Ø3 CHECK 23A	r	Ø7 PHASE OMIT 47A
r	STATUS BIT B1 16B	s	Ø3 PHASE ON 35A	s	Ø8 PHASE OMIT 48A
s	Ø1 GRN 62A	t	Ø3 PHASE NEXT 23B	t	Ø8 VEH DET 121A
t	Ø1 WK 65A	u	DL D RED 14ØA	u	RED REST MODE 2 14A
u	Ø1 CHECK 21A	v	SPARE 4 3ØB	v	ØMIT RED CLR 2 12A
v	Ø2 PED OMIT 34B	w	DL D GRN 138A	w	Ø8 PCL 1ØØ8A
w	OMIT RED CLR 11A	x	Ø4 PED OMIT 36B	x	Ø8 GRN 122A
x	RED REST MODE 1 13A	y	SPARE 5 31B	y	Ø7 DWK 12ØA
y	SPARE 2 4B	z	MAX 2 SELECT 2 2A	z	Ø6 DWK 113A
z	CALL TO NON-ACT II 18A	AA	DL A GRN 95A	AA	Ø6 PCL 1ØØ6A
AA	TEST INPUT B 2B	BB	DL B YEL 99A	BB	Ø6 CHECK 26A
BB	WALK REST MODIFIER 3A	CC	DL B RED 1ØØA	CC	Ø6 PHASE ON 38A
CC	STATUS BIT A1 15B	DD	DL C RED 137A	DD	Ø6 PHASE NEXT 26B
DD	Ø1 PHASE ON 33A	EE	DL D YEL 139A	EE	Ø7 HOLD 13B
EE	Ø1 PED OMIT 33B	FF	DL C GRN 135A	FF	Ø8 CHECK 28A
FF	PED RECYCLE 1 92A	GG	DL B GRN 98A	GG	Ø8 PHASE ON 4ØA
GG	MAX 2 SELECT 1A	HH	DL C YEL 136A	HH	Ø8 PHASE NEXT 28B
HH	SPARE 3 5B			JJ	Ø7 WK 119A
				KK	Ø7 PCL 1ØØ7A
				LL	Ø6 WK 112A
				MM	Ø7 CHECK 27A
				NN	Ø7 PHASE ON 39A
				PP	Ø7 PHASE NEXT 27B

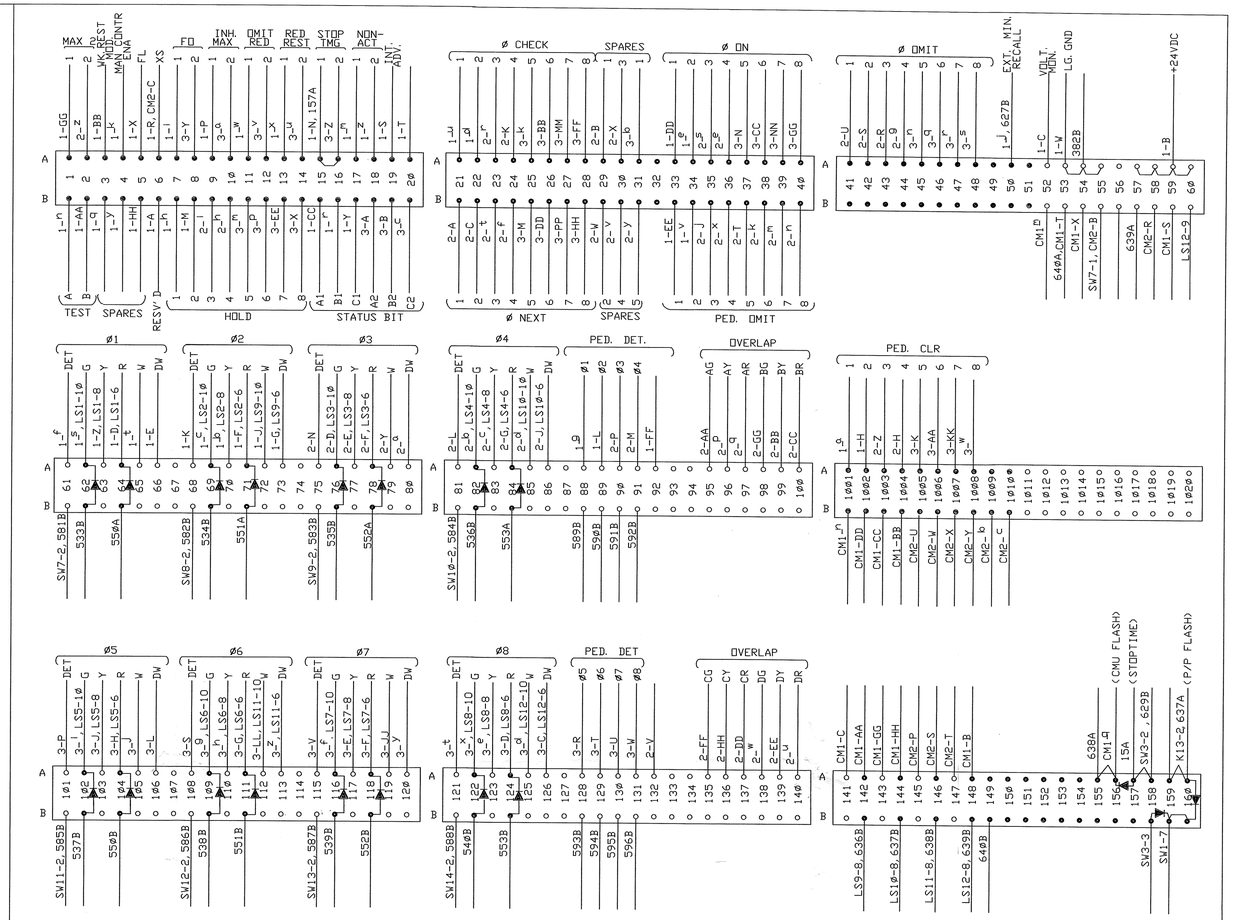

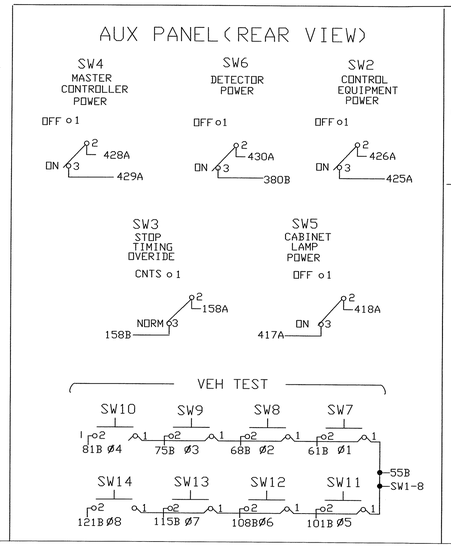

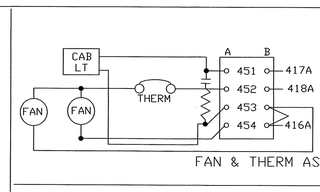

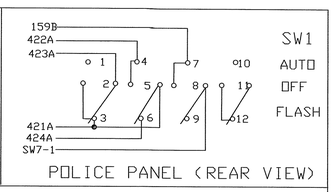

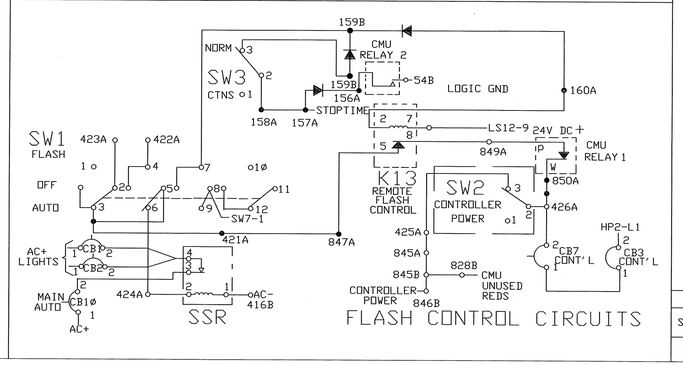

#23 AT APOLLO DR

REV	DATE	REVISION
B		Modify view of switches to rear view.

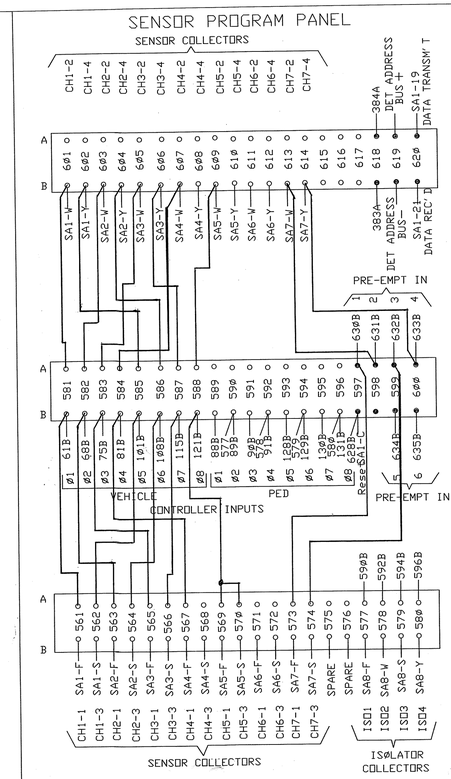

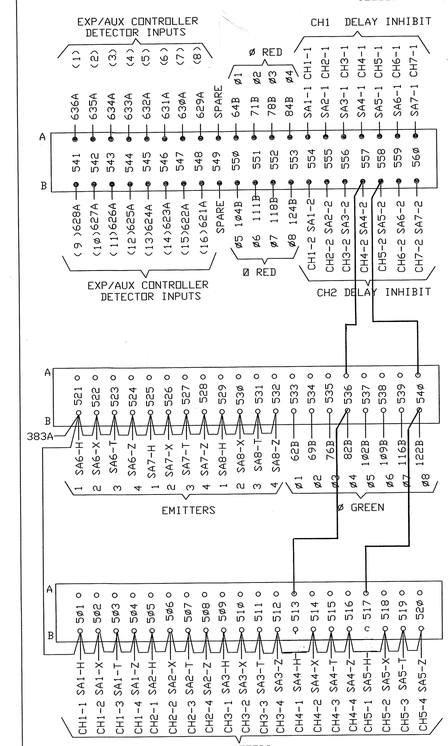

SPECIAL FUNCTION MODULE PIN ASSIGNMENT "D" CABLE 28022900-004			
CONN.		FUNCTION	TERM.
PIN	I/O		
1	O	EMERG. PR. 4 OUT	19B
2	O	OFFSET 3 OUT	6E
3	I	OFFSET 4 (ADD BIT 3)	13D
4	I	ON LINE	9D
5	O	SPARE	7C
6	I	DIAL 4	8D
7	I	DIAL 6	11C
8	O	SPECIAL FUNCTION 2 OUT	10C
9	I	SPLIT 3	8D
10	I	OFFSET 2 (ADD BIT 1)	5D
11	O	FLASH OUT	12C
12	I	OFFSET 1 (ADD BIT 0)	4D
13	I	SYSTEM DET. 8	20C
14	I	DIAL 3	5C
15	O	SPECIAL FUNCTION 3 OUT	15D
16	I	SPLIT 2	7D
17	I	SYSTEM DET. 1 (SEQ. #1)	13C
18	I	SYSTEM DET. 4 (SEQ. #4)	18C
19	I	SYSTEM ENABLE	14D
20	I	DIMMING ENABLE	1C
21	O	SPLIT 2 OUT	17B
22	O	EMERG. PR. 2 OUT	19B
23	O	RAILROAD PR. OUT	11C
24	O	SPARE	1D
25	I	DIAL 2 (SPECIAL FUNCTION 2)	2D
26	I	FREE/COORD (SPECIAL FUNCTION 1)	4C
27	O	FREE/COORD OUT	8C
28	O	SPECIAL FUNCTION 1 OUT	9C
29	O	DIAL 4 OUT	3E
30	I	SYSTEM DET. 5	17C
31	I	SYSTEM DET. 3 (SEQ. #3)	15C
32	O	EMERG. PR. 1 OUT	16B
33	O	OFFSET 1 OUT	4E
34	O	EMERG. PR. 3 OUT	18B
35	I	DIAL 3 (SPECIAL FUNCTION 3)	2D
36	I	OFFSET 3 (ADD BIT 2)	6D
37	I	FLASH STATUS	2C
38	I	OFFSET 2 (ADD BIT 4)	6C
39	I	SYSTEM DET. 6	18C
40	I	SYSTEM DET. 7	19C
41	O	OFFSET 4 OUT	16D
42	O	OFFSET 2 OUT	5E
43	O	DIAL 2 OUT	1E
44	O	DIAL 3 OUT	2E
45	O	OFFSET 5 OUT	17D
46	O	SPLIT 3 OUT	8E
47	I	SYSTEM DET. 2 (SEQ. #2)	14C
48		LOGIC GND.	20B
49	I	EMERG. PREEMPT 1	5B
50	I	EMERG. PREEMPT 2	7B
51	O	DIAL 5 OUT	18D
52	O	DIAL 6 OUT	19D
53		LOGIC GND.	9E
54		LOGIC GND	20D
55	I	EMERG. PREEMPT 3	8B
56	I	EMERG. PREEMPT 4	9B
57	I	RAILROAD PREEMPT	2B
58	I	CONFLICT STATUS	11B
59		RESERVED	12B
60	I	FLASH COMMAND	3C
61		RESERVED	10B
62		RESERVED	NC
63		CHASSIS GND.	NC.

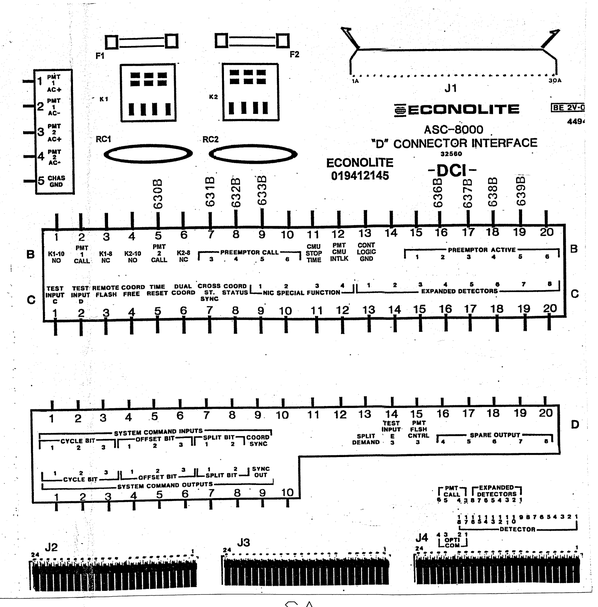

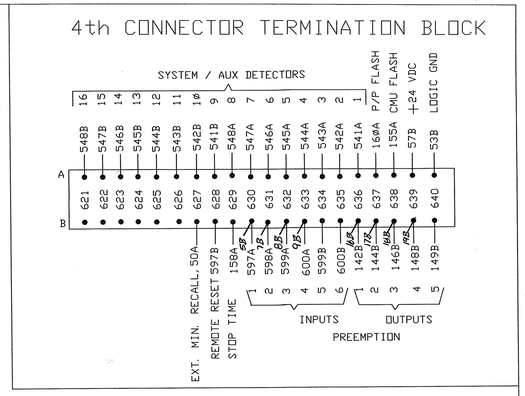

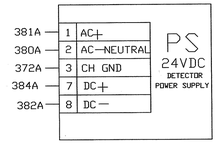

DETECTORS AND PPB ISOLATION

⊕ SA1 THROUGH SA7 ARE WIRED TO ACCEPT VEH DET. OR EVP DISCRIMINATOR OR PPB ISOLATOR.

☒ Pin 10 of the edge conn. can be jumpered for use as CH4 delay inhibit. Jumpering will disable addressing.

	SA1 PHASE	SA1 FUNC	SA1 DET	SA2 PHASE	SA2 FUNC	SA2 DET	SA3 PHASE	SA3 FUNC	SA3 DET	SA4 PHASE	SA4 FUNC	SA4 DET	SA5 PHASE	SA5 FUNC	SA5 DET	SA6 PHASE	SA6 FUNC	SA6 DET	SA7 PHASE	SA7 FUNC	SA7 DET	SA8 PPB ISOLATION PHASE	
CH 1	1	1	1-1	2	1	2-1	3	1	3-1	4	1/6	4-1	8	3/6	8-1								
CH 2	1	1	1-2	2	1	2-2	3	1	3-2	4	7	4-2	8	3/6	8-2								
CH 3	5	1	5-1	6	1	6-1	7	1	7-1				8	1	8-3								
CH 4	5	1	5-2	6	1	6-2	7	1	7-2														
MODEL	604			604			604			602T			602/602T						EVP		1-6	2	CH 1
																			EVP		2-5	4	CH 2
																			EVP		3-8	6	CH 3
																			EVP		4-7	8	CH 4
																			EVP			244	MODEL

FUNCTIONS
1-CALL&EXTEND
2-CALL ONLY
3-EXTEND ONLY
4-CALL ONLY-DENS
5-DLY CALL ONLY
6-DLY CALL ONLY DENSITY
7-DLY CALL IMMED EXTEND
8-CARRY OVER
9-ADVISORY
10-SAMPLING
11-SPECIAL
-SEE NOTE-

MAIN I/O BLOCK	WIRE COLOR	SA I/O BLOCK	EDGE CONN.															
1	BLK/YEL	—	A	DC GROUND	382B											NC	SPARE	A
2	RED	—	B	24V DC+	384B											NC	SPARE	B
3	BLK/BLU	—	C	REMOTE RESET	597B											NC	SPARE	C
	BRN	3	D-4	CH 1 LOOP	303A	345A	313A	355A	323A	365A	333A	301A	INPUT CH 1	D
	WHT/BRN	4	E-5	CH 1 LOOP	304A	346A	314A	356A	324A	366A	334A	379A	INPUT COMMON	E
5	ORANGE		6	ADDRESS BIT # 0	619B	SA1-15	SA2-10	SA3-15	SA4-15	SA5-10	SA6-15	NC		
	WHT/BLU	5	F	CH 1 OUTPUT (+)	561B	563B	565B	567B	569B	571B	573B	577B	OUTPUT CH 1 (+)	F
	BLUE		6	CH 1 OUTPUT (-)	501B	505B	509B	513B	517B	521B	525B	529B	OUTPUT CH 1 (-)	H
	BLK/RED	7	J-8	CH 2 LOOP	306A	348A	316A	358A	326A	368A	336A	302A	INPUT CH 2	J
	BLK/WHT	8	K-9	CH 2 LOOP	307A	349A	317A	359A	327A	369A	337A	379B	INPUT COMMON	K
6	YELLOW		10	ADDRESS BIT # 1	619A	SA1-6	SA3-6	SA4-6	SA4-10	SA5-15	SA7-6	NC		
12	GREEN	—	L	CHASSIS GROUND	340A								CHASSIS GROUND	L
15	WHITE	—	M	AC-	SA2-M							380B	AC-(NEUTRAL)	M
13	BLACK	—	N	115V AC+	SA2-N							381A	115V AC+	N
	ORANGE	9	P-13	LOOP CH 3	308A	350A	318A	360A	328A	370A	338A	343A	INPUT CH 3	P
	WHT/OR	10	R-14	LOOP CH 3	309A	351A	319A	361A	329A	371A	339A	379B	INPUT COMMON	R
			15	ADDRESS BIT # 2	SA1-10	SA2-6	SA2-15	SA3-10	SA5-6	SA6-10	SA7-10	NC		
	WHT/GRY	11	S	CH 3 OUTPUT (+)	562B	564B	566B	568B	570B	572B	574B	579B	OUTPUT CH 3 (+)	S
	GREY	12	T	CH 3 OUTPUT (-)	503B	507B	511B	515B	519B	523B	527B	531B	OUTPUT CH 3 (-)	T
	YELLOW	13	U-17	CH 4 LOOP	311A	353A	321A	363A	331A	373A	341A	344A	INPUT CH 4	U
	WHT/YEL	14	V-18	CH 4 LOOP	312A	354A	322A	364A	332A	374A	342A	379A	INPUT COMMON	V
8	GREY		19	DATA TRANSMIT	620A							NC		
10	VIOLET		21	DATA RECEIVE	620B							NC		
	WHT/VIO	15	W	CH 2 OUTPUT (+)	601B	603B	605B	607B	609B	611B	613B	578B	OUTPUT CH 2 (+)	W
	VIOLET	16	X	CH 2 OUTPUT (-)	502B	506B	510B	514B	518B	522B	526B	530B	OUTPUT CH 2 (-)	X
	WHT/GRN	17	Y	CH 4 OUTPUT (+)	602B	604B	606B	608B	610B	612B	614B	580B	OUTPUT CH 4 (+)	Y
	WHT/BLK	18	Z	CH 4 OUTPUT (-)	504B	508B	512B	516B	520B	524B	528B	532B	OUTPUT CH 4 (-)	Z
	WHT/RED	1	1	CH 1 GREEN	554A	555A	556A	557A	558A	559A	560A	—	SPARE	
	RED	2	2	CH 2 GREEN	554B	555B	556B	557B	558B	559B	560B	—	SPARE	

REV.	STATUS			
SHEET	1	2	3	
REV	A	A	A	

REV	DATE	REVISION

DATE 8/25/99
DRAWN MPD

ACT Electronics, Inc.

#23 AT APOLLO DR

TITLE MNDOT 1999 "R" & "P" CABINET

SIZE D | PART# | SCALE

FOR: MNDOT

PROPRIETARY INFORMATION OF ACT ELECTRONICS CORPORATION IS INCLUDED IN THE INFORMATION DISCLOSED IN THIS DOCUMENT. NEITHER THIS DOCUMENT, NOR THE INFORMATION DISCLOSED HEREIN, SHALL BE REPRODUCED OR TRANSFERRED TO OTHER DOCUMENTS FOR ANY PURPOSE OR USED FOR ANY PURPOSE NOT SPECIFICALLY AUTHORIZED IN WRITING BY ACT ELECTRONICS CORPORATION.

FILE ACT99RP3 | REV A | SHEET 3 OF 3